US009270719B2

(12) **United States Patent**
Chan

(10) **Patent No.: US 9,270,719 B2**
(45) **Date of Patent: *Feb. 23, 2016**

(54) **DEVICE CONNECTION PROXY THROUGH CLOUD TO OPTIMIZE NETWORK MESSAGES**

(71) Applicant: **NEXTBIT SYSTEMS INC.**, San Francisco, CA (US)

(72) Inventor: **Michael A. Chan**, San Francisco, CA (US)

(*) Notice: Subject to any disclaimer, the term of this patent is extended or adjusted under 35 U.S.C. 154(b) by 0 days.

This patent is subject to a terminal disclaimer.

(21) Appl. No.: **14/043,438**

(22) Filed: **Oct. 1, 2013**

(65) **Prior Publication Data**

US 2014/0095660 A1 Apr. 3, 2014

Related U.S. Application Data

(60) Provisional application No. 61/708,794, filed on Oct. 2, 2012.

(51) **Int. Cl.**
G06F 15/16 (2006.01)
H04L 29/06 (2006.01)
(Continued)

(52) **U.S. Cl.**
CPC ***H04L 65/60*** (2013.01); ***G06F 8/62*** (2013.01); ***G06F 8/63*** (2013.01); ***G06F 9/4406*** (2013.01); ***G06F 9/4416*** (2013.01); ***G06F 17/3007*** (2013.01); ***G06F 17/3015*** (2013.01); ***G06F 17/30085*** (2013.01); ***G06F 17/30091*** (2013.01); ***G06F 17/30194*** (2013.01); ***H04L 9/0825*** (2013.01); ***H04L 9/3226*** (2013.01); ***H04L 43/04*** (2013.01); ***H04L 65/4069*** (2013.01); ***H04L 67/10*** (2013.01); ***H04L 67/1095*** (2013.01); ***H04L 67/1097*** (2013.01); ***H04L 67/2823*** (2013.01); ***H04L 67/2842*** (2013.01);
(Continued)

(58) **Field of Classification Search**
CPC H04L 67/10
USPC 709/217
See application file for complete search history.

(56) **References Cited**

U.S. PATENT DOCUMENTS

6,075,994 A 6/2000 Bhat
7,865,089 B2 1/2011 Andreoli et al.
(Continued)

OTHER PUBLICATIONS

Co-Pending U.S. Appl. No. 14/042,507 by Chan, M.A. et al., filed Sep. 30, 2013.
(Continued)

Primary Examiner — David X Yi

(57) **ABSTRACT**

Technology is disclosed herein for optimizing network connections using proxy connections. According to at least one embodiment, a computing device receives requests for network connections with remote servers from multiple computer applications running on the computing device. The computing device further establishes a network connection with a proxy server. The proxy server initiates and maintains proxy network connections with the remote servers. The proxy server can delay at least one network message of the network messages received from the remote servers such that the proxy server sends the network messages to the computing device in a batch. The proxy server batches the network messages such that the computing device stays at a high power consumption state for a time period shorter than an overall time period for which the computing device would stay at the high power consumption if the network messages were sent individually without batching.

22 Claims, 8 Drawing Sheets

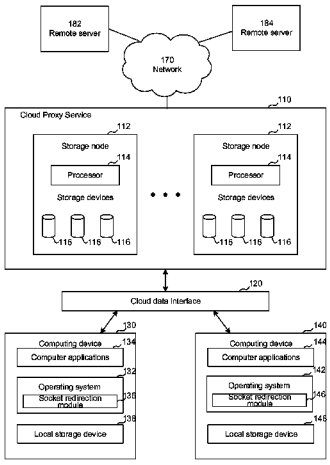

(51) **Int. Cl.**

G06F 17/30	(2006.01)
H04L 29/08	(2006.01)
H04L 12/26	(2006.01)
H04L 9/08	(2006.01)
H04L 9/32	(2006.01)
G06F 9/44	(2006.01)
G06F 9/445	(2006.01)
H04W 8/24	(2009.01)

(52) **U.S. Cl.**
CPC ***H04L67/40*** (2013.01); ***H04L 67/42*** (2013.01); ***H04W 8/24*** (2013.01); *G06F 17/30011* (2013.01); *G06F 17/30286* (2013.01); *Y02B 60/188* (2013.01)

(56) **References Cited**

U.S. PATENT DOCUMENTS

2009/0063193	A1*	3/2009	Barton et al.	705/3
2009/0143056	A1	6/2009	Tang et al.	
2010/0113159	A1*	5/2010	Chapman et al.	463/42
2012/0131184	A1	5/2012	Luna et al.	
2013/0073389	A1	3/2013	Heath	
2013/0110637	A1	5/2013	Bott	
2013/0212420	A1*	8/2013	Lawson et al.	713/400
2013/0238686	A1	9/2013	O'Donoghue et al.	
2013/0297704	A1	11/2013	Alberth, Jr. et al.	
2013/0304559	A1	11/2013	Stone et al.	
2014/0018033	A1	1/2014	Luna	
2014/0025524	A1	1/2014	Sims et al.	
2014/0031126	A1	1/2014	Nguyen	
2014/0047331	A1	2/2014	Feldman et al.	

OTHER PUBLICATIONS

Co-Pending U.S. Appl. No. 14/167,952 by Chan, M.A., filed Jan. 19, 2014.
Notice of Allowance mailed May 2, 2014, U.S. Appl. No. 14/167,952 by Chan, M.A., filed Jan. 19, 2014.
Co-Pending U.S. Appl. No. 14/197,121 by Chan, M.A. et al., filed Mar. 4, 2013.
Xu, Z-W., et al., "The Batch Patching Algorithm Using Dynamic Cache of Proxy for Streaming Media," Proceedings of 2005 International Conference on Machine Learning and Cybernetics, vol. 9, pp. 5532-5537 (Aug. 18-21, 2005).
Yeh, L-Y., et al., "A Batch-Authenticated and Key Agreement Framework for P2P-Based Online Social Networks," IEEE Transactions on Vehicular Technology, vol. 61, No. 4, pp. 1907-1924 (May 2012).
Yu, Z. and Ji, H., "A proxy agent cooperation framework," 2010 International Conference on Computer Application and System Modeling (ICCASM), vol. 9, pp. V9-578-V9-581 (Oct. 22-24, 2010).
Notice of Allowance mailed Mar. 19, 2015, for U.S. Appl. No. 14/267,748 by Chan, M.A., filed May 1, 2014.
Co-Pending U.S. Appl. No. 14/267,748 by Chan, M.A., filed May 1, 2014.
Notice of Allowance mailed Jun. 23, 2014 for U.S. Appl. No. 14/197,121 by Chan, M.A. et al., filed Mar. 4, 2013.
Non-Final Office Action mailed Sep. 2, 2014 for U.S. Appl. No. 14/267,748 by Chan, M.A. et al., filed May 1, 2014.
Non-Final Office Action mailed Oct. 8, 2015, for U.S. Appl. No. 14/042,507, of Chan, M.A., et al., filed Sep. 30, 2013.

* cited by examiner

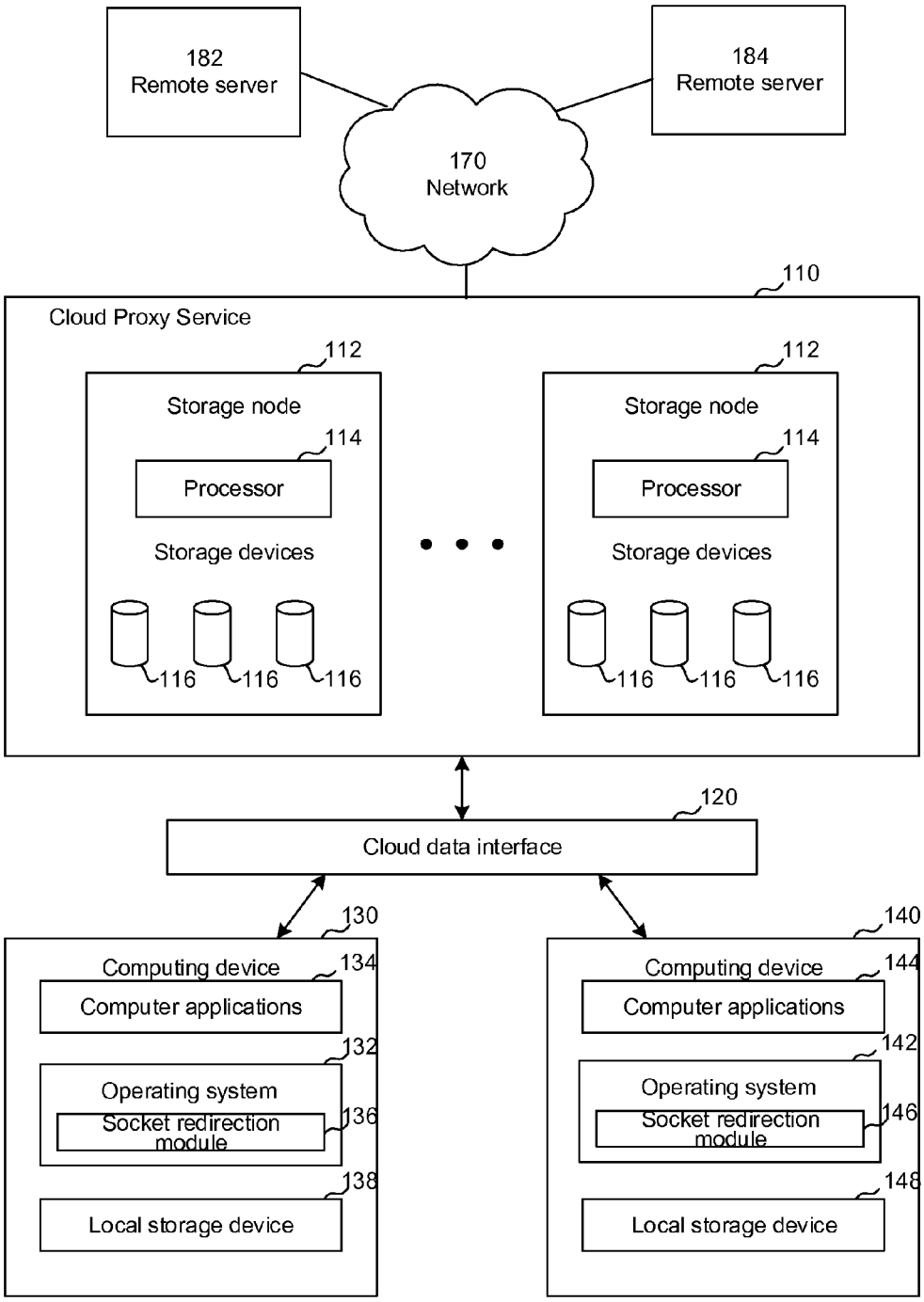
182
Remote server
184
Remote server
170
Network
110
Cloud Proxy Service
112
Storage node
114
Processor
Storage devices
116
116
116
112
Storage node
114
Processor
Storage devices
116
116
116
120
Cloud data interface
130
Computing device
134
Computer applications
132
Operating system
Socket redirection module
136
138
Local storage device
140
Computing device
144
Computer applications
142
Operating system
Socket redirection module
146
148
Local storage device

FIG. 1

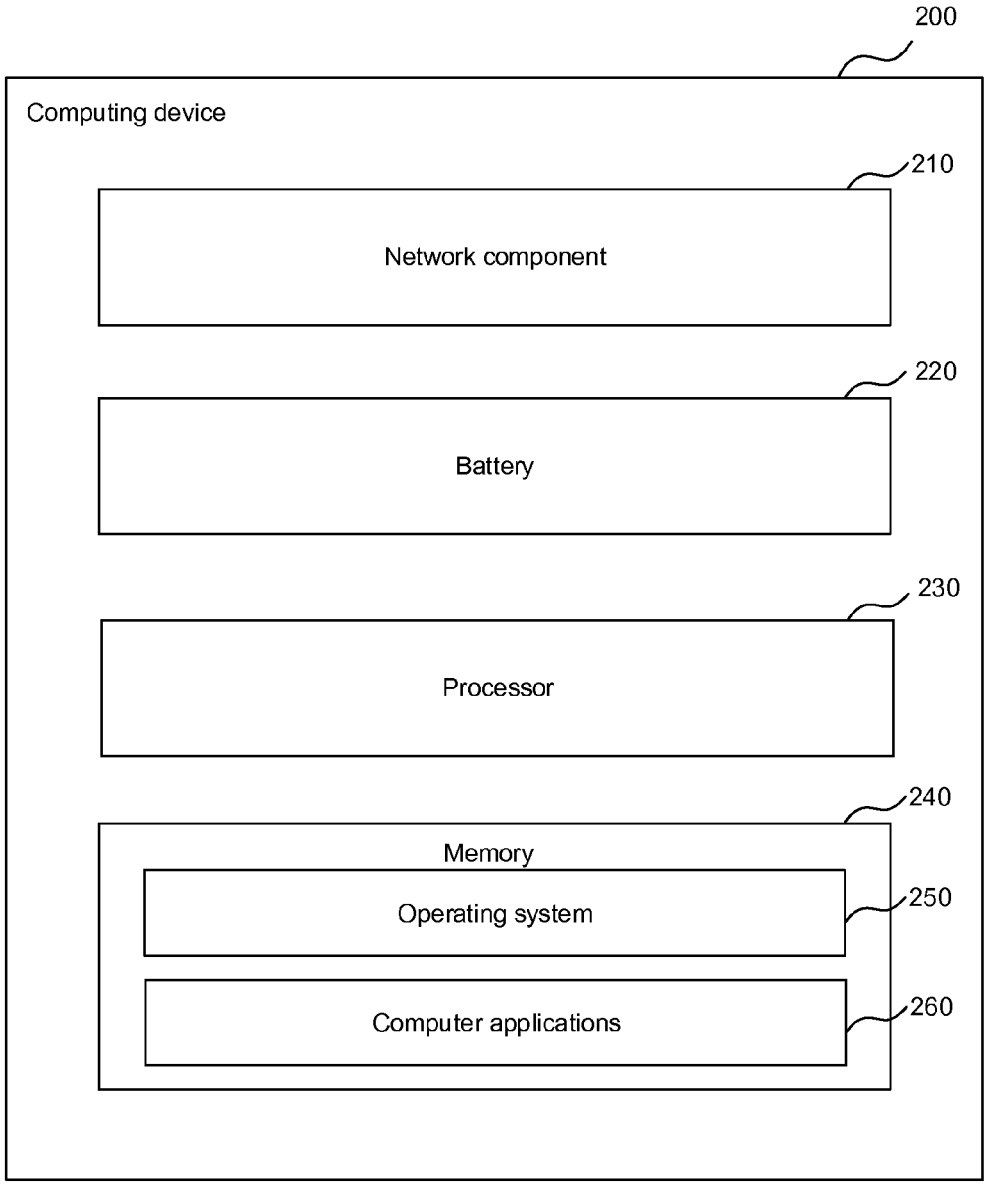
200
Computing device
210
Network component
220
Battery
230
Processor
240
Memory
Operating system
250
Computer applications
260

FIG. 2

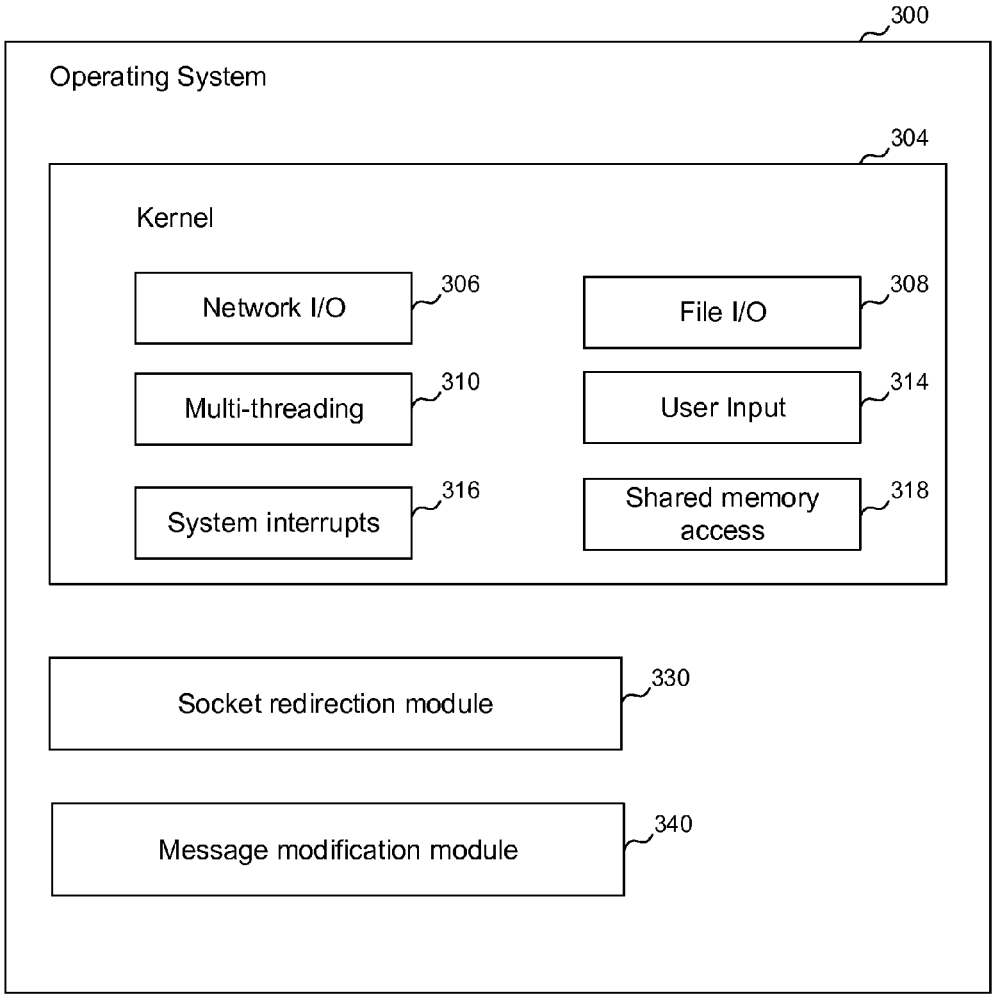
300
Operating System
304
Kernel
Network I/O
306
File I/O
308
Multi-threading
310
User Input
314
System interrupts
316
Shared memory access
318
Socket redirection module
330
Message modification module
340

FIG. 3

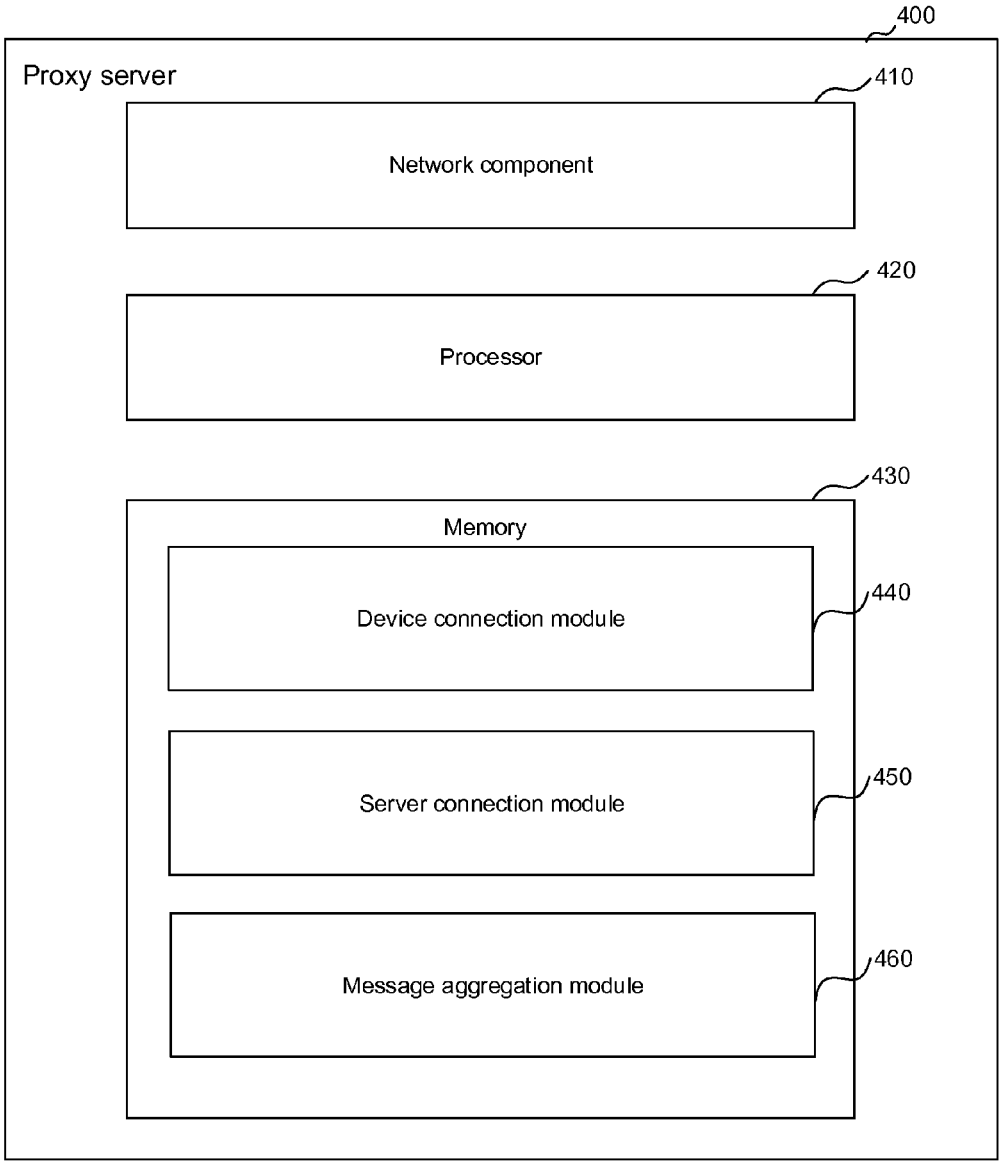
400
Proxy server
410
Network component
420
Processor
430
Memory
Device connection module
440
Server connection module
450
Message aggregation module
460

FIG. 4

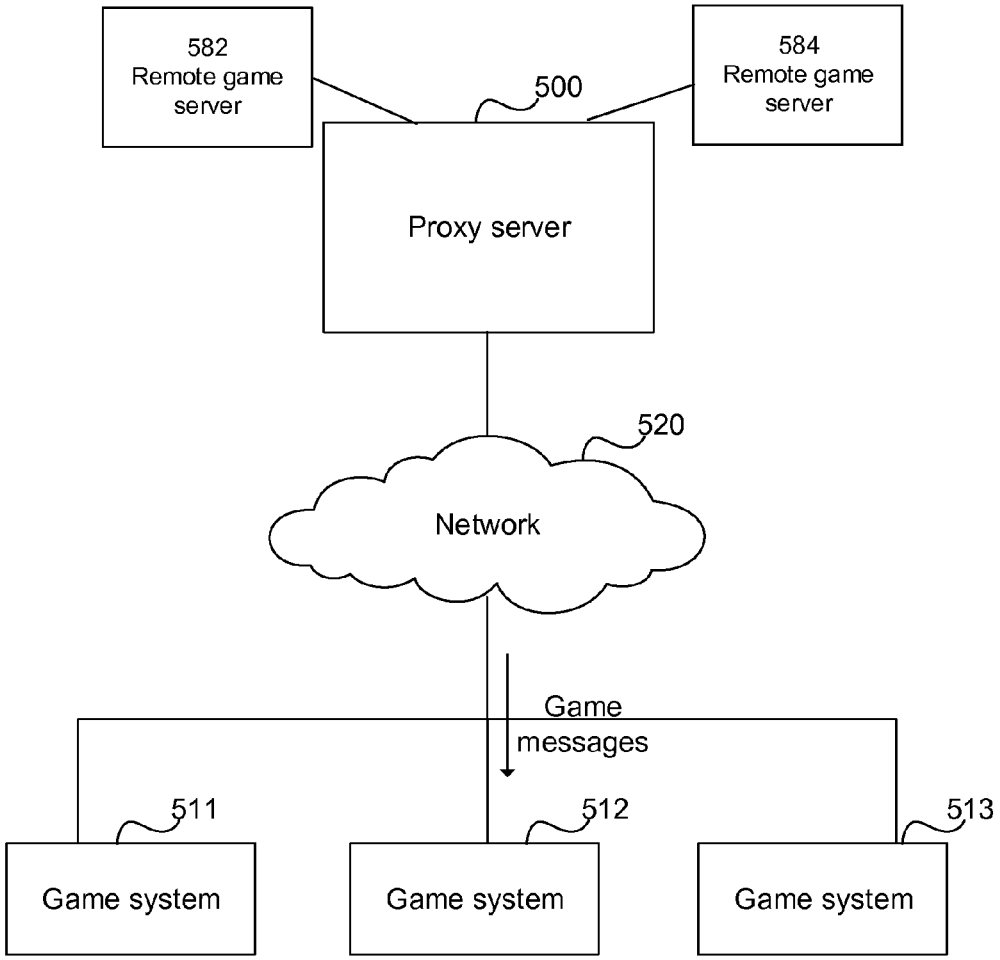
582
Remote game server
584
Remote game server
500
Proxy server
520
Network
Game messages
511
512
513
Game system
Game system
Game system

FIG. 5

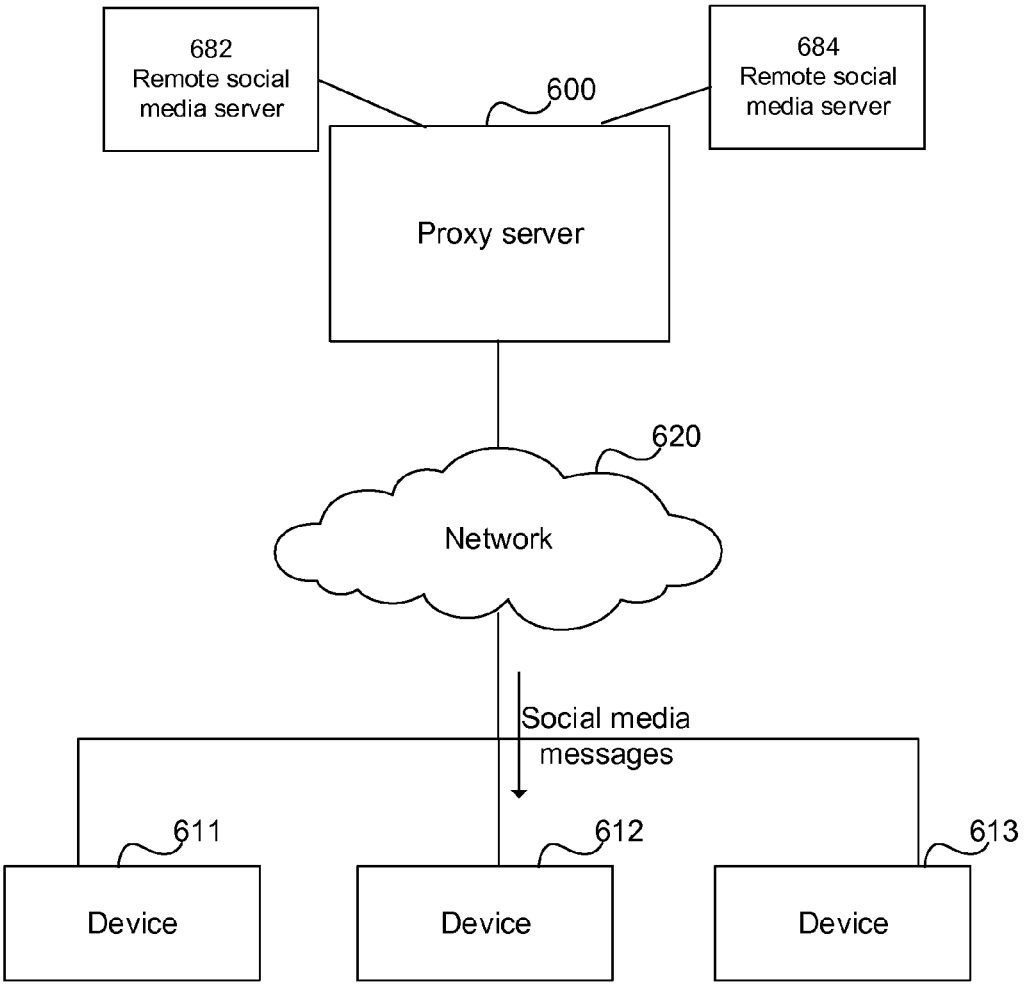
682
Remote social media server
684
Remote social media server
600
Proxy server
620
Network
Social media messages
611
612
613
Device
Device
Device

FIG. 6

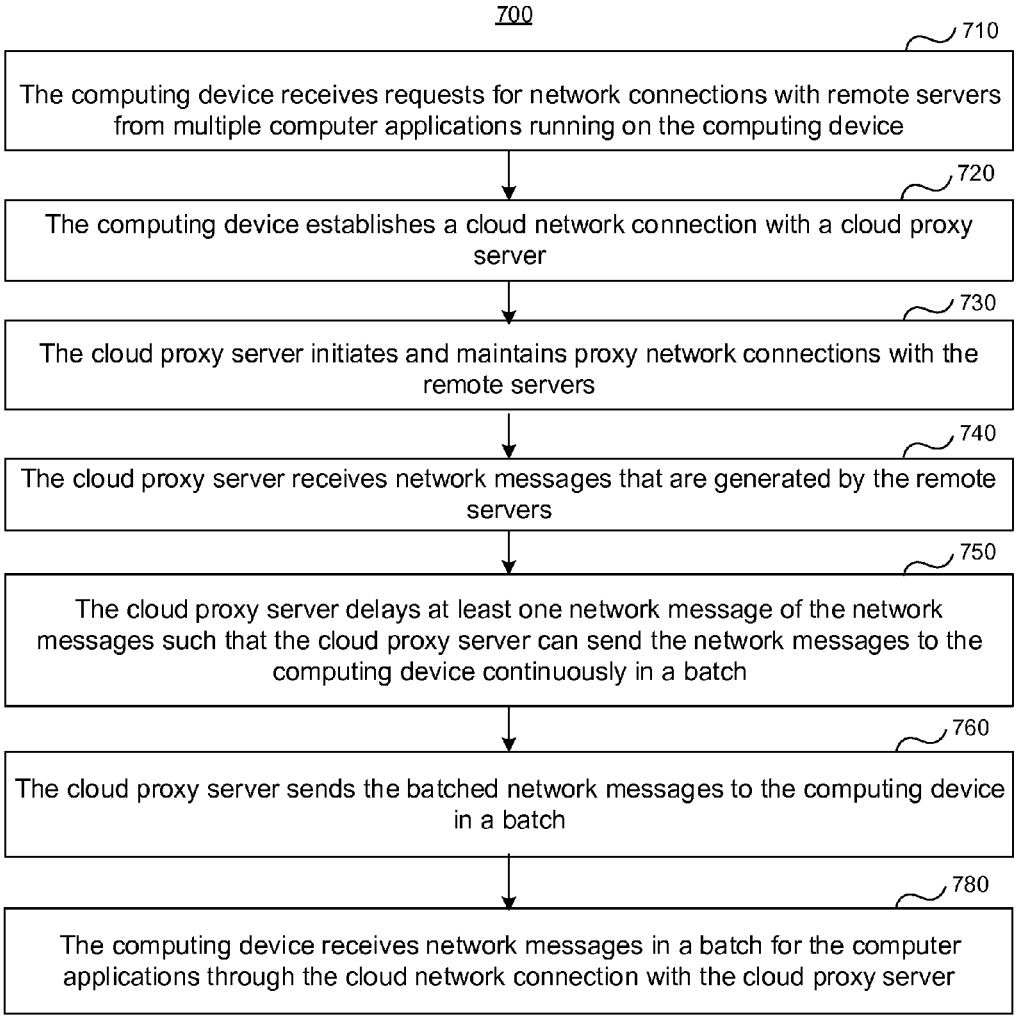
700
710
The computing device receives requests for network connections with remote servers from multiple computer applications running on the computing device
720
The computing device establishes a cloud network connection with a cloud proxy server
730
The cloud proxy server initiates and maintains proxy network connections with the remote servers
740
The cloud proxy server receives network messages that are generated by the remote servers
750
The cloud proxy server delays at least one network message of the network messages such that the cloud proxy server can send the network messages to the computing device continuously in a batch
760
The cloud proxy server sends the batched network messages to the computing device in a batch
780
The computing device receives network messages in a batch for the computer applications through the cloud network connection with the cloud proxy server

FIG. 7

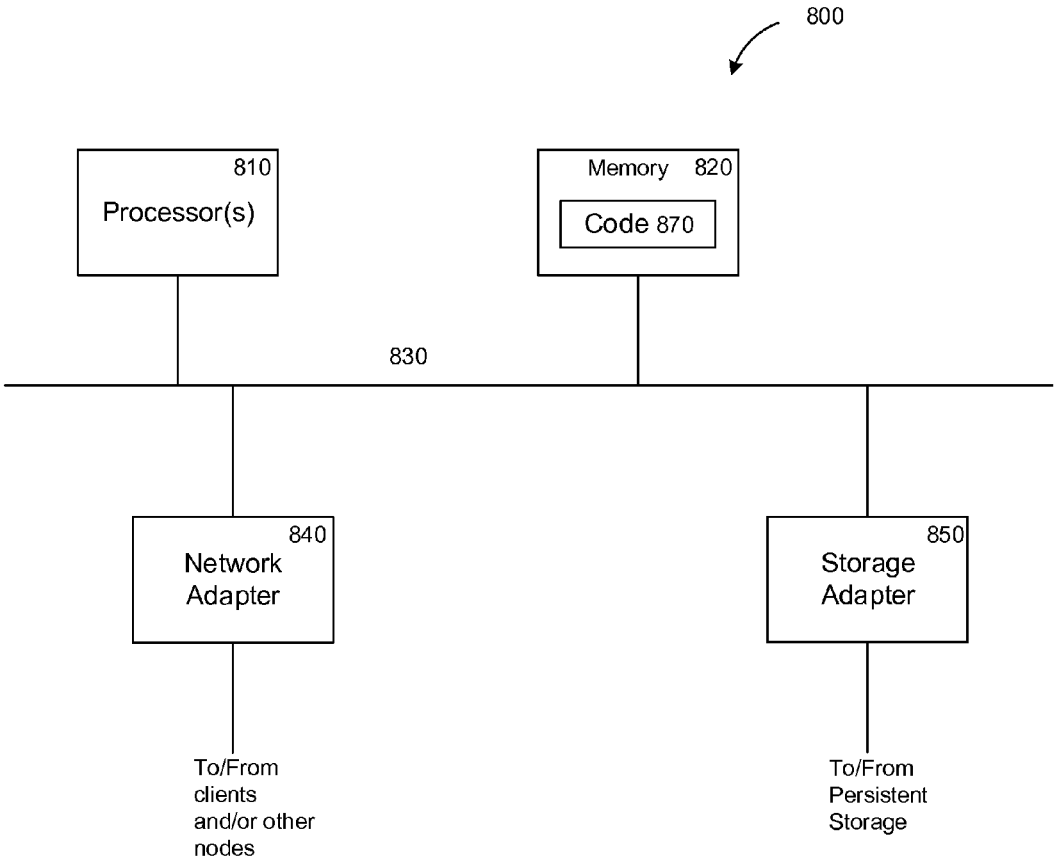
800
810
Processor(s)
Memory 820
Code 870
830
840
Network Adapter
850
Storage Adapter
To/From clients and/or other nodes
To/From Persistent Storage

FIG. 8

DEVICE CONNECTION PROXY THROUGH CLOUD TO OPTIMIZE NETWORK MESSAGES

PRIORITY CLAIM

This application claims to the benefit of U.S. Provisional Patent Application No. 61/708,794, entitled "CLOUD COMPUTING INTEGRATED OPERATING SYSTEM", which was filed on Oct. 2, 2012, which is incorporated by reference herein in its entirety.

FIELD OF THE INVENTION

At least one embodiment of the present invention pertains to mobile devices, and more particularly, to mobile devices using a cloud-based connection proxy server to optimize network messages.

BACKGROUND

There are many applications running on computing devices, e.g., mobile phones, tablet computers, laptop computers, etc., that can receive push notifications and messages from remote servers. Instead of a pull messaging transaction that is initiated by a receiving application, a remote server (e.g. an information publisher) initiates a push messaging transaction. Through a setting interface provided by an application or an operating system of a computing device, a user can adjust the preference and the subscriptions regarding the push and pull messaging transactions.

For instance, the Apple Push Notification Service is a push service. The Apple Push Notification Service forwards notifications from remote servers of applications to the Apple devices through a constantly open Internet Protocol (IP) connection. Such notifications can include badges, sounds or test alerts. Developers of applications can take advantage of the push service by using application programming interface (API) calls provided by Apple, Inc. The size of each notification message is usually restricted to a predetermined size, e.g. 256 bytes. Cloud-to-Device Messaging (C2DM) is a push service that allows remote servers to send messages to mobile applications on computing devices. Remote servers can use this service to notify mobile applications to contact the server and fetch updated data.

These message push services can create serious drains on the batteries of the computing devices, particularly for computing devices maintaining wireless network connections (e.g. WiFi or cellular networks). Every time a new message notification is pushed to a computing device, the computing device switches from a low power conservation state to a higher power consuming state for a period of time. Once entering the higher power consuming state, the computing device has to remain in the state for at least a fixed time period before the device can return to a low power conservation state. When push notifications reach the computing device at different points in time, the computing device needs to enter the higher power consuming state numerous times (and overall for a long period of time) to receive and process the push notifications, resulting in draining the battery of the computing device.

SUMMARY

Technology introduced here provides a mechanism to optimize network connections using cloud proxy connections. According to at least one embodiment, a computing device receives, requests for network connections with remote servers from multiple computer applications running on the computing device. The computing device further establishes a cloud network connection with a cloud proxy server. The cloud proxy server initiates and maintains proxy network connections with the remote servers. The cloud proxy server can delay at least one network message of the network messages received from the remote servers such that the cloud proxy server sends the network messages to the computing device continuously in a batch. The computing device receives the network messages in a batch to conserve battery consumption.

In accordance with the techniques introduced here, therefore, a computing device is provided. The computing device includes a networking component, a battery, a processor and a memory. The network component is capable of switching between states including a high power consumption state and a low power conservation state. The battery is configured to provide power to the networking component and other components of the device. The processor is configured to run computer applications and an operating system of the computing device. The memory stores instructions of the operating system which, when executed by the processor, cause the operating system to perform a process. The process receives, from the computer applications, requests for network connections with remote servers. The process establishes a cloud network connection with a cloud proxy server. The cloud proxy server is configured to maintain proxy network connections with the remote servers. The process receives, from the cloud proxy server, network messages in a batch for the computer applications though the cloud network connection. The network messages are generated by the remote servers. The cloud proxy server delays at least one network message of the network messages in order to aggregate the network messages in the batch.

In accordance with the techniques introduced here, therefore, a proxy server for optimizing network connections is provided. The proxy server includes a processor, a network component, a device connection module, a server connection module, and a message aggregation module. The networking component is configured for network communications with computing devices and remote servers. The device connection module includes instructions which, when executed by the processor, establish a device network connection with a computing device. The server connection module includes instructions which, when executed by the processor, establish a server network connection with a remote server in response to a request of connecting the remote server from the computing device. The message aggregation module includes instructions which, when executed by the processor, aggregates network messages for the computing device received from multiple remote servers in a batch before sending the batch to the computing device.

Other aspects of the technology introduced here will be apparent from the accompanying figures and from the detailed description which follows.

BRIEF DESCRIPTION OF THE DRAWINGS

These and other objects, features and characteristics of the present invention will become more apparent to those skilled in the art from a study of the following detailed description in conjunction with the appended claims and drawings, all of which form a part of this specification. In the drawings:

FIG. **1** illustrates an example system for computing devices connected to a cloud proxy service.

FIG. **2** illustrates an example of a computing device that can communicate with a cloud proxy server.

FIG. **3** illustrates an example operating system of a computing device for redirecting network communications.

FIG. **4** illustrates an example of a proxy server can batch network communications.

FIG. **5** illustrates an example of game systems connected to a cloud-based proxy server.

FIG. **6** illustrates an example of social media devices connected to a proxy server.

FIG. **7** illustrates an example of a process for optimizing network connections using cloud proxy connections.

FIG. **8** is a high-level block diagram showing an example of the architecture of a computer, which may represent any computing device or server described herein.

DETAILED DESCRIPTION

References in this specification to "an embodiment," "one embodiment," or the like, mean that the particular feature, structure, or characteristic being described is included in at least one embodiment of the present invention. Occurrences of such phrases in this specification do not all necessarily refer to the same embodiment, however.

FIG. **1** illustrates an example system for computing devices connected to a cloud proxy service. The system includes a cloud proxy service **110** configured to handle communications between the computing devices and remote servers. In one embodiment, the cloud proxy service **110** can be a server cluster having computer nodes interconnected with each other by a network. The server cluster can communicate with remote servers via the Internet. The cloud proxy service **110** contains storage nodes **112**. Each of the storage nodes **112** contains one or more processors **114** and storage devices **116**. The storage devices can include optical disk storage, RAM, ROM, EEPROM, flash memory, phase change memory, magnetic cassettes, magnetic tapes, magnetic disk storage or any other computer storage medium which can be used to store the desired information.

A cloud data interface **120** can also be included to receive data from and send data to computing devices. The cloud data interface **120** can include network communication hardware and network connection logic to receive the information from computing devices. The network can be a local area network (LAN), wide area network (WAN) or the Internet. The cloud data interface **120** may include a queuing mechanism to organize data update received from or sent to the computing devices **130** and **140**.

The computing devices **130** and **140** can each communicate with remote servers via the cloud proxy service **110**. When an application running on computing device **130** or **140** sends a message to a remote server, the device **130** or **140** sends the message to the cloud proxy service **110** instead. The cloud proxy service **110** maintains the network connection with the remote server and relays the message to the remote server. When the remote server sends a message to the application, the message reaches the cloud proxy service **110** via the established network connection. The cloud proxy service **110** determines the appropriate computing device to receive the message and relays the message to the computing device.

Although FIG. **1** illustrates two computing devices **130** and **140**, a person having ordinary skill in the art will readily understand that the technology disclosed herein can be applied to a single computing device or more than two computing devices connected to the cloud proxy service **110**.

A computing device **130** includes an operating system **132** to manage the hardware resources of the computing device **130** and provides services for running computer applications **134** (e.g., mobile applications running on mobile devices). The computer applications **134** stored in the computing device **130** require the operating system **132** to properly run on the device **130**. The computing device **130** includes at least one local storage device **138** to store the computer applications and user data. The computing device **130** or **140** can be a desktop computer, a laptop computer, a tablet computer, an automobile computer, a game console, a smart phone, a personal digital assistant, or other computing devices capable of running computer applications, as contemplated by a person having ordinary skill in the art.

The computer applications **134** stored in the computing device **130** can include applications for general productivity and information retrieval, including email, calendar, contacts, and stock market and weather information. The computer applications **134** can also include applications in other categories, such as mobile games, factory automation, GPS and location-based services, banking, order-tracking, ticket purchases or any other categories as contemplated by a person having ordinary skill in the art.

The operating system **132** of the computing device **130** includes a socket redirection module **136** to redirect network messages. The computer applications **134** generate and maintain network connections directed to various remote servers, e.g. remote servers **182** and **184**. Instead of directly opening and maintaining the network connections with these remote servers, the socket redirection module **136** routes all of the network messages for these connections of the computer applications **134** to the cloud proxy service **110**. The cloud proxy service is responsible for opening and maintaining network connections with the remote servers **182** and **184**.

All or some of the network connections of the computing device **130** are proxied through the cloud proxy service **110**. The network connections can include Transmission Control Protocol (TCP) connections, User Datagram Protocol (UDP) connections, or other types of network connections based on other protocols. When there are multiple computer applications **134** that need network connections to multiple remote servers, the computing device **130** only needs to maintain one network connections with the cloud proxy service **110**. The cloud proxy service **110** will in turn maintain multiple connections with the remote servers on behalf of the computer applications **134**.

The cloud proxy service can connect to the remote servers **182** and **184** via a network **170**. The network **170** can be, for example, the Internet, a metropolitan area network (MAN), a wide area network (WAN), a LAN, or any other type of network or combination of networks.

The cloud proxy server **110** receives networking messages (e.g. push or pull notifications) from the remote servers. Instead of sending the messages to the applications running on the computing device, the cloud proxy server **110** can batch the incoming networking messages and optimize the wireless power consumption of the computing device by delaying networking messages and sending them to the computing devices in batches. This can lead to more efficient power usage of the computing device.

The computer applications **134** running on the same computing device **130** need not communicate with each other to coordinate their network connections with remote servers. The cloud proxy **110** efficiently maintains the network connections with remote servers for the applications **134** and controls the timing of sending messages back to the applications **134**.

FIG. **2** illustrates an example of a computing device that can communicate with a cloud proxy server, according to one

embodiment. The computing device **200** can include a networking component **210**, a battery **220**, a processor **230** and a memory **240**. The memory **240** can store instructions of an operating system **250** of the computing device **200**. The memory **240** can further store instructions of one or more computer applications **260** designed to run on the computing device **200**.

The networking component **210** can be capable of switching between states including a high power consumption state and a low power conservation state. The network component **210** can be, e.g. a WiFi networking adapter, a cellular phone networking adapter, or a combination thereof. The battery **220** is configured to provide power to the networking component and other components of the computing device **200**. The computing device may further include a power adapter to be connected to a power source to provide power for the computing device **200**, in addition to the power provided the battery **220**.

The processor **230** is configured to run computer applications **260** and the operating system **250** of the computing device **200**. The memory **240** stores instructions of the operating system **250** which, when executed by the processor **230**, cause the operating system **250** to perform processes for realizing certain functionalities of the computing device **200**.

For instance, the process of the operating system **250** can receive, from the computer applications **260**, requests for network connections with remote servers (e.g., remote servers **182** and **184** in FIG. **1**). The process of the operating system **250** can further establish a cloud network connection (via, e.g., the network component **210**) with a cloud proxy server (e.g., cloud proxy service **110** in FIG. **1**). The computer applications **260** do not need to be aware of the cloud proxy server. The computer applications **260** can perform and communicate with the remote servers as if the computer application were directly connected to the remote servers. The operating system **250** running behind the computer applications **260** is responsible to relay network messages to and from the cloud proxy server.

The cloud proxy server can be configured to maintain proxy network connections with the remote servers. The process of the operating system **250** can further receive, from the cloud proxy server (via, e.g., the network component **210**), network messages in a batch for the computer applications **260** though the cloud network connection. The network messages are generated by the remote servers and can include, e.g., push notifications. The cloud proxy server delays at least one network message of the network messages in order to aggregate the network messages in the batch.

In various embodiments, the network messages can include other types of data. For instance, the computer applications can include one or more instances of network browsers. The network browsers generate requests (e.g. HTTP GET) for Internet data from remote Hypertext Transfer Protocol (HTTP) servers. Instead of establishing TCP connections directly with the remote HTTP servers, the computing device lets the cloud proxy server work as a proxy and establish TCP connections with the HTTP servers. The computing device receives network messages including the HTTP data from the cloud proxy server. The HTTP GET requests from different instances of browsers will be satisfied by batched HTTP data replayed and aggregated by the cloud proxy server. In this way, the battery power and the network connections of computing device are optimized and utilized in a more efficient way.

The network component **210** switches to the high power consumption state when the computing device **200** receives the network messages from the cloud proxy server. The network messages can be aggregated in the batch such that the network component **210** of the computing device **200** remains at the high power consumption state to receive the network messages for as little time as possible. In this way, the computing device **200** can consume as little power as possible for receiving the network messages. As a result, the battery life of the computing device **200** is extended.

FIG. **3** illustrates an example operating system of a computing device for redirecting network communications, according to one embodiment. The operating system **300** includes a kernel **304**. The kernel **304** provides interfaces to hardware of the electronic device for the computer applications running on top of the kernel **304**, and supervises and controls the computer applications. The kernel **304** isolates the computer applications from the hardware. The kernel **304** may include one or more intervening sources that can affect execution of a computer application. In one embodiment, the kernel **304** includes a network I/O module **306**, a file I/O module **308**, multi-threading module **310**, user input **314**, system interrupts **316**, and shared memory access **318**.

A socket redirection module **330** runs on top of the kernel **304**. The socket redirection module **330** is responsible for directing the network communications (also referred to as socket communications) of the computer applications to the cloud proxy server. The socket redirection module **330** is configured to redirect the requests from the computer applications for network connections with the remote server to the cloud proxy server. So instead of connecting directly with the remote servers as requested by the computer applications, the computing device connects with the cloud proxy server using the socket redirection module **330**. The socket redirection module **330** is responsible for network communications with the cloud proxy server; while the computer applications running on the computing device are not necessarily aware of the existence of the cloud proxy server.

In some embodiments, the operating system **300** can further include a message modification module **340** configured to modify the network messages received from the cloud proxy server before the network messages are fed to the computer applications. The message modification module **340** modifies the received network messages to network messages as if they were directly sent from the remote servers. For instance, the message modification module **340** may change source socket addresses of the received network messages from a socket address of the cloud proxy server to socket addresses of the remote servers. Then the modified network messages are fed to the corresponding computer applications (e.g., depending on port numbers). Since the computer applications receive the modified network messages with target socket addresses pointing to the remote servers, the computer applications can process and treat these modified network messages as if they are directly sent from the remote servers, without any intermediate proxies.

In some alternative embodiments, the operating system **300** may provide a socket handle controlled by the socket redirection module **330**. The socket handle may be a modified version of a normal handle. When applications running on top of the operating system **300** call the socket handle, the socket redirection module **330** is controlling the socket handle to redirect network connection transactions to the cloud proxy server. The computer application or the developer of the computer application does not need to be aware of the socket redirection module **330**. When the computer application calls the socket handle to open a connection with the remote servers, the socket redirection module **330** of the operating system **300** takes over and instead redirects the network connection to the cloud proxy server.

The developers of the computer applications do not need to design the computer application with two network modes (e.g. WiFi mode and cellular data mode) in mind. The computing device is connected to the cloud proxy server. The cloud proxy server is handling the network communication between the computing device and the outside remote servers. The computer applications can be designed to perform as if the computing device is connected to a WiFi network all the time. The operating system of the computing device and the cloud proxy server is handling and optimizing the network communications without the intervention of the computer applications.

FIG. **4** illustrates an example of a proxy server that can batch network communications, according to one embodiment. The proxy server **400** can be, e.g., a dedicated standalone server, or implemented in a cloud computing service. The proxy server includes a network component **410**, a processor **420**, and a memory component **430**. The memory **430** can include instructions for a device connection module **440**, a server connection module **450**, and a message aggregation module **460**. The networking component is **410** configured for network communications with computing devices and remote servers, as shown in, e.g., FIG. **1**. In some embodiments, the proxy server can include multiple network components for network communications with different computing devices and remote servers.

The device connection module **440** includes instructions which, when executed by the processor **420**, establishes a device network connection with a computing device. The server connection module **450** includes instructions which, when executed by the processor **420**, establishes a server network connection with a remote server in response to a request to connect the remote server from the computing device. The request can be generated by a computer application running at the computing device. The server connection module **450** can maintain multiple server network connections with multiple remote servers as a proxy of one or more computer applications of the computing devices.

The message aggregation module **460** includes instructions which, when executed by the processor **420**, aggregates network messages for the computing device received from multiple remote servers in a batch before sending the batch to the computing device. During the aggregating process, the message aggregation module **460** can identify network messages for one computing device among received network messages for different computing devices connected to the proxy server **400**. The message aggregation module **460** can further delay at least one of the network messages for the computing device such that the network messages for the computing device can be sent in a batch.

The message aggregation module **460** can aggregate network message received in a time period into a single batch. The time length of the time period can be determined by factors including a battery life of the computing device, a current battery level of the computing device, a usage pattern of the computing device, a workload of the computing device, or a frequency of receiving network messages for the computing device. For instance, the time length for batching can be increased when the current battery level of the computing device is low or the current workload of the computing device is high. The time length for batching can be decreased if the frequency of receiving network messages for the computing device is higher than certain value. If the computing device is not used frequently according to the usage pattern, the time length for batching may be increased.

The message aggregation module **460** can also aggregate network messages generated by the computer applications for the remote servers. The message aggregation module **460** can receive the message from the computing device and delay some of the messages so that the messages can be sent out to the remote servers in one or more batches.

The technology disclosed herein can be applied to various computing devices including, e.g., game systems or devices capable of running game applications. For instance, FIG. **5** illustrates an example of game systems connected to a cloud-based proxy server. As depicted in FIG. **5**, a proxy server **500** may provide a cloud-based game messaging service to multiple game systems **511**, **512** and **513** over a network **520**. The network **520** can be, e.g., the Internet. Examples of game devices **511**, **512** and **513** may include, but are not limited to, a mobile phone, a smartphone, a personal digital assistant (PDA), a tablet, a mobile game console, a laptop computer, a desktop computer, or any other devices having communication capability.

In some embodiments, proxy server **500** relays all network communications of game systems to remote game servers, e.g., servers **582** and **584**. The proxy server **500** serves as a proxy for all messages from and to the game systems **511**, **512** and **513**.

For instance, when an application running on a game system **512** requests to establish a network connection with remote game server **582**, the operating system of the game system **512** forwards the request to the proxy server **500**, instead of the remote game server **582**. The proxy server then establishes a network connection with the remote game server **582**. The remote game server **582** may send some game messages or game data for the game system **512** to the proxy server **500**. The proxy server **500** in turn relays the game messages or data to the game system **512** in batches.

In some embodiments, proxy server **500** may determine the time interval for sending the messages in batches to the game systems. The determination can be made based on, e.g., the work load of the game systems, the battery levels of the game systems or the game event about to happen in the game systems. For instance, the proxy server **500** may identify that in game system **512**, a predetermined game event of entering a new stage is about to happen. Examples of the predetermined game event may include, but are not limited to, starting a game by a player of the game, entering a new stage in the game by the player, entering a new place in the game by the player, completing a mission in the game by the player, obtaining a game item by the player, meeting another character in the game by the player, talking with another character in the game by the player, occurrence of a scene change in the game, any other pre-defined game-related events or milestones, or even suspension of the game at a point intended to avoid disrupting the high quality experience for the user. The proxy server **500** can send the messages from the remote game server **582** in a batch to the proxy system **512** when it determines that the game event is going to happen soon.

Although FIG. **5** illustrates all devices as game systems, a person having ordinary skill in the art can readily understand that other types of devices can be included. For example, game systems **511**, **512** and **513** can be replaced with, e.g., tablets, smart phones or laptop computers.

Similarly, the technology disclosed herein can also be applied to devices for social network messaging. For instance, FIG. **6** illustrates an example of social media devices connected to a proxy server. As depicted in FIG. **6**, a proxy server **600** may provide a proxy service to multiple computing devices **611**, **612** and **613** over a network **620**. Examples of devices **611**, **612** and **613** may include, but are not limited to, a mobile phone, a smartphone, a personal digital assistant (PDA), a tablet, a mobile game console, a

laptop computer, a desktop computer, or any other devices having communication capability.

In some embodiments, proxy server **600** relays all social media communications of devices to remote servers, e.g., servers **682** and **684**. The proxy server **600** serves as a proxy for all social media messages from and to the devices **611**, **612** and **613**.

For instance, when a social media application running on a device **612** requests to establish a network connection with remote social media server **682**, the operating system of the system **612** forwards the request to the proxy server **600**, instead of the remote game server **682**. The proxy server then establishes a network connection with the remote social media server **682**. The remote social media server **682** may send some social messages for the device **612** to the proxy server **600**. The proxy server **600** in turn relays the social messages to the device **612** in batches.

In some embodiments, proxy server **600** may determine the time interval for sending the messages in batches to the devices **611-613**. The determination can be made based on, e.g., the work load of the devices, the battery levels of the game systems.

FIG. **7** illustrates an example of a process **700** for optimizing network connections using cloud proxy connections. The process **700** starts at step **710**, where a computing device receives requests for network connections with remote servers from multiple computer applications running on the computing device. The requests for networking connections can, e.g., include requests for establishing network socket connections between the computing device and the remote servers.

At step **720**, the computing device establishes a cloud network connection with a cloud proxy server. The cloud network connection is used to receive messages for the multiple computer applications from the remote servers relayed by the cloud proxy server. The cloud proxy server is separate from the remote servers. The cloud proxy server can serve as a proxy between the computer applications running on the computing device and remote servers. At step **730**, the cloud proxy server initiates and maintains proxy network connections with the remote servers. In various embodiments, the cloud network connection can be, e.g., a Transmission Control Protocol (TCP) socket connection between the computing device and the cloud proxy server. The proxy network connections can be, e.g., Transmission Control Protocol (TCP) socket connections between the cloud proxy server and the remote servers.

At step **740**, the cloud proxy server receives network messages that are generated by the remote servers. These network messages are for the computer applications at the computing device.

At step **750**, the cloud proxy server delays at least one network message of the network messages such that the cloud proxy server can send the network messages to the computing device in a batch. At step **760**, the cloud proxy server sends the batched network messages to the computing device in a batch. The cloud proxy server batches the network messages to reduce power consumption of the computing device.

At step **770**, the computing device receives network messages in a batch for the computer applications through the cloud network connection with the cloud proxy server. By receiving the network messages in a batch, the computing device can stay at a high power consumption state for a time period shorter than an overall time period for which the computing device would stay at the high power consumption if the network messages were sent individually without batching. Since the operating system of the computing device is responsible for communicating with the cloud proxy server and relays the messages to the computer applications, the computer applications receive the network messages from the cloud proxy server as if the network messages are received directly from the remote servers.

Those skilled in the art will appreciate that the logic illustrated in FIG. **7** and described above, and in each of the flow diagrams discussed below if any, may be altered in a variety of ways. For example, the order of the logic may be rearranged, substeps may be performed in parallel, illustrated logic may be omitted, other logic may be included, etc.

FIG. **8** is a high-level block diagram showing an example of the architecture of a computer **800**, which may represent any computing device or server described herein. The computer **800** includes one or more processors **810** and memory **820** coupled to an interconnect **830**. The interconnect **830** shown in FIG. **8** is an abstraction that represents any one or more separate physical buses, point to point connections, or both connected by appropriate bridges, adapters, or controllers. The interconnect **830**, therefore, may include, for example, a system bus, a Peripheral Component Interconnect (PCI) bus or PCI-Express bus, a HyperTransport or industry standard architecture (ISA) bus, a small computer system interface (SCSI) bus, a universal serial bus (USB), IIC (I2C) bus, or an Institute of Electrical and Electronics Engineers (IEEE) standard 1394 bus, also called "Firewire".

The processor(s) **810** is/are the central processing unit (CPU) of the computer **800** and, thus, control the overall operation of the computer **800**. In certain embodiments, the processor(s) **810** accomplish this by executing software or firmware stored in memory **820**. The processor(s) **810** may be, or may include, one or more programmable general-purpose or special-purpose microprocessors, digital signal processors (DSPs), programmable controllers, application specific integrated circuits (ASICs), programmable logic devices (PLDs), trusted platform modules (TPMs), or the like, or a combination of such devices.

The memory **820** is or includes the main memory of the computer **800**. The memory **820** represents any form of random access memory (RAM), read-only memory (ROM), flash memory, or the like, or a combination of such devices. In use, the memory **820** may contain a code **870** containing instructions according to the technology disclosed herein.

Also connected to the processor(s) **810** through the interconnect **830** are a network adapter **840** and a storage adapter **850**. The network adapter **840** provides the computer **800** with the ability to communicate with remote devices, over a network and may be, for example, an Ethernet adapter or Fibre Channel adapter. The network adapter **840** may also provide the computer **800** with the ability to communicate with other computers. The storage adapter **850** allows the computer **800** to access a persistent storage, and may be, for example, a Fibre Channel adapter or SCSI adapter.

The code **870** stored in memory **820** may be implemented as software and/or firmware to program the processor(s) **810** to carry out actions described above. In certain embodiments, such software or firmware may be initially provided to the computer **800** by downloading it from a remote system through the computer **800** (e.g., via network adapter **840**).

The techniques introduced herein can be implemented by, for example, programmable circuitry (e.g., one or more microprocessors) programmed with software and/or firmware, or entirely in special-purpose hardwired circuitry, or in a combination of such forms. Special-purpose hardwired circuitry may be in the form of, for example, one or more application-specific integrated circuits (ASICs), programmable logic devices (PLDs), field-programmable gate arrays (FPGAs), etc.

Software or firmware for use in implementing the techniques introduced here may be stored on a machine-readable storage medium and may be executed by one or more general-purpose or special-purpose programmable microprocessors. A "machine-readable storage medium", as the term is used herein, includes any mechanism that can store information in a form accessible by a machine (a machine may be, for example, a computer, network device, cellular phone, personal digital assistant (PDA), manufacturing tool, any device with one or more processors, etc.). For example, a machine-accessible storage medium includes recordable/non-recordable media (e.g., read-only memory (ROM); random access memory (RAM); magnetic disk storage media; optical storage media; flash memory devices; etc.), etc.

The term "logic", as used herein, can include, for example, programmable circuitry programmed with specific software and/or firmware, special-purpose hardwired circuitry, or a combination thereof.

In addition to the above mentioned examples, various other modifications and alterations of the invention may be made without departing from the invention. Accordingly, the above disclosure is not to be considered as limiting and the appended claims are to be interpreted as encompassing the true spirit and the entire scope of the invention.

What is claimed is:

1. A method for optimizing network connections using proxy connections, comprising:

receiving, at a computing device, requests for network connections with remote servers from multiple computer applications running on the computing device, wherein a gaming application is one of the multiple computer applications, wherein the gaming application utilizes gaming content available through one or more remote servers, the gaming content enabling a user of the computing device to play a game associated with the gaming application on the computing device;

establishing, by the computing device, a network connection with a proxy server separate from the remote servers, wherein the proxy server is configured to maintain proxy network connections with the remote servers; and

receiving, at the computing device, network messages in a batch for the computer applications through the network connection with the proxy server, wherein the network messages are generated by the remote servers, wherein the gaming content for enabling the user of the computing device to play the game is received as one or more network messages;

wherein the proxy server batches the network messages such that the computing device stays at a high power consumption state for a time period shorter than an overall time period for which the computing device would stay at the high power consumption if the network messages were sent individually without batching;

wherein the network messages are aggregated in the batch by delaying at least one network message of the network messages,

wherein the proxy server aggregates network messages received in a time period into a single batch, a time length of the time period being determined based on one or more game events of the game, wherein a given game event includes a starting of a given game by the user, a entering of a new stage in the given game by the user, a entering of a new place in the given game by the user, a completing of a mission in the given game by the user, an obtaining of a game item in the given game by the user, a meeting of another character in the given game by the user, a talking with another character in the given game by the user, an occurrence of a scene change in the given game, any predefined game-related events, any predefined game-related milestones, or a suspension of the given game at a point of play intended to avoid disrupting an experience for the user.

2. The method of claim **1**, wherein the requests for networking connections include requests for establishing network socket connections between the computing device and the remote servers.

3. The method of claim **1**, wherein the network connection with the proxy server is configured to receive messages for the multiple computer applications from the remote servers.

4. The method of claim **1**, wherein the proxy server serves as a proxy between the computer applications running on the computing device and remote servers.

5. The method of claim **1**, wherein the network connection with the proxy server is a Transmission Control Protocol (TCP) socket connection between the computing device and the proxy server, and the proxy network connections are Transmission Control Protocol (TCP) socket connections between the proxy server and the remote servers.

6. The method of claim **1**, wherein the computer applications receive the network messages from the proxy server as if the network messages are received directly from the remote servers.

7. The method of claim **1**, wherein the proxy server is a cloud-based proxy server.

8. A computing device comprising:

a networking component capable of switching between states including a high power consumption state and a low power conservation state;

a battery configured to provide power to the networking component;

a processor configured to run computer applications and an operating system of the computing device; and

a memory component storing instructions of the operating system which, when executed by the processor, cause the operating system to perform a process including:

receiving, from the computer applications, requests for network connections with remote servers, wherein a gaming application is one of the computer applications, wherein the gaming application utilizes gaming content available through one or more remote servers, the gaming content enabling a user of the computing device to play a game associated with the gaming application on the computing device;

establishing a network connection with a proxy server, wherein the proxy server is configured to maintain proxy network connections with the remote servers; and

receiving, from the proxy server, network messages in a batch for the computer applications though the network connection with the proxy server, wherein the network messages are generated by the remote servers, wherein the gaming content for enabling the user of the computing device to play the game is received as one or more network messages;

wherein the proxy server batches the network messages such that the networking component stays at the high power consumption state for a time period shorter than an overall time period for which the networking component would stay at the high power consumption if the network messages were sent individually without batching,

wherein the network messages are aggregated in the batch by delaying at least one network message of the network messages,

wherein the proxy server aggregates network messages received in a time period into a single batch, a time length of the time period being determined based on one or more game events of a game, wherein a given game event includes a starting of a given game by the user, a entering of a new stage in the given game by the user, a entering of a new place in the given game by the user, a completing of a mission in the given game by the user, an obtaining of a game item in the given game by the user, a meeting of another character in the given game by the user, a talking with another character in the given game by the user, an occurrence of a scene change in the given game, any predefined game-related events, any predefined game-related milestones, or a suspension of the given game at a point of play intended to avoid disrupting an experience for the user.

9. The computing device of claim **8**, wherein the process further includes:

switching the network component to the high power consumption state when the computing device receives the network messages from the proxy server.

10. The computing device of claim **8**, wherein the network messages are aggregated in the batch such that the computing device consumes as little power as possible to receive the network messages.

11. The computing device of claim **8**, wherein the operating system of the computing device includes a socket redirection module configured to redirect the requests from the computer applications for network connections with the remote server to the proxy server.

12. The computing device of claim **11**, wherein the socket redirection module is responsible for network communications with the proxy server, and the computer applications running on the computing device are not aware of the existence of the proxy server.

13. The computing device of claim **8**, wherein the computer applications are performing and receiving network messages as if the computing device were maintaining network connections directly with the remote servers.

14. The computer device of claim **8**, wherein the network messages include push notifications generated by the remote servers.

15. The computing device of claim **8**, wherein the operating system of the computing device includes a message modification module configured to modify the network messages received from the proxy server before the network messages are fed to the computer applications, to network messages as if they were directly sent from the remote servers.

16. The computing device of claim **15**, wherein the message modification module changes source socket addresses of the network messages from a socket address of the proxy server to socket addresses of the remote servers.

17. A non-transitory computer readable storage medium storing computer executable instructions for optimizing network connections, comprising:

instructions for receiving requests for network connections with remote servers from multiple computer applications running on the computing device, wherein a gaming application is one of the multiple computer applications, wherein the gaming application utilizes gaming content available through one or more remote servers, the gaming content enabling a user of the computing device to play a game associated with the gaming application on the computing device;

instructions for establishing a network connection with a proxy server separate from the remote servers, wherein the proxy server is configured to maintain proxy network connections with the remote servers; and

instructions for receiving the network messages in a batch for the computer applications through the network connection with the proxy server, wherein the network messages are generated by the remote servers, wherein the gaming content for enabling the user of the computing device to play the game is received as one or more network messages;

wherein the proxy server batches the network messages such that the computing device stays at a high power consumption state for a time period shorter than an overall time period for which the computing device would stay at the high power consumption if the network messages were sent individually without batching,

wherein the network messages are aggregated in the batch by delaying at least one network message of the network messages,

wherein the proxy server aggregates network messages received in a time period into a single batch, a time length of the time period being determined based on one or more game events of a game, wherein the game is one of the multiple computer applications, wherein a given game event includes a starting of a given game by the user, a entering of a new stage in the given game by the user, a entering of a new place in the given game by the user, a completing of a mission in the given game by the user, an obtaining of a game item in the given game by the user, a meeting of another character in the given game by the user, a talking with another character in the given game by the user, an occurrence of a scene change in the given game, any predefined game-related events, any predefined game-related milestones, or a suspension of the given game at a point of play intended to avoid disrupting an experience for the user.

18. The non-transitory computer readable storage medium of claim **17**, wherein the requests for networking connections include requests for establishing network socket connections between the computing device and the remote servers.

19. The non-transitory computer readable storage medium of claim **17**, wherein the network connection with the proxy server is configured to receive messages for the multiple computer applications from the remote servers.

20. The non-transitory computer readable storage medium of claim **17**, wherein the proxy server serves as a proxy between the computer applications running on the computing device and remote servers.

21. The non-transitory computer readable storage medium of claim **17**, wherein the network connection with the proxy server is a Transmission Control Protocol (TCP) socket connection between the computing device and the proxy server, and the proxy network connections are Transmission Control Protocol (TCP) socket connections between the proxy server and the remote servers.

22. The non-transitory computer readable storage medium of claim **17**, wherein the computer applications receive the network messages from the proxy server as if the network messages are received directly from the remote servers.

* * * * *