US009398918B2

(12) **United States Patent**
Torrie

(10) **Patent No.: US 9,398,918 B2**
(45) **Date of Patent: Jul. 26, 2016**

(54) **STABILIZING MICROFRACTURE DEVICE**

(75) Inventor: **Paul Alexander Torrie**, Marblehead, MA (US)

(73) Assignee: **Smith & Nephew, Inc.**, Memphis, TN (US)

(*) Notice: Subject to any disclaimer, the term of this patent is extended or adjusted under 35 U.S.C. 154(b) by 344 days.

(21) Appl. No.: **13/982,434**

(22) PCT Filed: **Jan. 27, 2012**

(86) PCT No.: **PCT/US2012/022941**

§ 371 (c)(1),
(2), (4) Date: **Oct. 15, 2013**

(87) PCT Pub. No.: **WO2012/103459**

PCT Pub. Date: **Aug. 2, 2012**

(65) **Prior Publication Data**

US 2014/0031825 A1 Jan. 30, 2014

Related U.S. Application Data

(60) Provisional application No. 61/436,653, filed on Jan. 27, 2011.

(51) **Int. Cl.**
A61B 17/16 (2006.01)
A61B 17/34 (2006.01)

(52) **U.S. Cl.**
CPC ***A61B 17/1604*** (2013.01); ***A61B 17/1664*** (2013.01); ***A61B 17/1666*** (2013.01); ***A61B 17/1668*** (2013.01); ***A61B 17/3472*** (2013.01)

(58) **Field of Classification Search**
CPC A61B 17/1604; A61B 17/1664; A61B 17/1666; A61B 17/1668; A61B 17/3472
See application file for complete search history.

(56) **References Cited**

U.S. PATENT DOCUMENTS

2004/0147932 A1* 7/2004 Burkinshaw A61B 17/1675 606/79
2007/0270870 A1* 11/2007 Torrie ..... A61B 17/1604 606/86 R
2010/0191195 A1* 7/2010 Kirschenbaum ... A61B 17/1604 604/272
2010/0249786 A1* 9/2010 Schmieding A61B 17/1633 606/80
2012/0071876 A1* 3/2012 Stoll A61B 17/1604 606/79

FOREIGN PATENT DOCUMENTS

WO 2008/045902 A2 4/2008

OTHER PUBLICATIONS

Patent Examination Report No. 1 for related Australian Application No. 2012211188 issued Jul. 14, 2015.
Office Action from related European Application No. 12702159.0-1654 issued May 27, 2016.

* cited by examiner

Primary Examiner — Larry E Waggle, Jr.
(74) *Attorney, Agent, or Firm* — Burns & Levinson, LLP; Joseph M. Maraia

(57) **ABSTRACT**

A microfracture device comprising a guide shaft having a proximal end and a distal end and defining an internal passage between the proximal and distal ends, the distal end having a curved tip, a stabilizing portion disposed along an outer surface of the guide shaft, at least a portion of the stabilizing portion being wider than the guide shaft, and a flexible element movably positioned within the internal passage of the guide shaft, the flexible element having a distal tip configured for driving into bone.

29 Claims, 13 Drawing Sheets

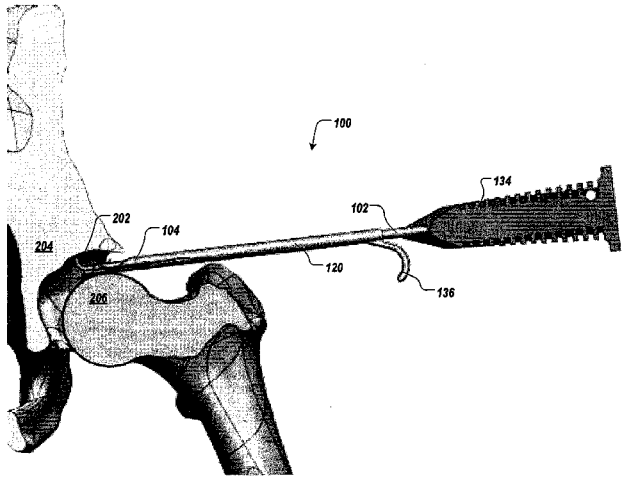

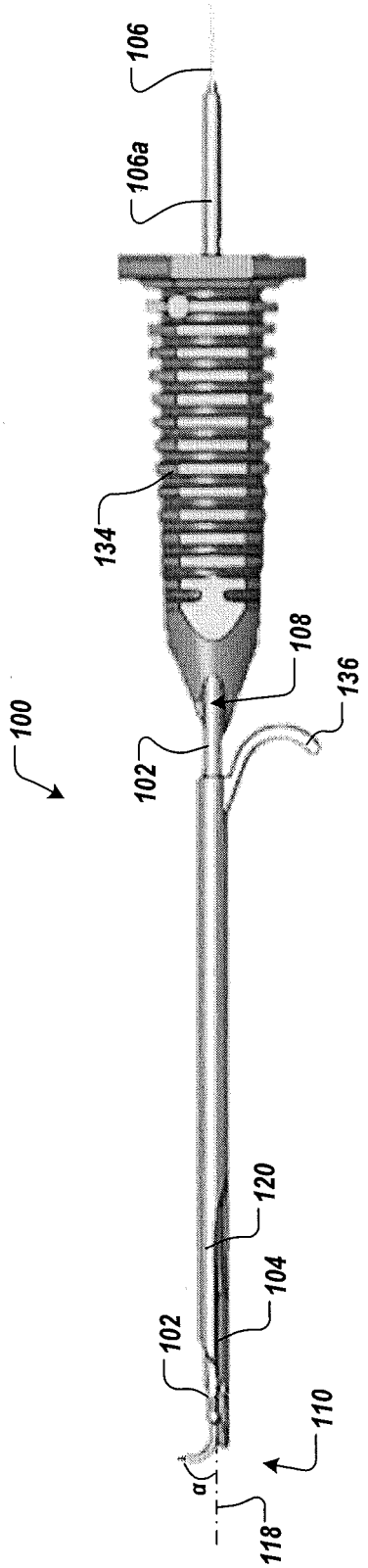

FIG. 1A

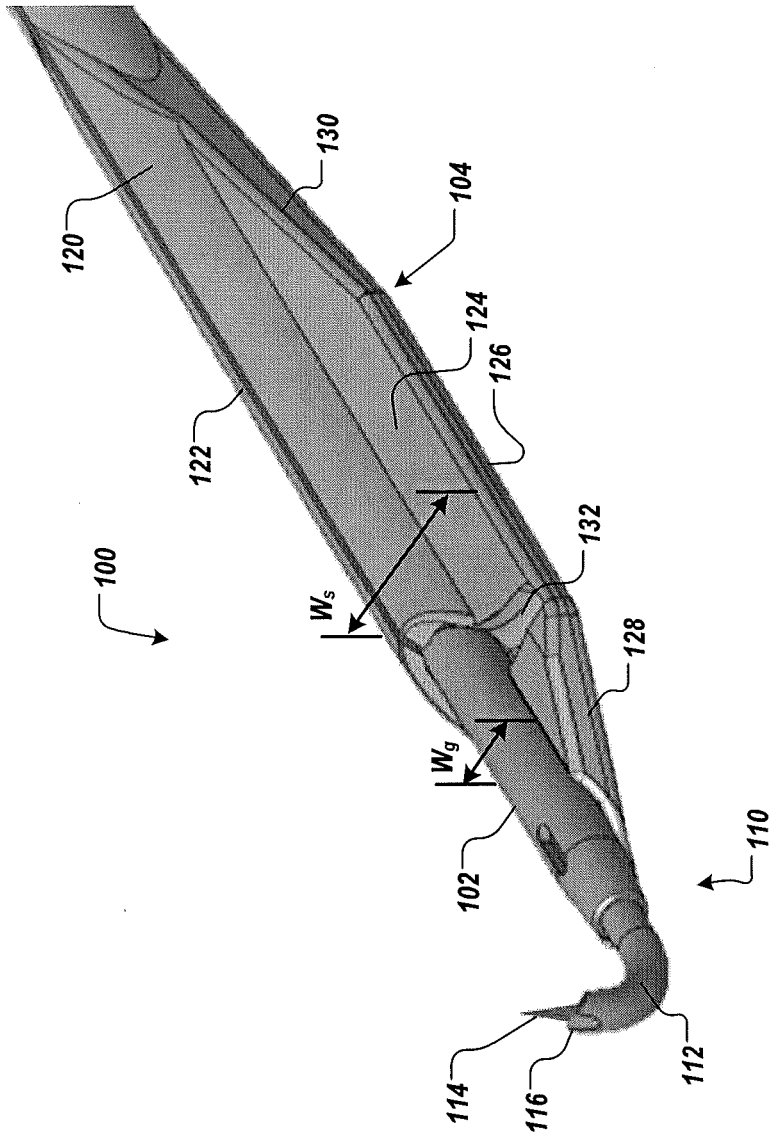

FIG. 1B

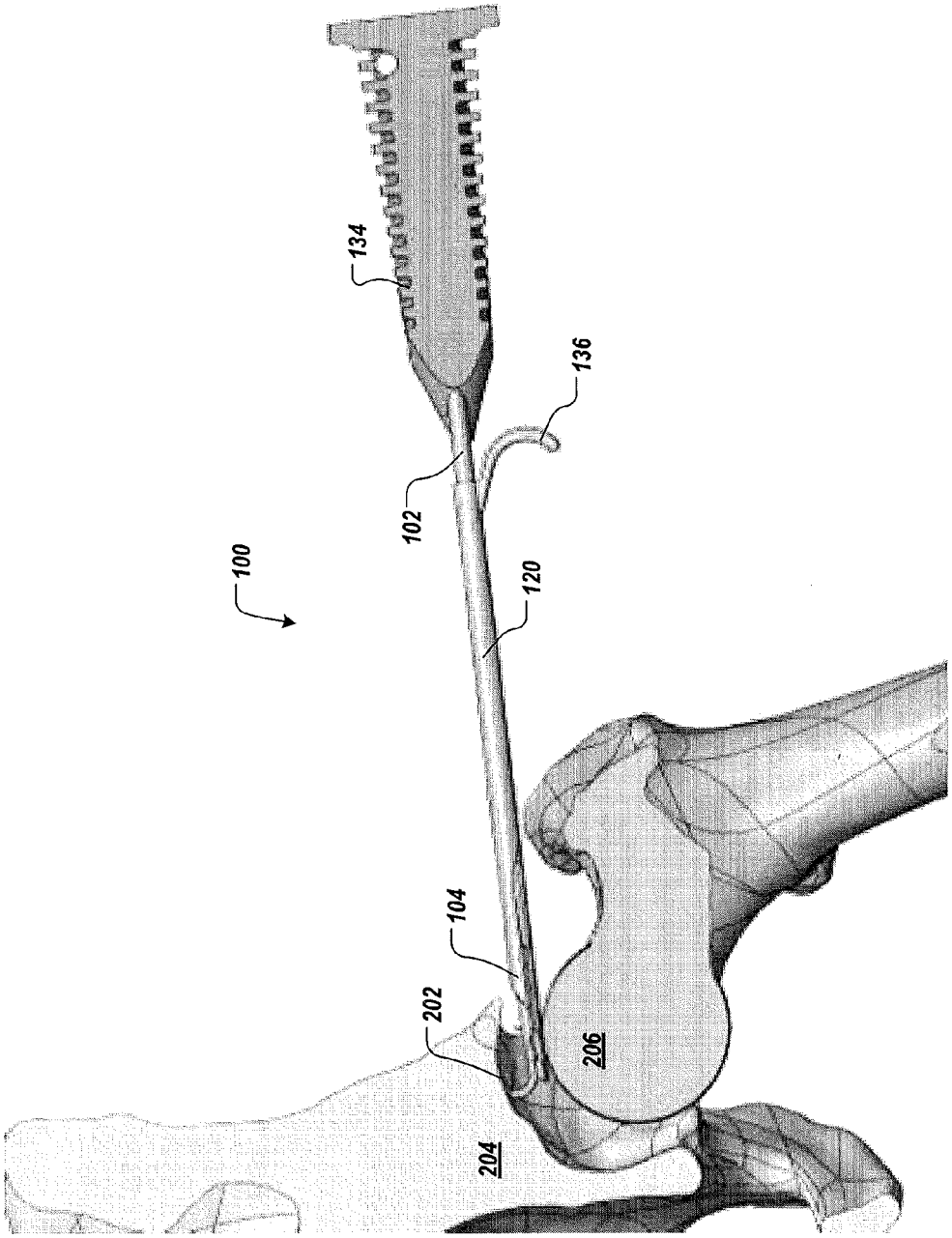

FIG. 2A

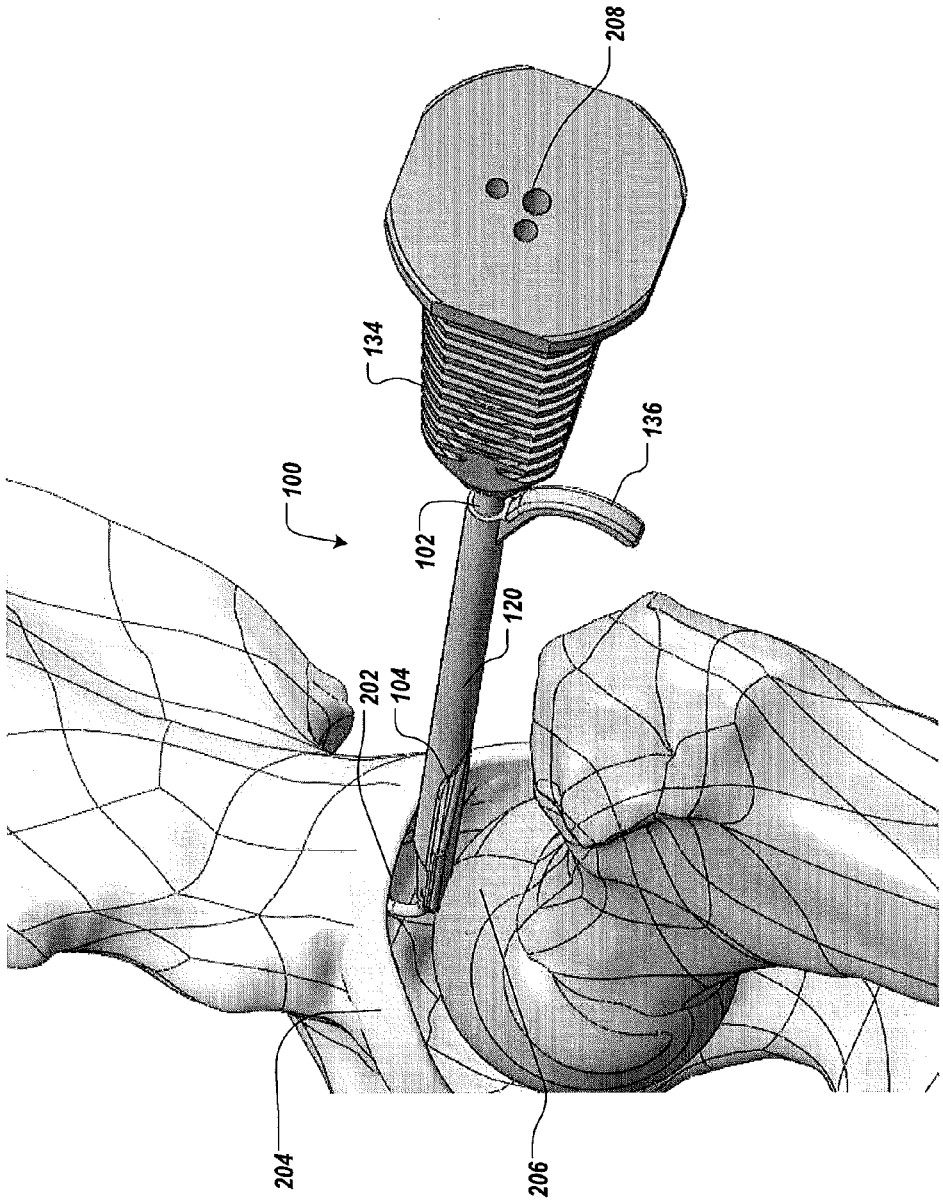

FIG. 2B

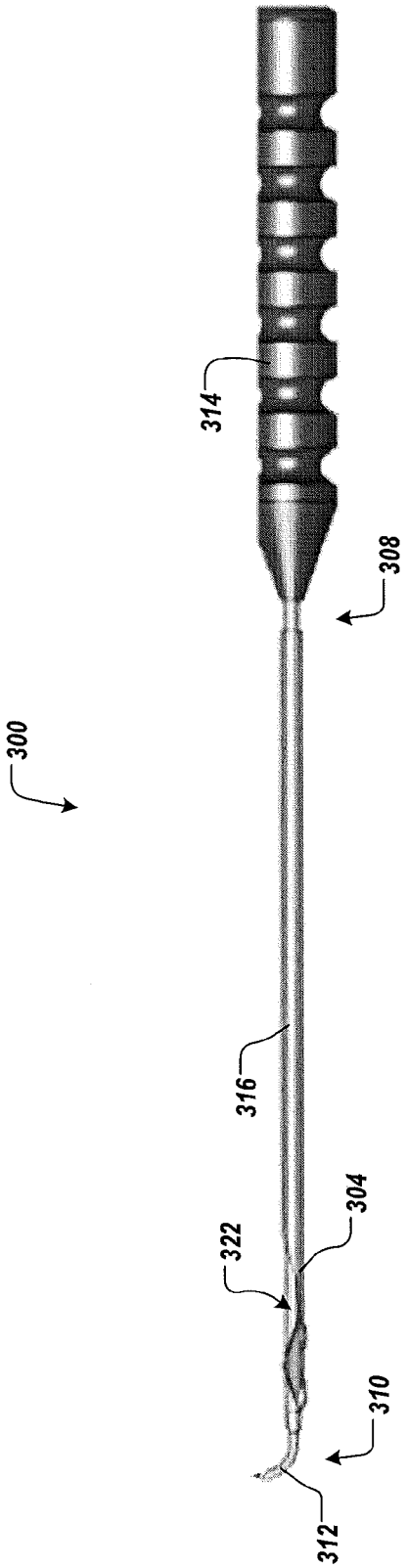

FIG. 3A

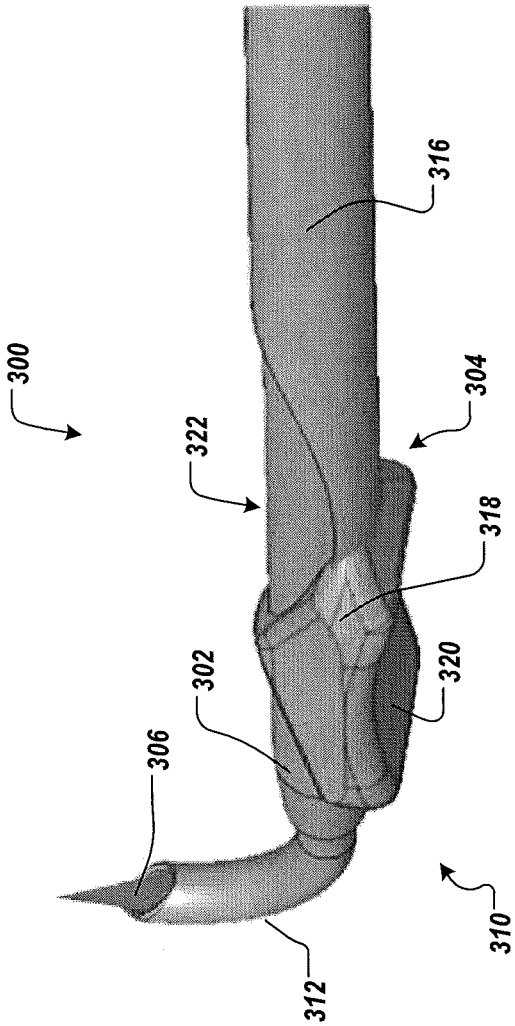

FIG. 3B

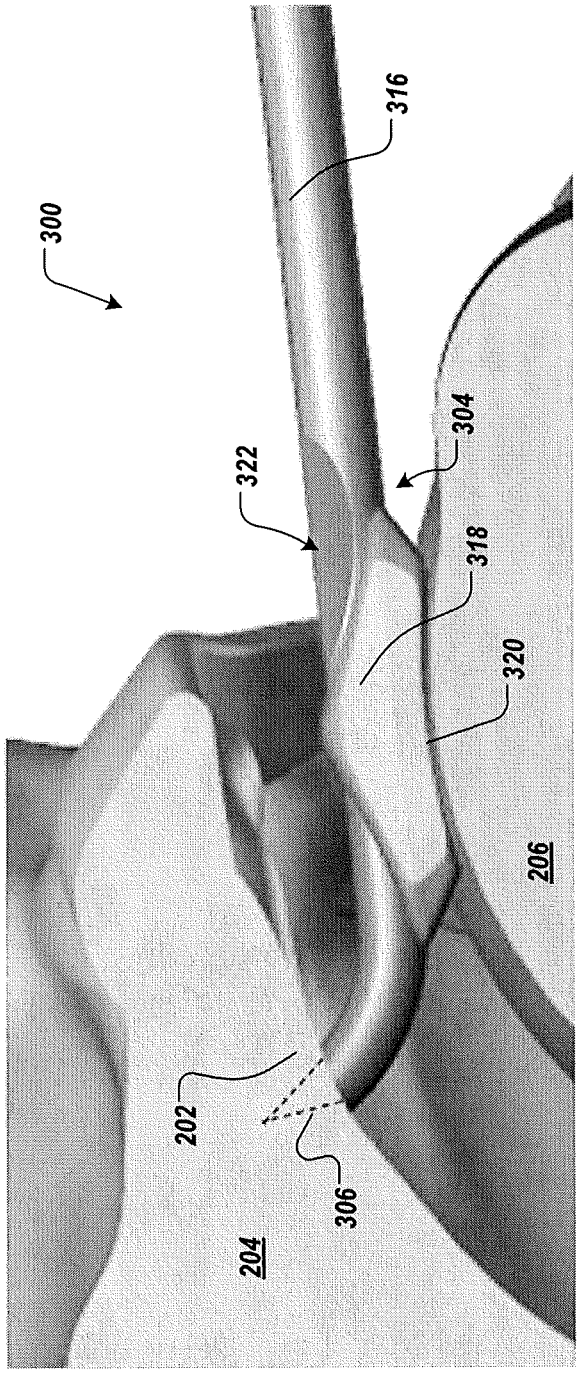

FIG. 4

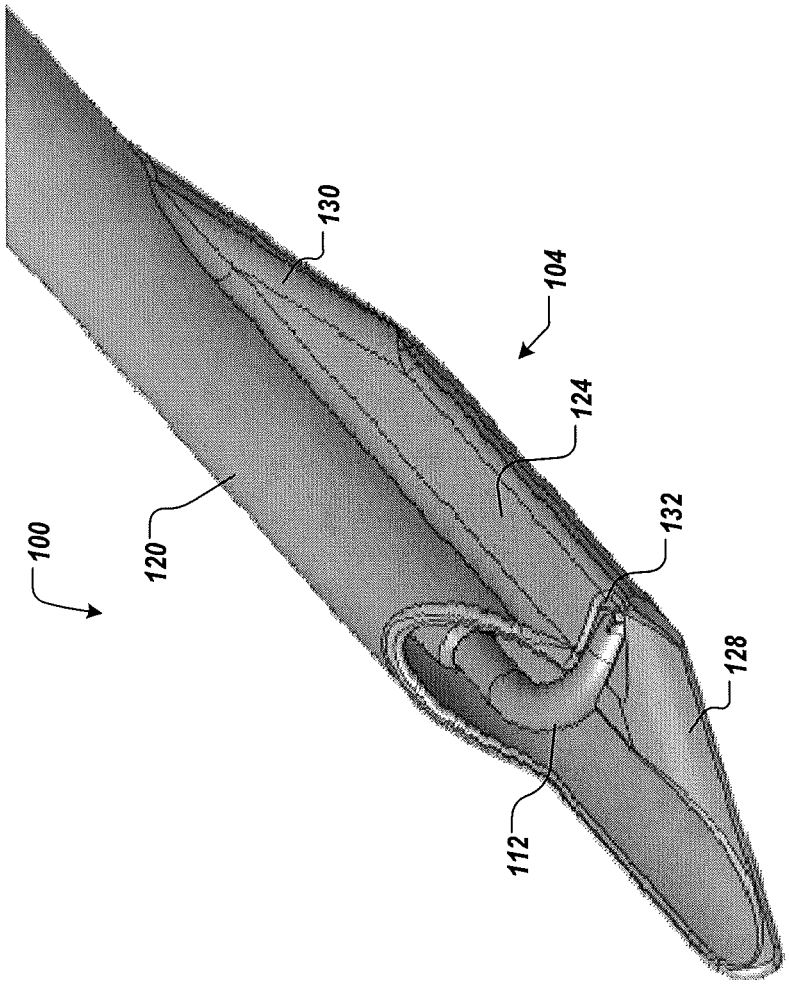

FIG. 5

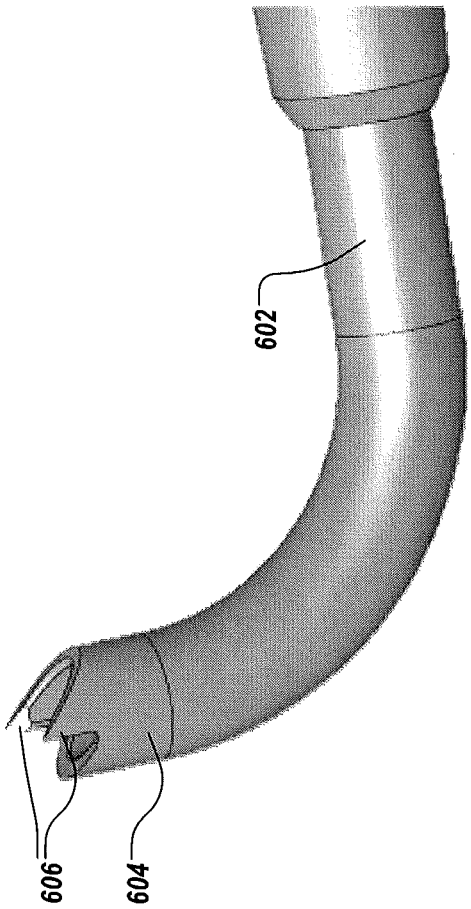

FIG. 6

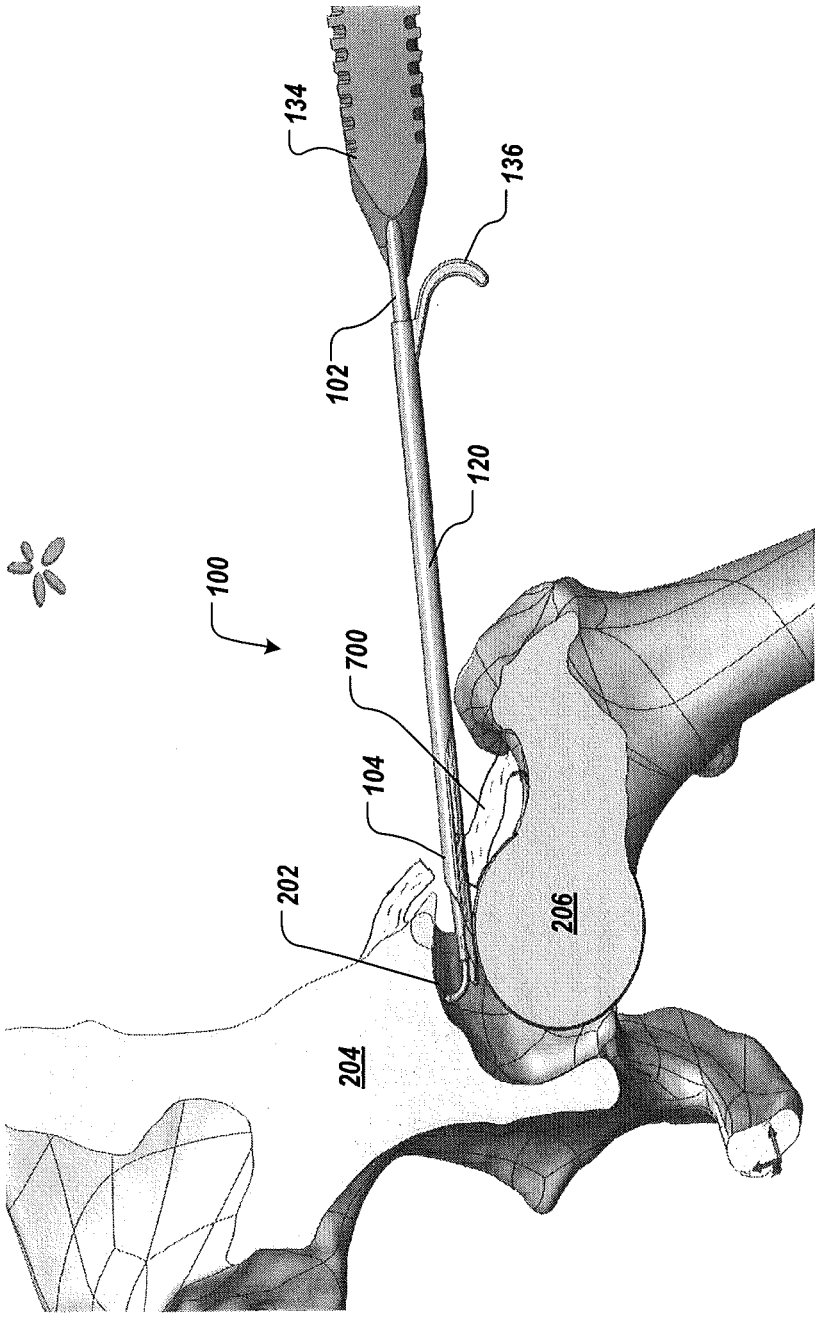

FIG. 7A

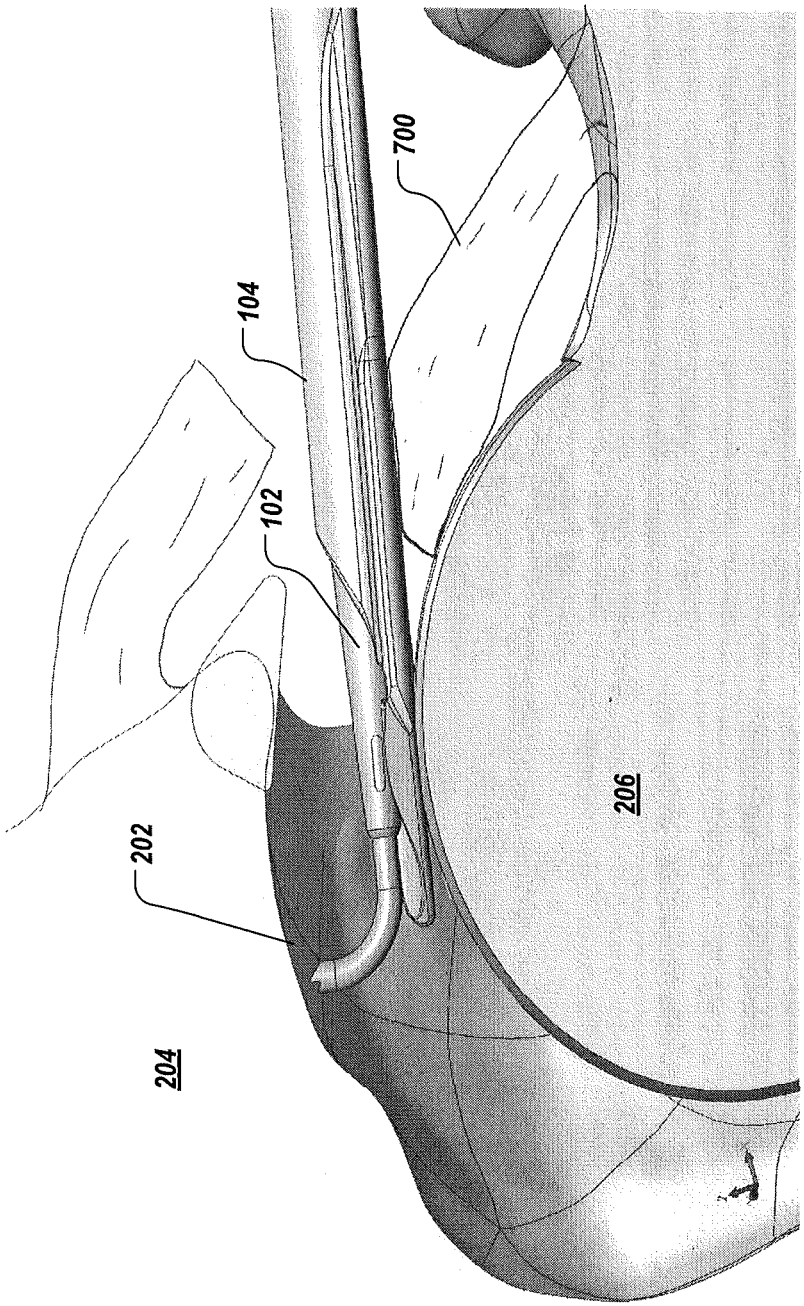

FIG.7B

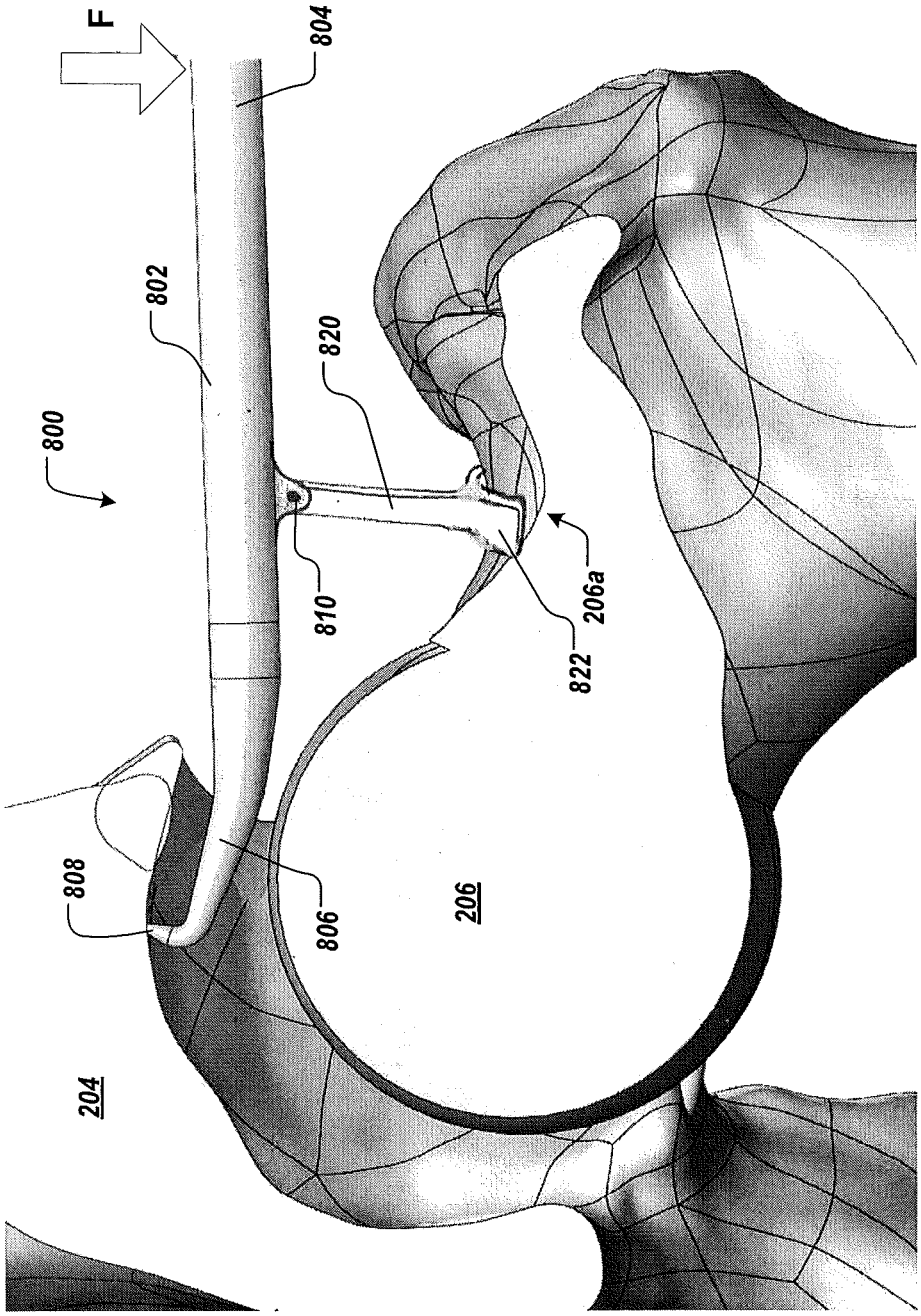

FIG.8

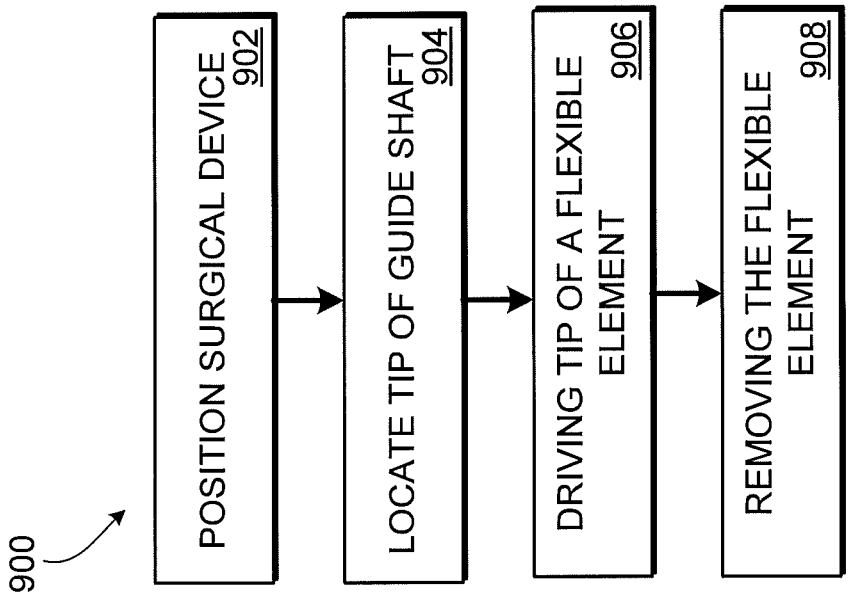
900
POSITION SURGICAL DEVICE
902
LOCATE TIP OF GUIDE SHAFT
904
DRIVING TIP OF A FLEXIBLE ELEMENT
906
REMOVING THE FLEXIBLE ELEMENT
908

FIG. 9

STABILIZING MICROFRACTURE DEVICE

CROSS-REFERENCE TO RELATED APPLICATION

This application is the U.S. National Stage of International Application No. PCT/US12/022941, filed on Jan. 27, 2012, which claims priority to U.S. Provisional Application No. 61/436,653, filed Jan. 27, 2011, the entire teachings of the above applications are incorporated herein by reference.

FIELD

This document relates to a device for performing a microfracture procedure.

BACKGROUND

Articulating body joints are surfaced with hyaline cartilage, which is a very durable low coefficient of friction natural material. These surfaces are often damaged when subjected to high repeated loading, such as when one runs. This is particularly true for lower body compressive joints such as the ankle, knee, hip and spine.

Resurfacing of the cartilage surfaces is a large area of study in the orthopaedic industry. One technique used for resurfacing of the cartilage is referred to as microfracture. Rather than replacing the damaged articular cartilage with an artificial implant, microfracture stimulates the body to replace the surface with a fibrous cartilage. Fibrocartilage is not as robust and does not have the low coefficient of friction that hyaline cartilage does, but it does provide patients with reduced pain and enables them to participate in an active lifestyle.

Microfracture procedures are generally performed by first removing the damaged layer of cartilage. The damaged layer can vary from about 1 to about 6 mm in thickness. A sharp microfracture pick is then driven about 2 to about 5 mm through the underlying subchondral bone to a blood supply. When the pick is removed, a small channel remains. A series of channels can be formed in the subchondral bone such that blood travels along the channel and clots in the area of the removed cartilage.

SUMMARY

In a general aspect, a microfracture device includes a guide shaft having a proximal end and a distal end and defining an internal passage between the proximal and distal ends, the distal end having a curved tip, a stabilizing portion disposed along an outer surface of the guide shaft, at least a portion of the stabilizing portion being wider than the guide shaft, and a flexible element movably positioned within the internal passage of the guide shaft, the flexible element having a distal tip configured for driving into bone.

Implementations may include one or more of the following features. The device further includes a handle operatively coupled to the proximal end of the guide shaft. The handle defines a passageway configured to receive a portion of the flexible element therethrough. The handle is operatively coupled to the proximal end of the guide shaft such that the guide shaft can be translated proximally and distally relative to the stabilizing portion and rotated relative to the stabilizing portion. The guide shaft includes at least one angled tip at the distal end of the guide shaft. The stabilizing portion includes a body defining an internal passage that receives a portion of the guide shaft therethrough. A portion of the body includes a substantially flat outer surface. A portion of the body comprises a substantially curved outer surface. The body defines a longitudinally extending slit that permits the guide shaft to be disposed in and removed from the internal passage of the body. The stabilizing portion includes a flexible body having at least one substantially curved outer surface. The flexible element includes a proximal end that is operatively configured to permit translation of the flexible element proximally and distally through the internal passage of the guide shaft. The proximal end of the flexible element is further operatively configured to permit rotation of the flexible element within the internal passage of the guide shaft. The flexible element includes a flexible wire. The stabilizing portion includes a recessed portion for receiving a portion of the curved tip of the distal end of the guide shaft.

In another general aspect, a surgical device includes a guide shaft having a proximal end and a distal end, the guide shaft defining an internal passage between the proximal and distal ends and having an angled tip at the distal end of the guide shaft, a support portion disposed about an outer surface of the guide shaft, at least a portion of the support portion being wider than the guide shaft, a handle operatively coupled to the proximal end of the guide shaft, the handle defining an internal passage, and a flexible element having a proximal and a distal end, the flexible element movably positioned within the internal passage of the guide shaft and the internal passage of the handle, the flexible element having an angled distal tip at the distal end of the flexible element.

Implementations may include one or more of the following features. The support portion includes a body defining an internal passage that receives a portion of the guide shaft therethrough. A portion of the body includes a substantially flat outer surface. The stabilizing portion includes a flexible body having at least one substantially curved outer surface.

In another general aspect, a method of performing a microfracture procedure includes positioning a surgical device having a guide shaft with a proximal end and a distal end and an angled tip at the distal end and a stabilizing portion disposed along an outer surface of the guide shaft proximate to a first bone surface such that an outer surface of the stabilizing portion is positioned against a portion of the first bone surface, locating the angled tip of the guide shaft at a desired point of stimulation, driving an angled tip of a flexible element through the guide shaft and into a second bone surface, and removing the flexible element.

Implementations may include one or more of the following features. The method further includes engaging the angled tip of the guide shaft into the second bone surface. The flexible element includes a flexible wire, and wherein driving the angled tip of the flexible wire comprises striking a proximal end of the flexible wire to translate the flexible wire relative to the guide shaft. The flexible element includes a flexible wire, and wherein driving the angled tip of the flexible wire comprising rotating a proximal end of the flexible wire to rotate the flexible wire relative to the guide shaft. The first bone surface includes a portion of a femoral head and the second bone surface includes a portion of the acetabulum. The stabilizing portion includes an outer surface having one of a substantially flat portion or a substantially curved portion and the positioning step includes positioning one of the substantially flat or curved portions against the portion of the femoral head. The positioning step includes the step of inserting at least a portion of the surgical device into an arthroscopic cannula.

The details of one or more implementations are set forth in the accompanying drawings and the description below. Other features, aspects, and advantages will become apparent from the description, the drawings, and the claims.

BRIEF DESCRIPTION OF THE DRAWINGS

FIG. **1**A is a side view of a microfracture device.

FIG. **1**B is a partial perspective view of the microfracture device of FIG. **1**A.

FIGS. **2**A-**2**B illustrate positioning and use of the microfracture device within an acetabular region for performing a microfracture procedure.

FIG. **3**A is a side view of an alternative implementation of a microfracture device.

FIG. **3**B is a partial perspective view of the microfracture device of FIG. **3**A.

FIG. **4** illustrates positioning and use of the microfracture device of FIGS. **3**A and **3**B within the acetabular region for performing a microfracture procedure.

FIG. **5** is a partial perspective view of the microfracture device of FIG. **1**A in a retracted position.

FIG. **6** is a perspective view of an angled distal tip for use in a microfracture device.

FIGS. **7**A and **7**B illustrate alternative positioning and use of the microfracture device of FIG. **1**A within an acetabular region.

FIG. **8** illustrates a side view of an alternative implementation of a microfracture device.

FIG. **9** illustrates a method of microfracture stimulation of the present disclosure.

DETAILED DESCRIPTION

This document describes examples of microfracture devices that can be used during a microfracture procedure to create channels or holes in subchondral bone, for example, to stimulate the production of fibrocartilage between an acetabular cup and a femoral head.

Referring to FIG. **1**A, a microfracture device **100** includes a guide shaft **102**, a stabilizing portion **104**, and a flexible element **106**, which can be used to create holes or channels in, for example, subchondral bone tissue. The guide shaft **102** has a proximal end **108** and a distal end **110**, and can be cannulated such that a lumen or internal passage (not shown) is disposed axially along its length. The flexible element **106**, for example, a flexible wire, can be positioned within the internal passage such that proximal and distal ends of the flexible element **106** extend, respectively, beyond the proximal and distal ends **108**, **110** of the guide shaft **102**. The flexible element **106** can be made from stainless steel, Nitinol, and/or other materials suitable for creating microfracture channels in subchondral bone. The flexible element **106** can include a widened or thickened portion **106***a* that helps to limit the flexible element **106** from buckling when compressed. At least a part of the outer surface of the stabilizing portion **104** is configured or adapted to contact a portion of a bone surface, such as a contoured surface of the femoral head (not shown), and can help stabilize the microfracture device **100** during microfracture surgery as described further below.

Referring also to FIG. **1**B, the guide shaft **102** of the microfracture device **100** can be a generally cylindrical structure having a one-piece construction, or the guide shaft **102** can be made of multiple components that are attached to each other via, for example, welding or a press fit engagement. The guide shaft **102** can be made from any biocompatible material including polymers, metals, ceramics, or combinations thereof. The distal end **110** of the guide shaft **102** includes a curved tip region **112** that can guide the flexible element **106** to a selected position and orientation with respect to a microfracture surgery site. For example, referring to FIGS. **1**A and **1**B, a sharpened distal tip **114** of the flexible element **106**, which exits the guide shaft **102** through an opening (not shown) in a distal tip **116** of the guide shaft **102**, can form an angle α with respect to a shaft axis **118** such that a transverse channel can be formed into the subchondral bone of, for example, the acetabular cup. The angle α can be between about 20 degrees to about 90 degrees. In some cases, the angle α can be greater than 90 degrees such that the tip **114** of the flexible element **106** points towards the proximal end **108** of the guide shaft **102**. The curved tip region **112** can be an integral portion of the guide shaft **102** or can be separately attached to the guide shaft **102**. In some cases, the curvature of the curved tip region **112** can be adjusted by the surgeon such that the angle α can be changed as required by the particular microfracture procedure.

Referring to FIG. **1**B, the stabilizing portion **104** includes a body **120**. A portion of the body **120** can receive the guide shaft **102**. For example, an internal passage (not shown) through the body **120** can receive at least a portion of the guide shaft **102**. In some cases, the stabilizing portion **104** can be slipped over the guide shaft **102** and adjustably positioned at a particular location along the guide shaft **102**. Additionally, the body **120** can define a slit **122** along the stabilizing portion **104** such that the guide shaft **102** can be disposed in and removed from the internal passage (not shown) through the slit **122**. In some implementations, the stabilizing portion **104** can be insert-molded around the guide shaft **102**. In other implementations, the stabilizing portion **104** can be integrally formed as part of the guide shaft **102**. For example, the guide shaft **102** and the stabilizing portion **104** can be formed together in a single machining or molding step. Alternatively, or additionally, various attachment procedures, such as welding or the use of adhesives, may be used to attach the stabilizing portion **104** to the guide shaft **102**.

The body **120** of the stabilizing portion **104** includes a wide portion **124** having a generally trapezoidal shape as best seen in FIG. **1**B. The wide portion **124** can include other geometries, such as a semicircle or a rectangle, and can extend laterally beyond one or both sides of the body **120**. Additionally, the wide portion **124**, which can be integrally formed with or separately attached to the body **120**, includes an outer surface **126** for contacting a bone surface, such as a surface of a femoral head (FIG. **2**A) and/or a hip capsule **700** as shown with reference to FIGS. **7**A and **7**B. The outer surface **126** generally has a width W_s that is greater than a width W_g or diameter of the guide shaft **102**. In some cases, the width W_s can be approximately twice as large as the width W_g. The increased width W_s of the outer surface **126** can help distribute forces applied to the contacting bone or soft tissue surface over a larger area, thereby reducing possible damage to the bone surface or, for example, the cartilage overlying the bone surface. All or portions of the outer surface **126** can be substantially flat. In some cases, all or portions of the outer surface **126** can be substantially curved, contoured, or shaped. For example, all or portions of the outer surface **126** can be curved to match or substantially match or conform to a corresponding curvature of a portion of the femoral head as discussed further below. Also, as discussed below, the stabilizing portion **104** can have a leading edge **128**, a trailing edge **130**, and a recessed portion **132** for improved insertion into and removal from, respectively, a surgical site through, for example, an arthroscopic cannula. The stabilizing portion **104** can be made from any biocompatible material including polymers, elastomers, metals, ceramics, or combinations thereof. Additionally, or alternatively, the stabilizing portion **104** can be made from autoclavable materials such that the stabilizing portion **104** may be reused after surgery. In some cases, the outer surface **126** can include a different surface

treatment, surface texture, and/or surface material to minimize slipping while in contact with the bone surface. Alternatively, stabilizing portion **104** can incorporate a soft surface **126** made from an elastomer or balloon to conform to the corresponding curvature of a portion of the femoral head or hip capsule.

Referring again to FIG. **1**A, the microfracture device **100** includes a handle **134** that can be coupled to, or formed integral with, the guide shaft **102** near the proximal end **108** to control the movement of the guide shaft **102**. Additionally, the stabilizing portion **104** can include a handle portion **136** located at a proximal end of the stabilizing portion. For example, the handle portion **136** can be hook-like structure or other finger-engageable structure that is coupled to a proximal region of the body **120** of the stabilizing portion **104**. In use, the user can move, both translationally and rotationally, the handle **134** relative to the handle portion **136**, or vice versa, such that the guide shaft **102** moves correspondingly or differently with respect to the stabilizing portion **104**. Thus, by manipulating the handle **134** and/or the handle **136**, a user can vary the position of the distal tip **114** of the flexible element **106** as well as the distal tip **116** of the guide shaft **102** relative to, for example, the stabilizing portion **104**.

Referring now to FIGS. **2**A and **2**B, during a microfracture procedure, a user, such as a surgeon inserts the microfracture device **100**, for example, through an arthroscopic cannula through a skin of a patient, and positions the device **100** near a microfracture site **202**. The microfracture site **202** can be a region where there is breakage in a cartilage layer (not shown) or where a portion of the cartilage layer has been removed and where microfracture may stimulate the growth of fibrocartilage. As shown in FIG. **2**A, an exemplary microfracture site **202** is at a desired location on the acetabular cup **204**, between the acetabular cup **204** and the femoral head **206**. In use, the surgeon can first position the wide portion **124** of the stabilizing portion **104** such that the outer surface **126** of the wide portion **124** contacts an outer surface of the femoral head **206** (FIG. **2**A) and/or hip capsule **700** (FIGS. **7**A and **7**B). Following positioning of the wide portion **124**, the surgeon can position the guide shaft **102**, for example by manipulating the handle **134**, such that the distal tip **116** of the guide shaft **102** contacts an outer surface of the acetabular cup **204** at the microfracture site **202**. In some cases, the distal tip **116** of the guide shaft **102** can be partially driven into the bone surface by levering handle **134** around surface **126** of stabilizing portion **104**. One or more angled teeth **606** located at the distal end of the guide shaft **102** as described in more detail below with respect to FIG. **6** may augment the ability to drive guide shaft **102** into bone and thus increase the stability of microfracture device **100**.

After placing the microfracture device **100** in the selected position relative to the microfracture site **202**, the distal tip **114** of the flexible element **106** can be driven through the guide shaft **102** and into the microfracture site **202** to create one or more channels in the subchondral bone. The flexible element **106** may also rotate within the internal passage of the guide shaft **102** and be driven into the subchondral bone with translational and/or rotational movement to create the microfracture channels. For example, a distal tip of the flexible element **106** can be driven into bone by rotating a proximal end of the flexible element **106**. The proximal end of the flexible element **106** can exit the guide shaft **102** through an opening (not shown) at the proximal end **108** of the guide shaft **102** and through an opening **208** (FIG. **2**B) at a proximal end of the handle **134**. A manual rotation device can be attached to the proximal end of the flexible element **106**.

In some implementations, the flexible element **106** may be a flexible wire that can translate linearly, i.e. proximally and distally, through the internal passage of the guide shaft **102** to create the microfracture channels. For example, a distal tip of the flexible wire can be driven into bone by striking a proximal end of the flexible wire. The curved shape of the guide shaft **102** helps translate an impact force oriented axially relative to the wire at the proximal end of the wire to a driving force oriented axially relative to the wire at the distal end of the wire. In other words, an impact force at the proximal end of the flexible wire that is oriented in a direction generally parallel to the surface of the microfracture site **202** is transferred to a driving force at the distal end of the flexible wire that is oriented in a direction generally transverse to the surface of the microfracture site **202**. The resulting axial impact force at the distal end of the wire allows the distal tip of the flexible wire to be driven into the bone.

During the microfracture procedure steps outlined above, the wide portion **124** of the stabilizing portion **104** can help stabilize and/or minimize unwanted movement of the guide shaft **102** relative to the microfracture site **202**. For example, normal and/or friction forces generated between the femoral head **206** and/or hip capsule **700** (FIGS. **7**A, **7**B) and the outer surface **126** may counteract some of the reaction forces generated at the microfracture site **202** as a result of the rotational or translational drilling process discussed above. Further, the increased surface area of the outer surface **126** can help distribute any forces that may be generated between the stabilizing portion **104** and the femoral head **206** and/or hip capsule **700** (FIG. **7**A, **7**B) over a larger area to help minimize damage to, for example, cartilage or bone surfaces of the femoral head **206**.

Referring to FIGS. **3**A and **3**B, in an alternative implementation, a microfracture device **300** includes a guide shaft **302**, a stabilizing portion **304**, and a flexible element **306**. The guide shaft **302** has a proximal end **308** and a distal end **310**, and can be cannulated such that a lumen or internal passage (not shown) is disposed axially along its length. The flexible element **306**, for example, a flexible wire, can be positioned within the internal passage such that flexible element **306** extends both proximally and distally, respectively, beyond the proximal and distal ends **308**, **310** of the guide shaft **302**, and proximally beyond the handle **314**. Additionally, the distal end **310** of the guide shaft **302** includes a curved tip region **312** that can guide the flexible element **306** to a selected position and orientation, as described above with respect to the microfracture device **100** shown in FIGS. **1**A and **1**B. In some implementations, the microfracture device **300** can include a handle **314** coupled to, or formed integral with, the proximal end **308** of the guide shaft **302** to control the movement of the guide shaft **302** relative to the stabilizing portion **304** and the surgical site.

The stabilizing portion **304** includes a body **316** and a portion of the body **316** that can receive the guide shaft **302**. For example, an internal passage (not shown) through the body **316** can receive at least a portion of the guide shaft **302** such that the guide shaft **302** can slide and/or rotate relative to the body **316**. Additionally, the body **316** can include a flexible wide portion **318** having a conforming outer surface **320**. The conforming outer surface **320** can be substantially curved or contoured such that it generally conforms to a contacting bone surface, for example, a portion of a femoral head (FIG. **2**A). In some cases, the flexible wide portion **318** can be loosely fitted with respect to the guide shaft **302** such that the flexible wide portion **318** can tilt in all directions relative to the guide shaft **302**. Such tilting motion can help enhance a conformability of the conforming outer surface **320** by first

generally tangentially orienting the outer surface **320** relative to the contacting bone surface. Additionally, or alternatively, the body **316** can define a cutout **322** such that additional constraints to the relative tilting motion of the flexible wide portion **318** are reduced.

The flexible wide portion **318** and the body **316** of the stabilizing portion **304** can be made from a single piece of material, or may be formed separately and attached to each other. The flexible wide portion **318** can be made from any flexible or elastic material, such as an elastomer. The body **316** can be made from any biocompatible material including elastomers and other polymers, metals, ceramics, or combinations thereof. In some cases, the flexible wide portion **318** may be coupled directly to the guide shaft **302** via, for example, an adhesive or a press fit.

Referring now to FIG. **4**, during a microfracture procedure, the microfracture device **300** may be used as described above with respect to FIGS. **2**A and **2**B to create microfracture channels, such as channel **306**, in the subchondral bone of, for example, the acetabular cup **204**. Additionally, in use, the surgeon can position the flexible wide portion **318** on the outer surface of the femoral head **206** such that the enhanced conformability between the conforming outer surface **320** and the outer surface of the femoral head **206** provides additional stability before and during the channel drilling process.

Referring to FIG. **5**, the guide shaft **102** of the microfracture device **100** is shown in a retracted position for use during, for example, insertion into and removal from the microfracture site. In the retracted position, the microfracture device **100** has a reduced cross-sectional area such that it can fit down, for example, a relatively thinner arthroscopic cannula and not snag on soft tissue. Additionally, or alternatively, the leading edge **128** and the trailing edge **130** reduces the likelihood of the wide portion **124** getting snagged on, for example, soft tissue.

Referring to FIG. **6**, an angled distal tip **604** of a guide shaft **602** includes one or more teeth **606** for driving into subchondral bone tissue, such as the acetabular cup **204** (FIG. **2**A). In use, the surgeon can locate the distal tip **604** at the microfracture site **202** (FIG. **2**A) and embed at least a portion or all of the teeth **606** into the surface of the bone. The teeth **606** can help minimize, for example, unseating of the distal tip **604** from the bone surface and/or skiving or dragging of the distal tip **604** across the bone surface as the flexible element is driven into the subchondral bone tissue to form the microfracture channels.

Referring to FIG. **8**, in an alternative implementation, a microfracture device **800** includes a microfracture pick **802** having a proximal end **804** and a distal end **806**. The pick **802** has a sharp bent tip **808** located on its distal end **806**. The pick **802** includes a hinge or bracket **810** located between its proximal end **804** and its distal end **806**. A support bracket or post **820** is rotationally or pivotally mounted to the hinge **810** such that it can be rotated to a position proximate the pick **802** or through a number of angular positions relative to the pick **802**. In some implementations, the bracket **820** can be rotated through an arc of approximately 180 degrees relative to the pick **802**.

In use, a surgeon delivers the pick **802** and rotatably connected bracket **820** through, for example, a standard slotted arthroscopic cannula, to a desired location, such as an underside of an acetabular cup **204** as shown in FIG. **8**, and places the tip **808** at the desired location for making a channel within the subchondral bone. In order to deliver the required force for driving the tip **808** into the subchondral bone, the surgeon can position a portion of the bracket **810**, for example, a curved or semi-cylindrical portion **822** of the bracket **810** onto a portion of a bone surface, such as a portion of a femoral neck **206***a*. Once in the desired position, the surgeon can apply a downward force (denoted by arrow F in FIG. **8**) to the proximal end **804** of the pick **802**. The applied downward force causes the distal end **806** of the pick **802** to rotate about the support bracket **820** such that the sharp tip **808** is driven into the subchondral bone at the desired location. Utilizing the support bracket **820** of the present implementation avoids contact with the overlying cartilage or other soft tissues of the femoral head.

Referring to FIG. **9**, the present disclosure further includes a method of performing a procedure such as microfracture stimulation **900**. The process **900** includes positioning a surgical device having a guide shaft with a proximal end and a distal end and an angled tip at the distal end and a stabilizing portion disposed along an outer surface of the guide shaft proximate to a first bone surface such that an outer surface of the stabilizing portion is positioned against a portion of the first bone surface **902**. The positioning step **902** may include inserting at least a portion of the surgical device into a standard arthroscopic cannula. The first bone surface can include a portion of a femoral head. The stabilizing portion can include an outer surface having one of a substantially flat portion or a substantially curved portion and the positioning step **902** includes positioning one of the substantially flat or curved portions against the portion of the femoral head.

The process **900** also includes locating the angled tip of the guide shaft at a desired point of stimulation **904**. Step **904** may include insertion of at least a portion of the guide shaft into a standard arthroscopic cannula.

The process **900** includes driving an angled tip of a flexible element through the guide shaft and into a second bone surface **906**. The second bone surface can include a portion of the acetabulum. The process **900** includes removing the flexible element **908**, thereby leaving a small channel in the underlying subchondral bone. Eventually, blood will travel in the channel to form fibrous cartilage.

While this document contains many specific implementation details, these should not be construed as limitations on the scope of any implementations or of what may be claimed, but rather as descriptions of features specific to particular implementations. For example, the guide shafts **102**, **302** may include additional bends and curves for improved positioning of the distal ends **110**, **310**, or to permit avoidance of certain structures such as the greater trochanter. In other implementations, the guide shafts **102**, **302** may be a solid shaft designed to dig into the microfracture site **202** upon application of a downward force at the proximal end **108**, **308**. Certain features that are described in this document in the context of separate implementations can also be implemented in combination in a single implementation. Conversely, various features that are described in the context of a single implementation can also be implemented in multiple implementations separately or in any suitable subcombination. Moreover, although features may be described above as acting in certain combinations and even initially claimed as such, one or more features from a claimed combination can in some cases be excised from the combination, and the claimed combination may be directed to a subcombination or variation of a subcombination. Thus, while particular implementations of the subject matter have been described, other implementations are within the scope of the following claims.

What is claimed is:

1. A microfracture device comprising:

a guide shaft having a proximal end and a distal end and defining an internal passage between the proximal and distal ends having an angled tip at the distal end of the guide shaft;

a stabilizing portion disposed along an outer surface of the guide shaft, at least a portion of the stabilizing portion being wider than the guide shaft; and

a flexible element movably positioned within the internal passage of the guide shaft, the flexible element having a distal tip configured for driving into bone,

wherein the stabilizing portion is configured for insertion with the guide shaft to a surgery site.

2. The device of claim 1, further comprising a handle operatively coupled to the proximal end of the guide shaft, wherein the handle defines a passageway configured to receive a portion of the flexible element therethrough.

3. The device of claim 1, further comprising a handle operatively coupled to the proximal end of the guide shaft, wherein the handle is operatively coupled to the proximal end of the guide shaft such that the guide shaft can be translated proximally and distally relative to the stabilizing portion and rotated relative to the stabilizing portion.

4. The device of claim 1, wherein the stabilizing portion comprises a body defining an internal passage that receives a portion of the guide shaft therethrough.

5. The device of claim 4, wherein the body defines a longitudinally extending slit that permits the guide shaft to be disposed in and removed from the internal passage of the body.

6. The device of claim 1, wherein the stabilizing portion includes a substantially flat outer surface.

7. The device of claim 1, wherein the stabilizing portion includes a substantially curved outer surface.

8. The device of claim 1, wherein the stabilizing portion comprises a flexible body having at least one substantially curved outer surface.

9. The device of claim 1, wherein the flexible element comprises a proximal end that is operatively configured to permit translation of the flexible element proximally and distally through the internal passage of the guide shaft.

10. The device of claim 9, wherein the proximal end of the flexible element is further operatively configured to permit rotation of the flexible element within the internal passage of the guide shaft.

11. The device of claim 1, wherein the flexible element comprises a flexible wire.

12. The device of claim 1, wherein the stabilizing portion includes a recessed portion for receiving a portion of the angled tip of the distal end of the guide shaft.

13. The device of claim 12, wherein the device is configured such that the angled tip of the distal end of the guide shaft is received in the recessed portion when the guide shaft is rotated.

14. The device of claim 1, wherein the stabilizing portion is contoured to conform with a bone or tissue surface at the surgery site.

15. The device of claim 1, wherein the stabilizing portion is contoured differently than the shaft.

16. The device of claim 15, wherein the stabilizing portion is contoured differently than the shaft so as to enable distribution of forces applied to a bone or tissue surface over a larger area than would be provided by the stabilizing portion being countered the same as the shaft.

17. The device of claim 15, wherein the stabilizing portion defines a concave outer surface relative to a convex curvature of the shaft.

18. The device of claim 1, wherein the stabilizing portion is conformable to a bone or tissue surface at the surgery site.

19. The device of claim 1, wherein the stabilizing portion is non-radially symmetrical with respect to a longitudinal axis of the shaft.

20. The device of claim 1, wherein the angled tip is curved.

21. A method of performing a microfracture procedure comprising:

positioning a surgical device having a guide shaft with a proximal end and a distal end and an angled tip at the distal end and a stabilizing portion disposed along an outer surface of the guide shaft proximate to a first bone surface such that an outer surface of the stabilizing portion is positioned against a portion of the first bone surface;

locating the angled tip of the guide shaft at a desired point of stimulation;

driving an angled tip of a flexible element through the guide shaft and into a second bone surface; and

removing the flexible element.

22. The method of claim 21, further comprising engaging the angled tip of the guide shaft into the second bone surface.

23. The method of claim 21, wherein the flexible element comprises a flexible wire.

24. The method of claim 21, wherein the flexible element comprises a flexible wire, and wherein driving the angled tip of the flexible wire comprises rotating a proximal end of the flexible wire to rotate the flexible wire relative to the guide shaft.

25. The method of claim 21, wherein the first bone surface comprises a portion of a femoral head and the second bone surface comprises a portion of the acetabulum.

26. The method of claim 25, wherein the stabilizing portion comprises an outer surface having one of the substantially flat portion or a substantially curved portion and the positioning step comprises positioning one of the substantially flat or curved portions against the portion of the femoral head.

27. The method of claim 21, wherein the positioning step includes the step of inserting at least a portion of the surgical device including the stabilizing portion into an arthroscopic cannula.

28. The method of claim 21, further including ensuring that the guide shaft is rotationally oriented so that the angled tip of the distal end of the guide shaft is received in a recessed portion of the stabilizing portion during surgical insertion of the device to a surgery site.

29. The method of claim 28 further comprising rotating the guide shaft so as to cause the angled tip of the distal end of the guide shaft to be removed from the recessed portion once the device is at the surgery site.

* * * * *