US009271417B2

(12) **United States Patent**
Kawaguchi et al.

(10) **Patent No.: US 9,271,417 B2**
(45) **Date of Patent: Feb. 23, 2016**

(54) **ELECTRONIC COMPONENT MOUNTING METHOD**

(75) Inventors: **Teppei Kawaguchi**, Yamanashi (JP); **Michiaki Mawatari**, Yamanashi (JP)

(73) Assignee: **PANASONIC INTELLECTUAL PROPERTY MANAGEMENT CO., LTD.**, Osaka (JP)

(*) Notice: Subject to any disclaimer, the term of this patent is extended or adjusted under 35 U.S.C. 154(b) by 190 days.

(21) Appl. No.: **13/821,052**

(22) PCT Filed: **Aug. 23, 2011**

(86) PCT No.: **PCT/JP2011/004675**

§ 371 (c)(1), (2), (4) Date: **Mar. 6, 2013**

(87) PCT Pub. No.: **WO2012/035704**

PCT Pub. Date: **Mar. 22, 2012**

(65) **Prior Publication Data**

US 2013/0167361 A1 Jul. 4, 2013

(30) **Foreign Application Priority Data**

Sep. 14, 2010 (JP) 2010-205121

(51) **Int. Cl.**
H05K 3/30 (2006.01)
H05K 7/00 (2006.01)
(Continued)

(52) **U.S. Cl.**
CPC ***H05K 7/00*** (2013.01); ***H05K 13/021*** (2013.01); ***H05K 13/0417*** (2013.01); *Y10T 29/49002* (2015.01); *Y10T 29/5313* (2015.01)

(58) **Field of Classification Search**
CPC Y10T 29/49009; Y10T 29/4913; Y10T 29/49131; Y10T 29/5313; Y10T 29/53174
USPC 29/592.1, 825, 832, 739, 740
See application file for complete search history.

(56) **References Cited**

U.S. PATENT DOCUMENTS

4,610,083 A * 9/1986 Campisi et al. 29/832
5,167,161 A * 12/1992 Okamoto et al. 73/865.9
(Continued)

FOREIGN PATENT DOCUMENTS

CN 1711815 A 12/2005
JP 2005-116599 A 4/2005
(Continued)

OTHER PUBLICATIONS

International Search Report PCT/JP2011/004675 dated Oct. 11, 2011.
(Continued)

Primary Examiner — Paul D Kim
(74) *Attorney, Agent, or Firm* — Pearne & Gordon LLP

(57) **ABSTRACT**

When a connected position detecting unit detects that a connected position of a tape reaches a predetermined position in the tape passage, head-feeding of an electronic component provided in a head of the connected new tape is provided. In the head-feeding, a tape feeder feeds the tape such that the electronic component in the head of the new tape is located in a component pickup port. When the connected position detecting unit detects that the connected position of the tape reaches the predetermined position in the tape passage, a mounting head picks up the electronic component from the new tape fed by the head feeding control unit and is mounted on a new board positioned by a board conveying path.

2 Claims, 6 Drawing Sheets

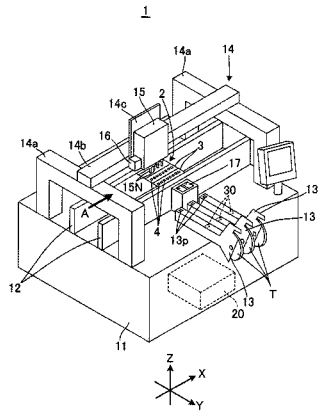

(51) **Int. Cl.**
H05K 13/02 (2006.01)
H05K 13/04 (2006.01)

(56) **References Cited**

U.S. PATENT DOCUMENTS

5,680,936 A * 10/1997 Beers 209/564
5,832,595 A * 11/1998 Maruyama et al. 29/829
5,901,892 A * 5/1999 Takanashi 226/27
5,938,890 A * 8/1999 Schlinkmann et al. 156/541
5,941,674 A * 8/1999 Briehl 414/416.08
5,975,395 A * 11/1999 Takada et al. 226/162
6,157,870 A * 12/2000 Gfeller et al. 700/231
6,694,606 B1 * 2/2004 Ohashi et al. 29/740
6,817,216 B2 * 11/2004 Kou 70/225
7,220,095 B2 * 5/2007 Lyndaker et al. 414/810
7,273,166 B2 * 9/2007 Suhara et al. 235/376
8,269,973 B2 * 9/2012 Kou 356/445
2004/0094451 A1 5/2004 Saho

FOREIGN PATENT DOCUMENTS

JP 2005-123302 A 5/2005
JP 2006-216703 A 8/2006
JP 2010-182853 A 8/2010

OTHER PUBLICATIONS

CN Office Action for Application No. 201180042439.5 dated Dec. 3, 2014.

* cited by examiner

FIG. 1

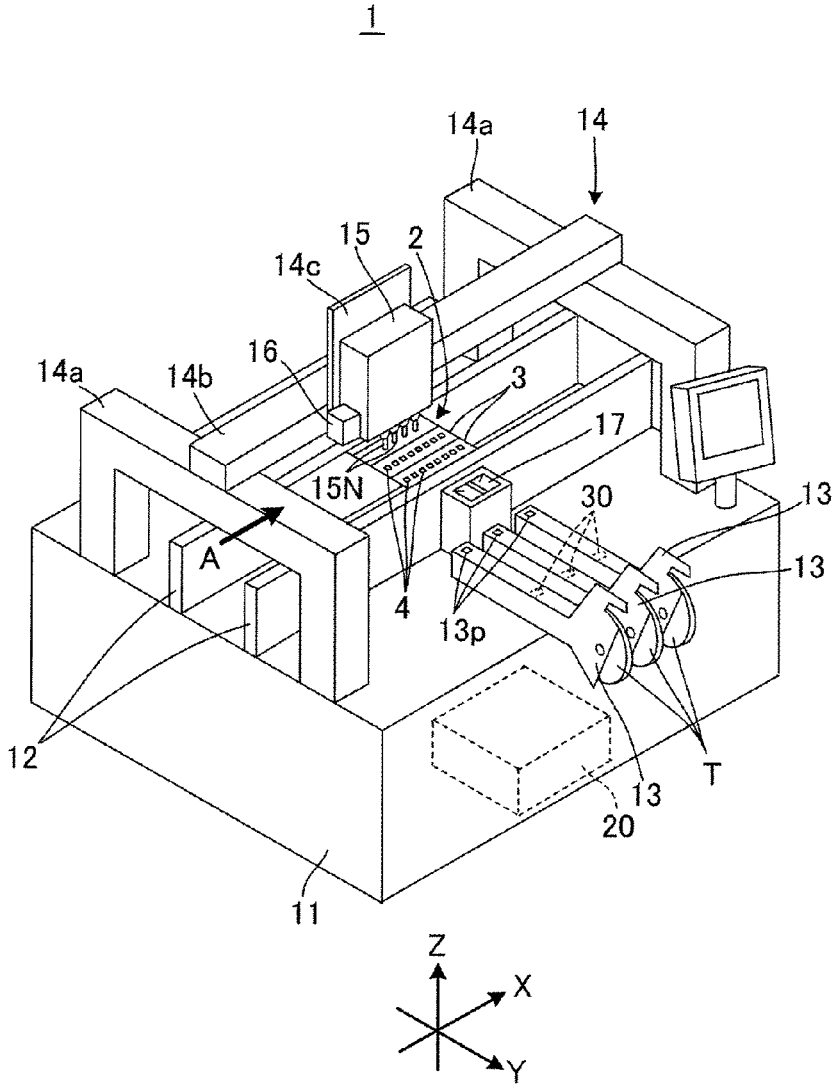

FIG. 2(a)

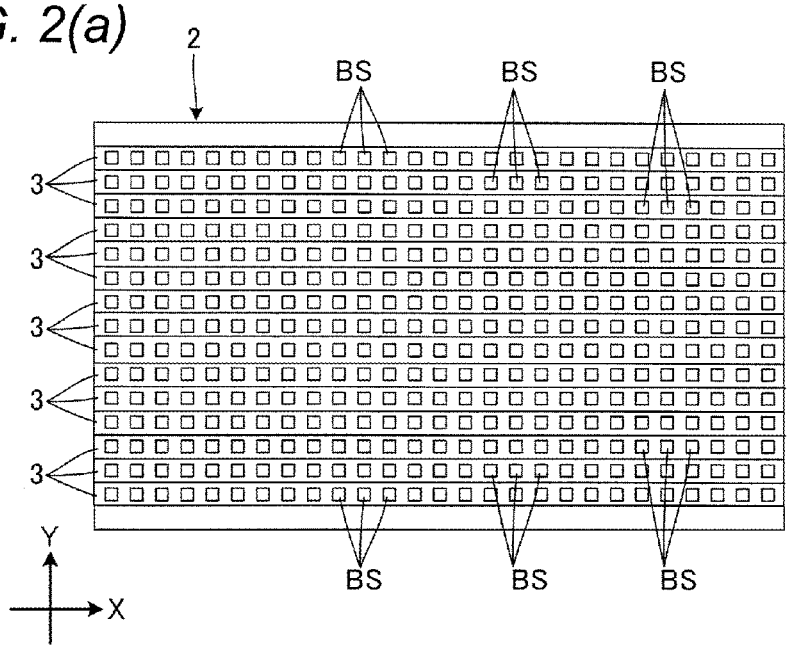

FIG. 2(b)

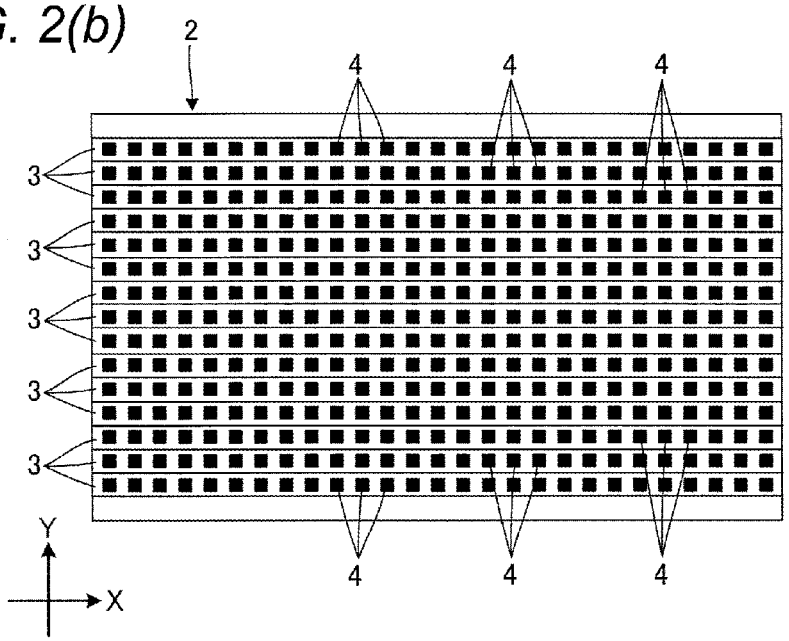

FIG. 3

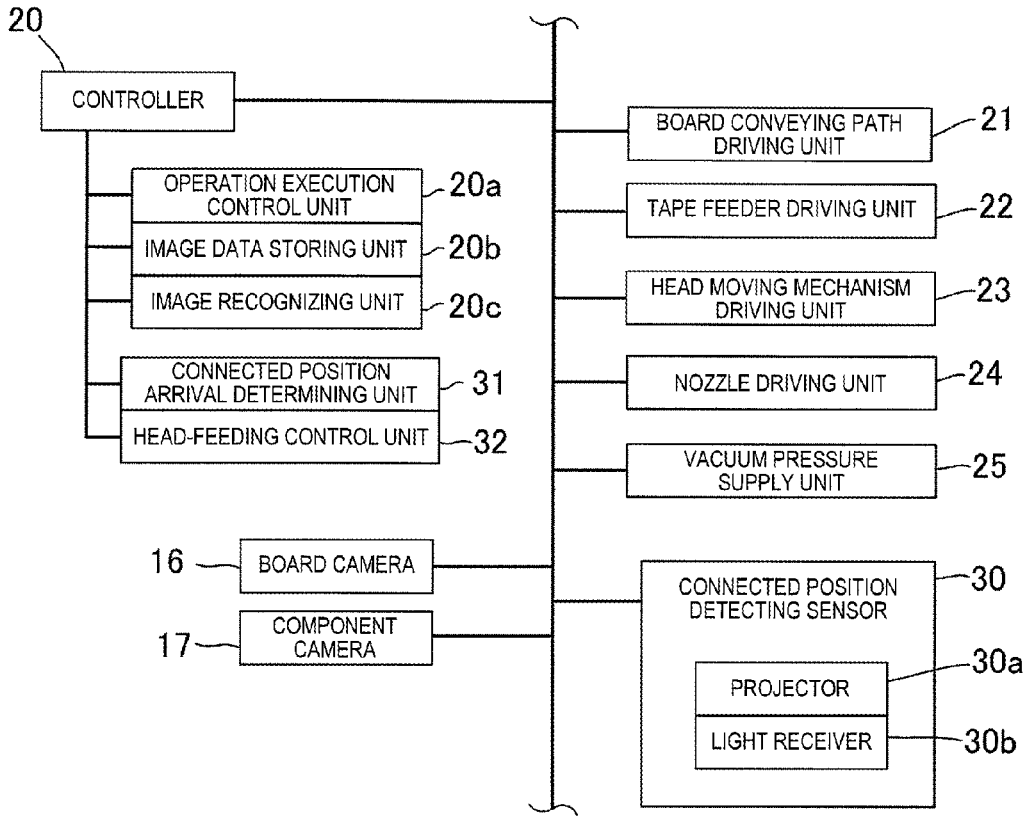
20
CONTROLLER
OPERATION EXECUTION CONTROL UNIT
20a
IMAGE DATA STORING UNIT
20b
IMAGE RECOGNIZING UNIT
20c
CONNECTED POSITION ARRIVAL DETERMINING UNIT
31
HEAD-FEEDING CONTROL UNIT
32
16
BOARD CAMERA
17
COMPONENT CAMERA
BOARD CONVEYING PATH DRIVING UNIT
21
TAPE FEEDER DRIVING UNIT
22
HEAD MOVING MECHANISM DRIVING UNIT
23
NOZZLE DRIVING UNIT
24
VACUUM PRESSURE SUPPLY UNIT
25
CONNECTED POSITION DETECTING SENSOR
30
PROJECTOR
30a
LIGHT RECEIVER
30b

FIG. 4(a)

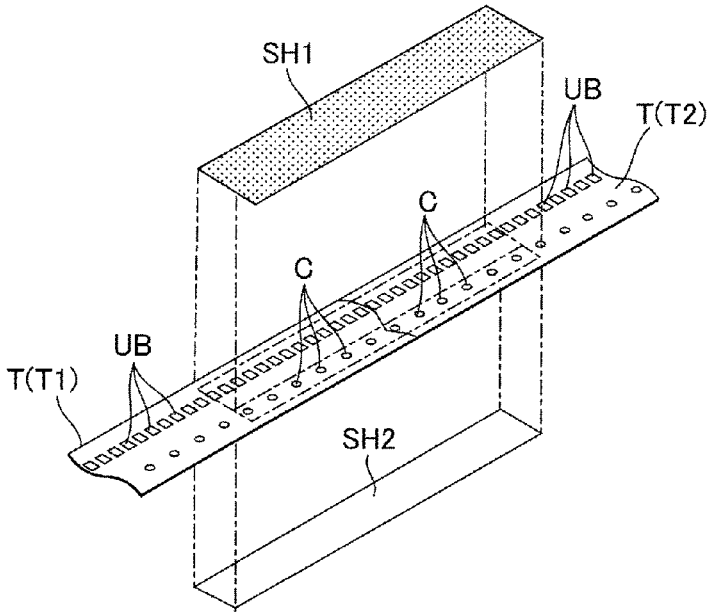

FIG. 4(b)

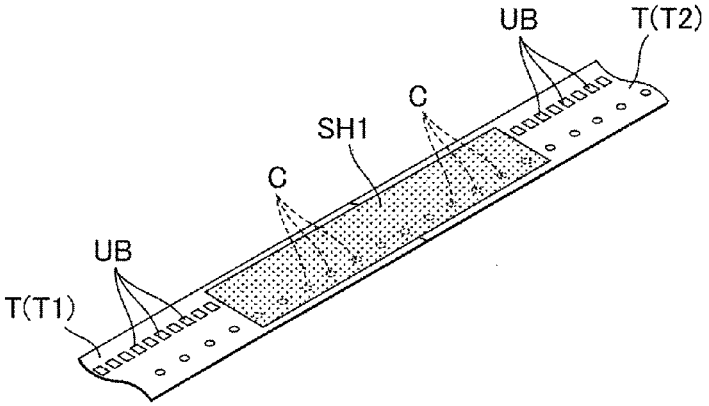

FIG. 5(a)

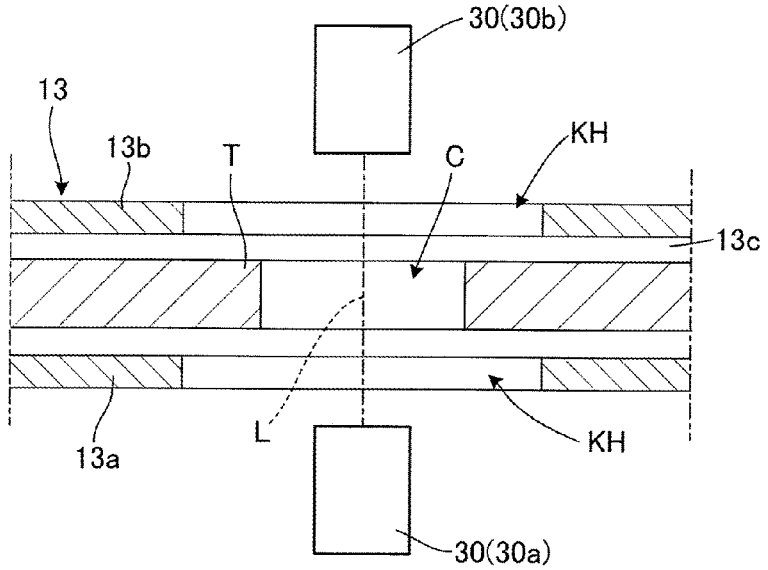
30(30b)
13
13b
T
C
KH
13c
L
13a
KH
30(30a)

FIG. 5(b)

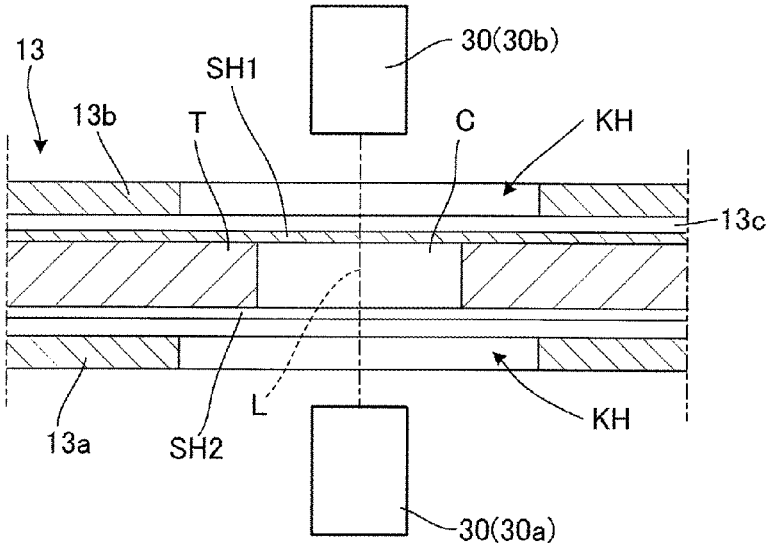
30(30b)
13
SH1
13b
T
C
KH
13c
L
13a
SH2
KH
30(30a)

FIG. 6

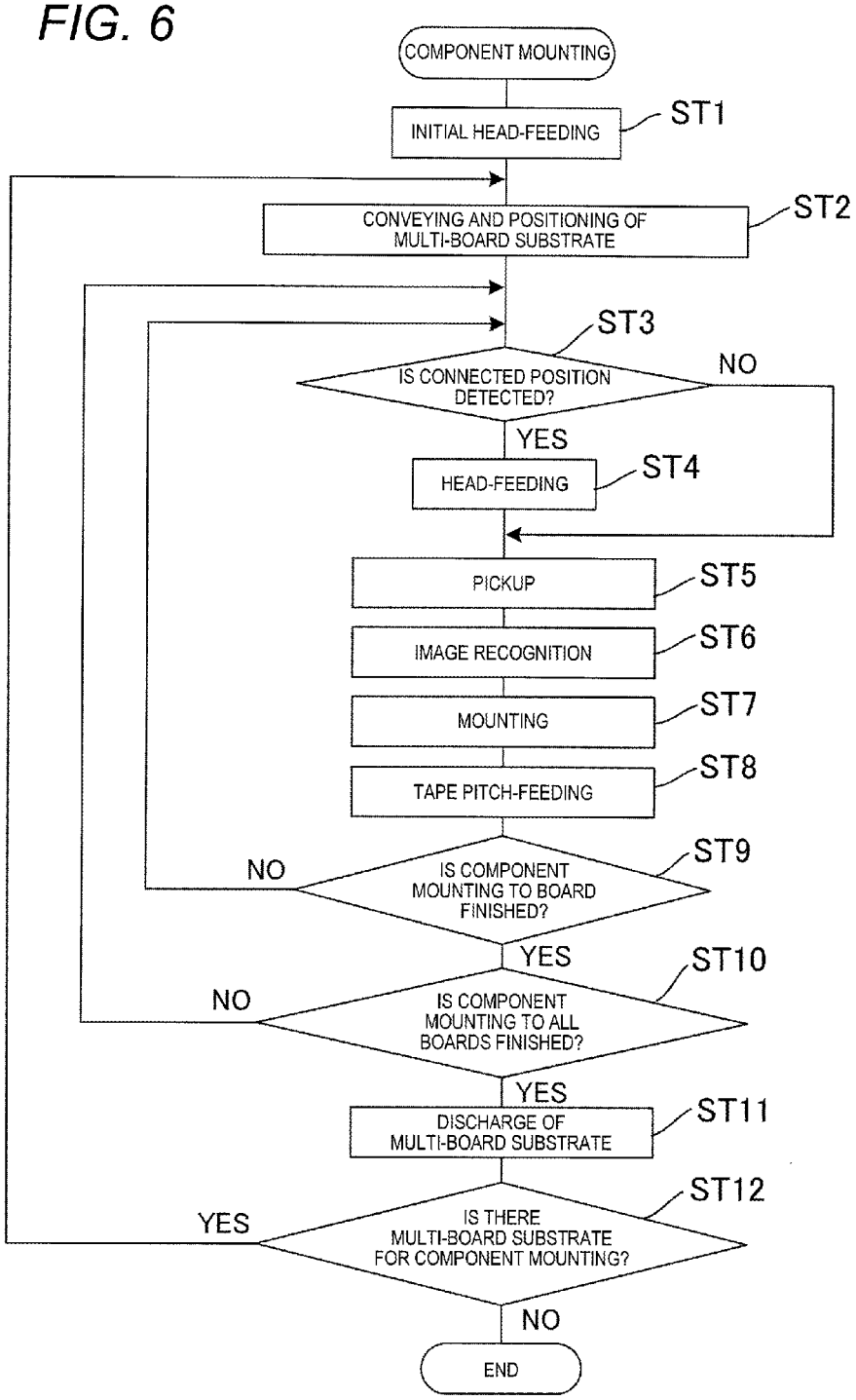
COMPONENT MOUNTING
INITIAL HEAD-FEEDING
ST1
CONVEYING AND POSITIONING OF MULTI-BOARD SUBSTRATE
ST2
ST3
IS CONNECTED POSITION DETECTED?
NO
YES
HEAD-FEEDING
ST4
PICKUP
ST5
IMAGE RECOGNITION
ST6
MOUNTING
ST7
TAPE PITCH-FEEDING
ST8
NO
IS COMPONENT MOUNTING TO BOARD FINISHED?
ST9
YES
ST10
NO
IS COMPONENT MOUNTING TO ALL BOARDS FINISHED?
YES
DISCHARGE OF MULTI-BOARD SUBSTRATE
ST11
ST12
YES
IS THERE MULTI-BOARD SUBSTRATE FOR COMPONENT MOUNTING?
NO
END

ELECTRONIC COMPONENT MOUNTING METHOD

TECHNICAL FIELD

The present invention relates to an electronic component mounting device and an electronic component mounting method in which an electronic component fed by a tape feeder is picked up by a mounting head to mount the electronic component on a board.

BACKGROUND ART

An electronic component mounting device includes a board conveying path which conveys and positions a board on which electronic component is to be mounted, a tape feeder which carries out a feeding operation of a tape storing electronic components to supply the electronic components; and a mounting head which picks up the electronic component supplied by the tape feeder and mounts the electronic component on the board positioned by the board conveying path. The tape feeder feeds the detachably attached tape pitch by pitch and supplies the electronic component stored in the tape to a component pickup port one by one. The mounting head picks up the electronic components supplied by the tape feeder and mounts the electronic component on the board positioned by the board conveying path. From the viewpoint that a quality control of the electronic component to be mounted on the board can be carried out for each tape, the electronic components having the same electrical characteristics are stored in the same tape.

When the feeding operation of the tape progresses and a rear end of the tape reaches the component pickup port, the tape attached to the tape feeder falls within a state of running out of the component and waiting for an exchange of the tape. A tape splicing technique is known for the purpose of eliminating a loss of time due to such a waiting for an exchange of a tape. In the tape splicing, a new tape is connected (spliced) to a rear end portion of a tape which is being attached to a tape feeder and supplying electronic component before the tape feeder runs out of the component, whereby the tape feeder can continuously supply the electronic component over a plurality of tapes (for example, Patent Document 1).

RELATED ART DOCUMENTS

Patent Documents

Patent Document 1: JP-A-2005-116599

SUMMARY OF THE INVENTION

Problem to be Solved by the Invention

However, when the tape splicing is applied, the electrical characteristics of the electronic component supplied from the tapes are different before and after connected positions of the tapes. When a plurality of electronic components which stride over the connected positions of the tapes are supplied and mounted on one board, the electronic components having different electrical characteristics are mixed and mounted on the board. Consequently, the tape splicing is extremely effective for the production of the board in which variation in the electrical characteristics of the electronic components mounted on the board is permitted to some degree. In contrast, the tape splicing may be rather inconvenient for a board such as an illumination panel, e.g., a liquid crystal panel, in which variation in electrical characteristics of mounted electronic components (LED components) may give a great influence to the quality of a product (here, a uniformity of illumination distribution) so that the quality of an entire board may be deteriorated.

An object of the present invention is to provide an electronic component mounting device and an electronic component mounting method in which even when the tape splicing is applied to the tape of the tape feeder, the electronic components having the same electrical characteristics can be mounted to one board.

Means for Solving the Problem

An aspect of the present invention provides an electronic component mounting device including: a board conveying path which conveys and positions a board for mounting an electronic component thereon; a tape feeder which feeds pitch by pitch a tape storing the electronic components to be mounted on the board so as to supply one by one the electronic components to a component pickup port; a mounting head which picks up the electronic component supplied by the tape feeder to mount the electronic component on the board positioned by the board conveying path; a tape passage serving as a passage of the tape fed pitch by pitch by the tape feeder; connected position detecting means which detects that a connected position where a new tape is connected to the tape provided in the tape feeder reaches a predetermined position in the tape passage; and head-feeding control means which performs head-feeding of an electronic component provided in a head of the connected new tape, in which the tape feeder feeds the tape such that the electronic component in the head of the new tape is located in the component pickup port, when the connected position detecting means detects that the connected position of the tape reaches the predetermined position in the tape passage, wherein when the connected position detecting means detects that the connected position of the tape reaches the predetermined position in the tape passage, the mounting head picks up the electronic component from the new tape fed by the head feeding control means and is mounted on a new board positioned by the board conveying path.

Another aspect of the invention provides an electronic component mounting method by an electronic component mounting device that includes: a board conveying path which conveys and positions a board for mounting an electronic component thereon; a tape feeder which feeds pitch by pitch a tape which stores the electronic component is to be mounted on the board so as to supply one by one the electronic components to a component pickup port; a mounting head which picks up the electronic component supplied by the tape feeder to mount the electronic component on the board positioned by the board conveying path; a tape passage serving as a passage of the tape fed pitch by pitch by the tape feeder; and connected position detecting means which detects that a connected position where a new tape is connected to the tape provided in the tape feeder reaches a predetermined position in the tape passage, said electronic component mounting method including: a step of performing head-feeding of an electronic component provided in a head of the connected new tape, in which the tape feeder feeds the tape such that the electronic component in the head of the new tape is located in the component pickup port, when the connected position detecting means detects that the connected position of the tape reaches the predetermined position in the tape passage; and a step of picking up the electronic component by the mounting head from the new tape fed by the head feeding control means and mounting the

electronic component on a new board positioned by the board conveying path when the connected position detecting means detects that the connected position of the tape reaches the predetermined position in the tape passage.

Advantages of the Invention

In the present invention, when it is detected that the connected position of the tape reaches the predetermined position in the tape passage, the head-feeding process of the electronic component is performed to locate the electronic component in the head of the new connected tape in the component pickup port, and the mounting head picks up the electronic component from the new tape to which the head-feeding process has been performed and mounts the electronic component on the new board. Accordingly, even when a tape splicing is applied to the tape of the tape feeder, the electronic components having the same electrical characteristics can be mounted on the one board. Thus, it is possible to avoid a deterioration of quality of an entire board caused by mounting the electronic components having different electrical characteristics on the one board.

BRIEF DESCRIPTION OF THE DRAWINGS

FIG. **1** is a perspective view of an electronic component mounting device according to an exemplary embodiment of the present invention.

FIGS. **2**(*a*) and **2**(*b*) are plan views of a multi-board substrate which holds a plurality of unit boards to which LED components are mounted by the electronic component mounting device according to the exemplary embodiment of the present invention.

FIG. **3** is a block diagram showing a control system of the electronic component mounting device according to the exemplary embodiment of the present invention.

FIGS. **4**(*a*) and **4**(*b*) are diagrams showing a procedure of a tape splicing process of a tape attached to a tape feeder provided in the electronic component mounting device according to the exemplary embodiment of the present invention.

FIGS. **5**(*a*) and **5**(*b*) are diagrams showing a connected position detecting sensor, and in the vicinity thereof, provided in the electronic component mounting device according to the exemplary embodiment of the present invention.

FIG. **6** is a flowchart showing a procedure of component mounting processes carried out by the electronic component mounting device according to the exemplary embodiment of the present invention.

MODE FOR CARRYING OUT THE INVENTION

With reference to the drawings, an exemplary embodiment of the present invention will be described below. In FIG. **1**, an electronic component mounting device **1** mounts LED components **4** serving as electronic components on a plurality of unit boards (hereinafter simply referred to as boards) **3**, respectively, for manufacturing illumination boards held on a multi-board substrate **2** delivered from other device provided on an upstream side not shown and discharges the multi-board substrate **2** to other device provided on a downstream side not shown. The electronic component mounting device **1** is connected to other devices such as a screen printing device, an inspecting device or a re-flow furnace which are not shown to form a component mounting line for manufacturing mounting boards. For the convenience of a following explanation, a conveying direction of the multi-board substrate **2** in the electronic component mounting device **1** (in FIG. **1**, a direction to which an arrow A is directed) is set to an X-axis direction, a direction along a horizontal plane and perpendicular to the X-axis direction is set to a Y-axis direction, and a vertical direction is set to a Z-axis direction. The Y-axis direction is set to a transverse direction of the electronic component mounting device **1**.

In FIG. **1**, the electronic component mounting device **1** includes: a board conveying path **12** provided on a base **11** to convey and position the multi-board substrate **2** (i.e., the boards **3**) in a direction along a horizontal plane (the X-axis direction); a plurality of tape feeders **13** (three feeders in the exemplary embodiment) provided on one side of the base **11** in the Y-axis direction and arranged in parallel with the X-axis direction, each of which supplies the LED component **4** to be mounted on the boards **3**; and a mounting head **15** which is movable by a head moving mechanism **14** provided on the base **11**, picks up the LED component **4** supplied from the tape feeders **13**, and mounts the LED component **4** on the boards **3** held by the multi-board substrate **2** on the board conveying path **12**.

In FIG. **1**, the board conveying path **12** includes a pair of belt conveyors. The board conveying path **12** conveys (loads) the multi-board substrate **2** delivered from other device on the upstream side (e.g., the screen printing machine) to position the multi-board substrate **2** at an operating position at a center of the base **11** (a position shown in FIG. **1**), and conveys (unloads) the multi-board substrate **2** to which the LED component **4** is mounted by the mounting head **15** to discharge the multi-board substrate **2** to other device provided on the downstream side (e.g., the inspecting device).

In FIG. **1**, each of the tape feeders **13** includes a detachable tape T which stores many LED components **4** having the same electrical characteristics arranged in one row. The tape feeder **13** feeds the tape T in a predetermined direction (here, in the Y-axis direction directed toward the board conveying path **12** side) pitch by pitch to continuously supply the LED components **4** one by one to components pickup ports **13***p* provided in an end portion of a center side of the base **11** (the board conveying path **12** side).

In FIG. **1**, the head moving mechanism **14** includes one pair of gate type frames **14***a* provided so as to stride over the board conveying path **12** and extend in the Y-axis direction; a beam shaped X-axis table **14***b* having both ends supported on the pair of gate type frames **14***a* and provided movable in the Y-axis direction; and a plate shaped moving stage **14***c* provided movable in the X-axis direction on the X-axis table **14***b*. The mounting head **15** is attached to the moving stage **14***c*. The mounting head **15** includes a plurality of suction nozzles **15**N extending downward such that the suction nozzles can be lifted and lowered and can rotate about the vertical axis (the Z-axis).

As shown in FIG. **1**, in the mounting head **15**, a board camera **16** having an imaging field of view directed downward is provided. In an area between the board conveying path **12** on the base **11** and the tape feeders **13**, a component camera **17** having an imaging field of view directed upward is provided.

As shown in FIGS. **2**(*a*) and **2**(*b*), each of the boards **3** has an elongated form extending in the conveying direction (the X-axis direction) of the multi-board substrate **2** conveyed by the board conveying path **12**. A plurality of boards **3** (fifteen sheets in the exemplary embodiment) are arranged in the direction of width of the multi-board substrate **2** (the Y-axis direction) and held on the multi-board substrate **2**.

As shown in FIG. **2**(*a*), in each of the boards **3**, a plurality of LED component mounting portions BS are arranged in the conveying direction (the X-axis direction) of the board **2**. The

LED component mounting portions BS are provided for arranging and mounting thereon the LED components **4** of the same kind (the same color) in one row in the conveying direction of the multi-board substrate **2** (the X-axis direction). FIG. **2**(*a*) shows the multi-board substrate **2** before the LED components **4** are mounted on the LED component mounting portions BS provided on each of the boards **3**. FIG. **2**(*b*) shows the multi-board substrate **2** after the LED components **4** are mounted on the LED component mounting portions BS provided on each of the boards **3**.

An operation execution control unit **20***a* (FIG. **3**) of a controller **20** (FIG. **1** and FIG. **3**) is provided in the electronic component mounting device **1**. The operation execution control unit **20***a* controls an operation of a board conveying path driving unit **21** (FIG. **3**) including an actuator not shown, thereby performing a conveying and positioning operation of the boards **3** (directly, the multi-board substrate **2**) by the board conveying path **12**. The operation execution control unit **20***a* of the controller **20** controls an operation of a tape feeder driving unit **22** (FIG. **3**) including an actuator not shown, thereby performing a feeding operation (a pitch by pitch feeding operation of the tape T) of the LED component **4** to the component pickup port **13***p* by each of the tape feeders **13**.

The operation execution control unit **20***a* of the controller **20** controls an operation of a head moving mechanism driving unit **23** (FIG. **3**) (by controlling a movement of the X-axis table **14***b* in the Y-axis direction relative to the pair of gate type frames **14***a* and controlling a movement of the moving stage **14***c* in the X-axis direction relative to the X-axis stage **14***b*), thereby performing a moving operation of the mounting head **15** in the direction along the horizontal plane by the head moving mechanism **14**. The operation execution control unit **20***a* of the controller **20** controls an operation of a nozzle driving unit **24** (FIG. **3**) including an actuator not shown, thereby performing a lifting and lowering operation and a rotating operation of the suction nozzles **15**N on the vertical axis relative to the mounting head **15**.

The operation execution control unit **20***a* of the controller **20** controls an operation of a vacuum pressure supply unit **25** (FIG. **3**) so as to supply a vacuum pressure to the suction nozzles **15**N and release the supply of the vacuum pressure to the suction nozzles **15**N, thereby performing a sucking and detaching operation of the LED component **4** by each of the suction nozzle **15**N.

The operation execution control unit **20***a* of the controller **20** controls operations of the board camera **16** and the component camera **17** (FIG. **3**), thereby performing an imaging operation by the board camera **16** and the component camera **17**. Data of an image obtained by the imaging operations of the board camera **16** and the component camera **17** are fetched and stored in an image data storing unit **20***b* (FIG. **3**), and the image is recognized by an image recognizing unit **20***c* (FIG. **3**) provided in the controller **20**.

When the feeding operation of the tape T by the tape feeder **13** progresses and a rear end portion of the tape T reaches the component pickup port **13***p*, the tape T attached to the tape feeder **13** falls within a state of running out of component. However, when a new tape T is connected (spliced) to the rear end portion of the tape T which is being attached to the tape feeder **13** and supplying the LED component **4** before the tape T runs out of the component as described above, the tape feeder **13** may continuously supply the LED components **4** over a plurality of tapes.

FIGS. **4**(*a*) and **4**(*b*) show an example of a procedure of a tape splicing operation. On an upper surface of the tape T, many recessed portion UB which stores the LED components **4** are arranged and provided in one row along the longitudinal direction of the tape T. On a side of the row (on a side in the direction of width of the tape T), many feeding holes C are similarly arranged and provided in one row along the longitudinal direction of the tape T. The feeding holes C are holes for fitting thereto outer peripheral protrusions of a sprocket (not shown) for feeding pitch by pitch the tape T provided in the tape feeder **13**.

In order to connect the tapes T each other, at first, the rear end portion of the tape T (reference sign: T**1**, in FIGS. **4**(*a*) and **4**(*b*)) which is being attached to the tape feeder **13** and supplying the LED component **4** is butted against a leading end of the tape T (reference sign: T**2**, in FIGS. **4**(*a*) and **4**(*b*)) connected to the tape T. In this state, an upper connecting sheet SH**1** is stuck to the upper surfaces of the tapes T**1** and T**2**, and a lower connecting sheet SH**2** is stuck to lower surfaces of the tapes T**1** and T**2** (FIG. **4**(*a*) to FIG. **4**(*b*)). The upper connecting sheet SH**1** is positioned to dose the feeding holes C, and the lower connecting sheet SH**2** is positioned to dose the feeding holes C.

In FIGS. **5**(*a*) and **5**(*b*), the tape feeder **13** includes a tape lower support portion **13***a* and a tape upper support portion **13***b* which extend in the horizontal direction. The tape lower support portion **13***a* and the tape upper support portion **13***b* are provided to extend in the direction in the horizontal plane. The tape lower support portion **13***a* and the tape upper support portion **13***b* define a tape passage **13***c* as a passage of the tape T. At positions of the tape lower support portion **13***a* and the tape upper support portion **13***b* which vertically oppose each other, one pair of inspection light through holes KH are provided. The feeding holes C of the tape T fed pitch by pitch by the tape feeder **13** pass in the direction in the horizontal plane (the Y-axis direction) between the pair of inspection light through holes KH.

As shown in FIGS. **5**(*a*) and **5**(*b*), a connected position detecting sensor **30** (see also FIG. **1**) is provided at positions to vertically sandwich the pair of inspection light through holes KH in the tape passage **13***c* of the tape feeder **13**. The connected position detecting sensor **30** includes: a projector **30***a* provided below the tape lower support portion **13***a* to project inspection light L upward; and a light receiver **30***b* provided above the tape upper support portion **13***b* to receive the inspection light L projected by the projector **30***a*. When the light receiver **30***b* receives the inspection light L, the light receiver **30***b* outputs a light receiving signal to the controller **20**.

As shown in FIG. **5**(*a*), when a portion except a connected position of the tape T passes between the pair of inspection light through holes KH, the inspection light L projected by the projector **30***a* passes through the feeding holes C of the tape T from a lower side to an upper side for each of feeding operations of one pitches of the tape T by the tape feeder **13**. Accordingly, the light receiver **30***b* intermittently receives the inspection light L at intervals of feeding times of one pitches of the tape T. However, as shown in FIG. **5**(*b*), when the connected position of the tape T reaches the pair of inspection light through holes KH, since the inspection light L projected by the projector **30***a* is blocked by the upper connecting sheet SH**1** which is stuck to close the feeding holes C of the tape T, the light receiver **30***b* does not receive the inspection light L during that time.

When a connected position arrival determining unit **31** (FIG. **3**) of the controller **20** detects that output intervals of the light receiving signals output from the light receiver **30***b* at predetermined intervals up to that time are long despite that the tape T is fed pitch by pitch (when the light receiving signal from the connected position detecting sensor **30** (the light

receiver **30***b*) is not received even when a predetermined time elapses), the connected position arrival determining unit **31** determines that the connected position of the tape T fed pitch by pitch by the tape feeder **13** reaches a predetermined position (a position between the pair of inspection light through holes KH) based on the light receiving signals output from the light receiver **30***b*.

In the present exemplary embodiment, the connected position detecting sensor **30** serves as connected position detecting means which detects that the connected position where the new tape T is connected to the tape T provided in the tape feeder **13** reaches the predetermined position in the tape passage **13***c*.

In FIG. **3**, the controller **20** includes a head-feeding control unit **32**. When the connected position detecting sensor **30** detects the connected position of the tape T, the head-feeding control unit **32** performs a "head-feeding the LED component **4**" by controlling the operation of the tape feeder driving unit **22** to allow the tape feeder **13** to feed the tape T and supply the LED component **4** provided in a head of the newly connected tape T to the component pickup port **13***p*.

A procedure of component mounting process performed by the electronic component mounting device **1** in the present exemplary embodiment will be described below. In this example, only one tape feeder **13** of the three tape feeders **13** is supposed to supply the LED component **4**, and the tape T is supposed to be connected by the new tape T before the tape T runs out of component. Accordingly, when the rear end portion of the tape T which is being attached to the tape feeder **13** and supplying the LED component **4** reaches the predetermined position (the position between the pair of inspection light through holes KH) by the feeding operation of the tape T by the tape feeder **13**, the connected position of the tape T is always detected by the connected position detecting sensor **30**.

The operation execution control unit **20***a* of the controller **20** initially controls the operation of the tape feeder driving unit **22** to allow the tape feeder **13** to feed the tape T pitch by pitch so as to locate the LED component **4** in the head of the tape T which is being attached to the tape feeder **13** in the component pickup port **13***p*, thereby feeding the head LED component (initial head-feeding) (an "initial head-feeding" process in step ST**1** shown in FIG. **6**).

When the operation execution control unit **20***a* of the controller **20** performs the initial head-feeding process of the LED component **4**, the operation execution control unit **20***a* controls the operation of the board conveying path driving unit **21** to convey (load) the multi-board substrate **2** delivered from other device on the upstream side (e.g., the screen printing machine) by the board conveying path **12** and position the multi-board substrate **2** in a predetermined operating position (a "multi-board substrate conveying and positioning" process in step ST**2** shown in FIG. **6**).

When the multi-board substrate **2** is positioned at the predetermined operating position, the operation execution control unit **20***a* of the controller **20** moves the board camera **16** (the mounting head **15**) to a space above the multi-board substrate **2** to obtain an image of a board mark (not shown) provided on the multi-board substrate **2**. Then, the operation execution control unit **20***a* allows the image recognizing unit **20***c* to recognize the obtained image so as to obtain a positional shift or displacement of the multi-board substrate **2** from a normal operating position.

When the operation execution control unit **20***a* of the controller **20** conveys and positions the multi-board substrate **2**, the operation execution control unit **20***a* determines, in the connected position arrival determining unit **31**, whether the connected position of the tape T is detected based on the detected information from the connected position detecting sensor **30** at the last pitch-by-pitch feeding operation of the tape T (a "connected position detection determining" process in step ST**3** shown in FIG. **6**). As a result, when the operation execution control unit **20***a* of the controller **20** determines that the connected position of the tape T is detected by the connected position arrival determining unit **31**, the operation execution control unit allows the tape feeder **13** to feed the tape T to perform a head-feeding process of the LED component **4** in which the LED component **4** in the head of the new connected tape T is located in the component pickup port **13** (a "head-feeding" process in step ST**4** in FIG. **6**).

After the determination of the above-described step ST**3** by the operation execution control unit **20***a* of the controller **20** (when the operation execution control unit **20***a* determines that the connected position of the tape T is detected in the step ST**3**, after the head LED component **4** is fed in the step ST**4** subsequent thereto), the operation execution control unit **20***a* allows the mounting head **15** to pick up the LED component **4** fed to the component pickup port **13***p* (a "pickup" process in step ST**5** shown in FIG. **6**).

After the pickup of the LED component **4**, the operation execution control unit **20***a* moves the mounting head **15** such that the picked up LED component **4** passes above the component camera **17** to obtain an image of the LED component **4** by the component camera **17**. Then, the obtained image is recognized by the image recognizing unit **20***c* to inspect whether there is an abnormality (a deformation or defect) of the LED component **4** and to obtain a positional shift or displacement (a suction shift) of the LED component **4** relative to the suction nozzle **15**N (an "image recognizing" process in step ST**6** shown in FIG. **6**).

After recognition of the image of the LED component **4** picked up by the mounting head **15**, the operation execution control unit **20***a* allows the mounting head **15** to move above the board **3** for mounting the LED component **4**. Then, the operation execution control unit **20***a* allows the picked up LED component **4** to contact the LED component mounting portion BS on the board **3** (in the LED component mounting portion BS, a solder is previously printed by the screen printing machine disposed on the upstream side of the electronic component mounting device **1**), and controls the operation of the vacuum pressure supply unit **25** to release the supply of the vacuum pressure to the suction nozzles **15**N. Thus, the operation execution control unit **20***a* mounts the LED component **4** on the LED component mounting portion BS on the board **3** (a "mounting" process in step ST**7** shown in FIG. **6**).

In the mounting process of the step ST**7**, after the determination that the connected position of the tape T is detected in the step ST**3** and head-feeding of the LED component **4** in the step ST**4** subsequent thereto, the operation execution control unit **20***a* changes a target board **3** to which the LED component **4** is mounted such that the target board **3** is not the board **3** to which the LED component **4** has been mounted up to that time, but to a different new board **3**, and mounts the LED component **4** on the changed new board **3**.

In the multi-board substrate **2** (the multi-board substrate **2** being positioned by the board conveying path **12**) holding a board **3** on which the LED component **4** has been mounted up to that time, if a board on which the LED component **4** has not yet been mounted, the "new board **3**" corresponds to the board **3** with no LED component **4** mounted thereon (when there are a plurality of such boards **3**, one of them). If there is no new board **3** in the multi-board substrate **2** holding the boards **3** all on which the LED component **4** is mounted so far, the multi-board substrate **2** being positioned by the board conveying

path **12** is discharged, and the "new board **3**" corresponds to one of a plurality of boards **3** held in the new conveyed and positioned multi-board substrate **2**.

When the LED component **4** is mounted on the LED component mounting portion BS on the board **3**, the operation execution control unit **20***a* of the controller **20** performs a position correction (including a rotation correction) of the suction nozzles **15**N relative to the multi-board substrate **2** (i.e., relative to the board **3**) so as to correct the positional shift of the multi-board substrate **2** obtained at the time of positioning the multi-board substrate **2** in the step ST**2** and the suction shift of the LED component **4** obtained at the time of recognizing the image of the LED component **4** in the step ST**6**.

After one LED component **4** is mounted on the board **3** (on the LED component mounting portion BS), the operation execution control unit **20***a* of the controller **20** controls the operation of the tape feeder driving unit **22** to perform pitch feeding of the tape T so as to supply the next LED component **4** to the component pickup port **13***p* (a "tape pitch-feeding" process in step ST**8** shown in FIG. **6**). Then, the operation execution control unit **20***a* determines whether all LED components **4** to be mounted on the board **3** on which the LED component **4** is being mounted are completely mounted (a "component mounting finish determining" process in step ST**9** shown in FIG. **6**). As a result, when mounting of all the LED components **4** to be mounted to the board **3** on which the LED component **4** is being mounted is not finished, the operation execution control unit **20***a* repeats the processes of the step ST**5** to ST**8**. When mounting of all the LED components **4** to be mounted on the board **3** on which the LED component **4** is being mounted is finished, the operation execution control unit **20***a* determines whether the mounting of the LED components **4** is finished to all the boards **3** of the multi-board substrate **2** on which the LED component **4** is being mounted (a process of a "component mounting finish decision of all boards" in step ST**10** shown in FIG. **6**).

When the mounting of the LED components **4** is determined in the step ST**10** as being not finished for all the boards **3** of the multi-board substrate **2** on which the LED component **4**, the operation execution control unit **20***a* returns to the step ST**3** so as to perform the processes of the step ST**5** to the step ST**7** for the board **3** on which the LED components **4** are not mounted yet. On the other hand, when the mounting of the LED components **4** is determined as being finished for all the boards **3** of the multi-board substrate **2** on which the LED components **4** are being mounted, the operation execution control unit **20***a* operates the board conveying path **12** to discharge the multi-board substrate **2** being positioned by the board conveying path **12** to an outside of the electronic component mounting device **1** (a "multi-board substrate delivering" process in step ST**11** shown in FIG. **6**).

After the finish of the multi-board substrate delivering process in the step ST**11**, the operation execution control unit **20***a* of the controller **20** determines whether there is still a multi-board substrate **2** on which the LED components **4** are to be mounted (a board presence or absence determining process in step ST**12** shown in FIG. **6**). As a result, when there is the multi-board substrate **2** on which the LED components **4** are to be mounted, the operation execution control unit **20***a* of the controller **20** returns to the step ST**2** so as to convey a new multi-board substrate **2**. When there is no multi-board substrate **2** on which the LED components **4** are mounted, the operation execution control unit **20***a* finishes a series of "component mounting" processes.

As described above, the electronic component mounting device **1** in the exemplary embodiment includes: the board conveying path **12** which conveys and positions the board **3** for mounting the LED components **4** thereon; the tape feeder **13** which feeds pitch by pitch the tape T which stores the LED components **4** to be mounted on the board **3** one by one to the component pickup port **13***p*; the mounting head **15** which picks up the LED components **4** supplied from the tape feeder **13** to mount the LED components **4** on the board **3** positioned by the board conveying path **12**; the tape passage **13***c* serving as the passage of the tape T fed pitch by pitch by the tape feeder **13**; the connected position detecting sensor **30** serving as the connected position detecting means which detects that the connected position where the new tape T is connected to the tape T provided in the tape feeder **13** reaches the predetermined position in the tape passage **13***c*; and the head-feeding control means (the head-feeding control unit **32** of the controller **20**) which performs head-feeding of an electronic component provided in a head of the connected new tape T, in which the tape feeder **13** feeds the tape T such that the LED component **4** in the head of the new tape T is located in the component pickup port **13***p*, when the connected position detecting sensor **30** detects that the connected position of the tape T reaches the predetermined position in the tape passage **13***c*. When the connected position detecting sensor **30** detects that the connected position of the tape T reaches the predetermined position in the tape passage **13***c*, the mounting head **15** picks up the LED component **4** from the new tape T fed by the head-feeding control means and mounted on the new board **3** positioned by the board conveying path **12**.

Further, the electronic component mounting method in the exemplary embodiment is an electronic component mounting method by the electronic component mounting device **1** of the exemplary embodiment, and includes: a step of performing head-feeding of the LED component **4** provided in the head of the connected new tape T, in which the tape feeder **13** feeds the tape T such that the LED component **4** in the head of the new tape T is located in the component pickup port **13***p*, when the connected position detecting sensor **30** detects that the connected position of the tape T reaches the predetermined position in the tape passage **13***c* (the head-feeding process in the step ST**4**); and a step of picking up the LED components **4** by the mounting head **15** from the new tape T in which the LED components **4** is head-fed and mounting the LED components **4** on the new board **3** positioned by the board conveying path **12** when the connected position detecting sensor **30** detects that the connected position of the tape T reaches the predetermined position in the tape passage **13***c* (the pickup process in ST**5** to the mounting process in the step ST**7**).

In the electronic component mounting device **1** and the electronic component mounting method according to the exemplary embodiment, when the connected position of the tape T is detected to reach the predetermined position in the tape passage **13***c*, the head-feeding process of the LED components **4** is performed such that the LED component **4** provided in the head of the new connected tape T is located in the component pickup port **13***p*. The mounting head **15** picks up the LED component **4** from the new tape T which has been subject to the head-feeding of the LED component **4**, and mounts the LED component **4** on the new board **3**. Accordingly, even when a tape splicing is applied to the tape T of the tape feeder **13**, the LED components **4** having the same electrical characteristics can be mounted on the one board **3**. Thus, it is possible to avoid a deterioration of quality of an entire board **3** caused by mounting the electronic components **4** having different electrical characteristics on the one board **3**.

In a related art, the mounting head picks up the LED components **4** obtained by striding over the connected posi-

tion of the tapes subjected to tape splicing, and continuously mounts the LED components **4** on the same board. The electronic component mounting device **1** according to the exemplary embodiment is different from the related art in that it is ensured that the LED components **4** having the different electrical characteristics are not mounted on the same board **3** on which all the LED components **4** to be mounted are completely mounted. Consequently, it is not necessary to check the board **3** to which the LED components **4** are completely mounted whether the LED components **4** having the different electrical characteristics are mounted. Thus, such an operation can be omitted.

Although the exemplary embodiment of the present invention is explained as described above, the present invention is not limited to the above-described exemplary embodiment. For example, in the above-described embodiment, the LED component is explained as the electronic component fed by the tape feeder **13**. However, the electronic component fed by the tape feeder **13** is not limited to the LED component, and may be other electronic components.

Further, in the above-described exemplary embodiment, the illumination board is explained as the board (the unit board **3**) as an object on which the electronic component is mounted. However, the board is not limited to the illumination board. Further, in the above-described embodiment, for the board (the unit board **3**) as an object on which the electronic component is mounted, a plurality of boards are held on the multi-board substrate **2**. However, the boards may not be necessarily held on the multi-board substrate **2**.

The present invention is described in detail with reference to the specific exemplary embodiment. However, it is to be understood to a person having ordinary skill in the art that various changes or modifications may be made without departing from the spirit and scope of the present invention.

This application is based on Japanese Patent Application (Application No. 2010-205121) filed on Sep. 14, 2010, and contents of which are incorporated by reference.

Industrial Applicability

Provided are electronic component mounting device and the electronic component mounting method in which even when the tape splicing is applied to the tape of the tape feeder, the electronic components having the same electrical characteristics can be mounted to one board.

DESCRIPTION OF REFERENCE SIGNS

1 Electronic Component Mounting Device
2 Multi-Board Substrate
3 Board
4 LED Component (Electronic Component)
12 Board Conveying Path
13 Tape Feeder
13*c* Tape Passage
13*p* Component Pickup Port
15 Mounting Head
30 Connected Position Detecting Sensor (Connected Position Detecting Means)
32 Head-Feeding Control Unit (Head-Feeding Control Means)
T, T**1**, T**2** Tape

The invention claimed is:

1. An electronic component mounting method by an electronic component mounting device that comprises: a board conveying path which conveys and positions a board for mounting an electronic component thereon; a tape feeder which feeds pitch by pitch a tape which stores the electronic component is to be mounted on the board so as to supply one by one the electronic component to a component pickup port; a mounting head which picks up the electronic component supplied by the tape feeder to mount the electronic component on the board positioned by the board conveying path; a tape passage serving as a passage of the tape fed pitch by pitch by the tape feeder; and a connected position detecting unit which detects that a connected position where a new tape is connected to the tape provided in the tape feeder reaches a predetermined position in the tape passage,

said electronic component mounting method comprising:

performing head-feeding of the electronic component provided in a head of the connected new tape, in which the tape feeder feeds the tape such that the electronic component in the head of the new tape is located in the component pickup port, when the connected position detecting unit detects that the connected position of the tape reaches the predetermined position in the tape passage during mounting of the electronic component on a first board; and

after performing head-feeding of the electronic component, picking up the electronic component by the mounting head from the new tape fed by the head feeding control unit and mounting the electronic component on a second board which is different from the first board and positioned by the board conveying path when the connected position detecting unit detects that the connected position of the tape reaches the predetermined position in the tape passage.

2. An electronic component mounting method by an electronic component mounting device that comprises: a tape feeder which feeds pitch by pitch a tape which stores the electronic component is to be mounted on a board so as to supply one by one the electronic component to a component pickup port; a mounting head which picks up the electronic component supplied by the tape feeder to mount the electronic component on the board; a tape passage serving as a passage of the tape fed pitch by pitch by the tape feeder; and a connected position detecting unit which detects that a connected position where a new tape is connected to the tape provided in the tape feeder reaches a predetermined position in the tape passage,

said electronic component mounting method comprising:

performing head-feeding of the electronic component provided in a head of the connected new tape, in which the tape feeder feeds the tape such that the electronic component in the head of the new tape is located in the component pickup port, when the connected position detecting unit detects that the connected position of the tape reaches the predetermined position in the tape passage during mounting of the electronic component on a first board; and

after performing head-feeding of the electronic component, picking up the electronic component by the mounting head from the new tape fed by the head feeding control unit and mounting the electronic component on a second board which is different from the first board when the connected position detecting unit detects that the connected position of the tape reaches the predetermined position in the tape passage.

* * * * *