US009468217B2

(12) **United States Patent**
Ruhe et al.

(10) **Patent No.: US 9,468,217 B2**
(45) **Date of Patent: Oct. 18, 2016**

(54) **SHEETER WITH THICKNESS CONTROL**

(71) Applicant: **J.C. FORD COMPANY**, La Habra, CA (US)

(72) Inventors: **Scott D. Ruhe**, Yorba Linda, CA (US); **Peter A. Scherz**, La Habra, CA (US)

(73) Assignee: **J.C. Ford Company**, La Habra, CA (US)

(*) Notice: Subject to any disclaimer, the term of this patent is extended or adjusted under 35 U.S.C. 154(b) by 0 days.

(21) Appl. No.: **14/293,894**

(22) Filed: **Jun. 2, 2014**

(65) **Prior Publication Data**

US 2015/0110938 A1 Apr. 23, 2015

Related U.S. Application Data

(63) Continuation of application No. 13/247,932, filed on Sep. 28, 2011, now Pat. No. 8,740,602.

(60) Provisional application No. 61/387,388, filed on Sep. 28, 2010.

(51) **Int. Cl.**

B23Q 17/00	(2006.01)
B29C 43/24	(2006.01)
A21C 1/00	(2006.01)
A21C 3/00	(2006.01)
A21C 3/02	(2006.01)

(52) **U.S. Cl.**

CPC ***A21C 1/006*** (2013.01); ***A21C 3/00*** (2013.01); ***A21C 3/021*** (2013.01); *Y10T 29/49764* (2015.01)

(58) **Field of Classification Search**

CPC A21C 1/006; A21C 3/021
USPC ..... 425/363, 367, 310, 202, 141, 194; 100/155 R, 160, 161, 163 R, 164, 100/168–171

See application file for complete search history.

(56) **References Cited**

U.S. PATENT DOCUMENTS

2,008,036	A	*	7/1935	Pointon	A21C 9/081 53/244
3,404,986	A	*	10/1968	Wimmer	A23L 1/1041 426/386
4,212,609	A	*	7/1980	Fay	A21C 9/04 425/100
4,757,425	A	*	7/1988	Waltz	G03B 15/06 362/18
4,770,619	A		9/1988	Rijkaart	
5,112,208	A	*	5/1992	Voth	A21C 3/02 264/175
5,180,593	A		1/1993	Mistretta et al.	
5,411,390	A	*	5/1995	Fay	A23G 3/0289 425/145
5,470,599	A	*	11/1995	Ruhe	426/231
5,580,583	A		12/1996	Caridis et al.	
5,720,990	A		2/1998	Lawrence et al.	
5,918,533	A		7/1999	Lawrence et al.	
6,024,554	A		2/2000	Lawrence	

(Continued)

Primary Examiner — Nahida Sultana

(74) *Attorney, Agent, or Firm* — Knobbe, Martens, Olson & Bear, LLP

(57) **ABSTRACT**

A thickness control system for a high speed tortilla sheeting machine can adjust a pinch point gap between a pair of sheeting rollers to maintain a generally uniform thickness of the produced "masa" (i.e., corn dough) sheet. The sheeting machine can include a pinch point gap adjustment device which guides at least one of the rollers through an arcuate path to thereby adjust a magnitude of the pinch point gap. The controller can direct one or more actuators to change the position of the roller along the archive path to thereby change the distance between the two sheeting rollers as desired to produce a masa sheet at the desired preset thickness.

8 Claims, 13 Drawing Sheets

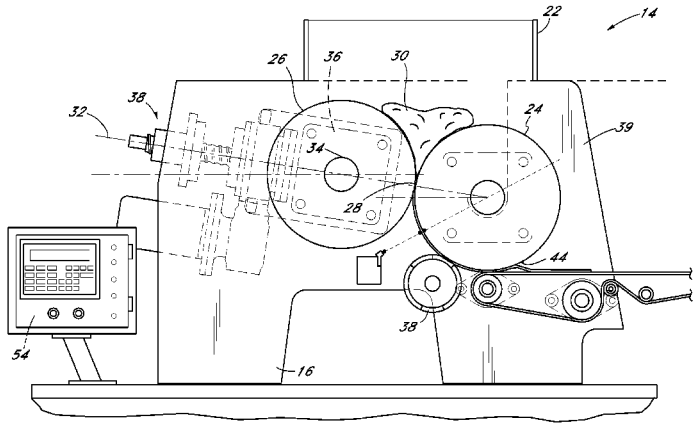

(56) **References Cited**

U.S. PATENT DOCUMENTS

6,336,804	B1 *	1/2002	Wilson	425/367
7,887,314	B2	2/2011	Ruhe et al.	
8,152,509	B2	4/2012	Hanson et al.	
8,347,480	B2	1/2013	Ruhe et al.	
8,740,602	B2	6/2014	Ruhe et al.	
2003/0185927	A1 *	10/2003	Morikawa et al.	425/363
2003/0228388	A1 *	12/2003	Hayashi et al.	425/363
2004/0091563	A1 *	5/2004	Saito et al.	425/363
2004/0188874	A1 *	9/2004	Hikita et al.	264/1.34
2005/0170031	A1 *	8/2005	Lambauer	A21C 3/04 425/363
2006/0033237	A1 *	2/2006	Graham et al.	264/280
2008/0135582	A1 *	6/2008	Schmidt	A21C 11/16 222/272
2013/0266707	A1 *	10/2013	Fackelmann	A21C 5/003 426/502

* cited by examiner

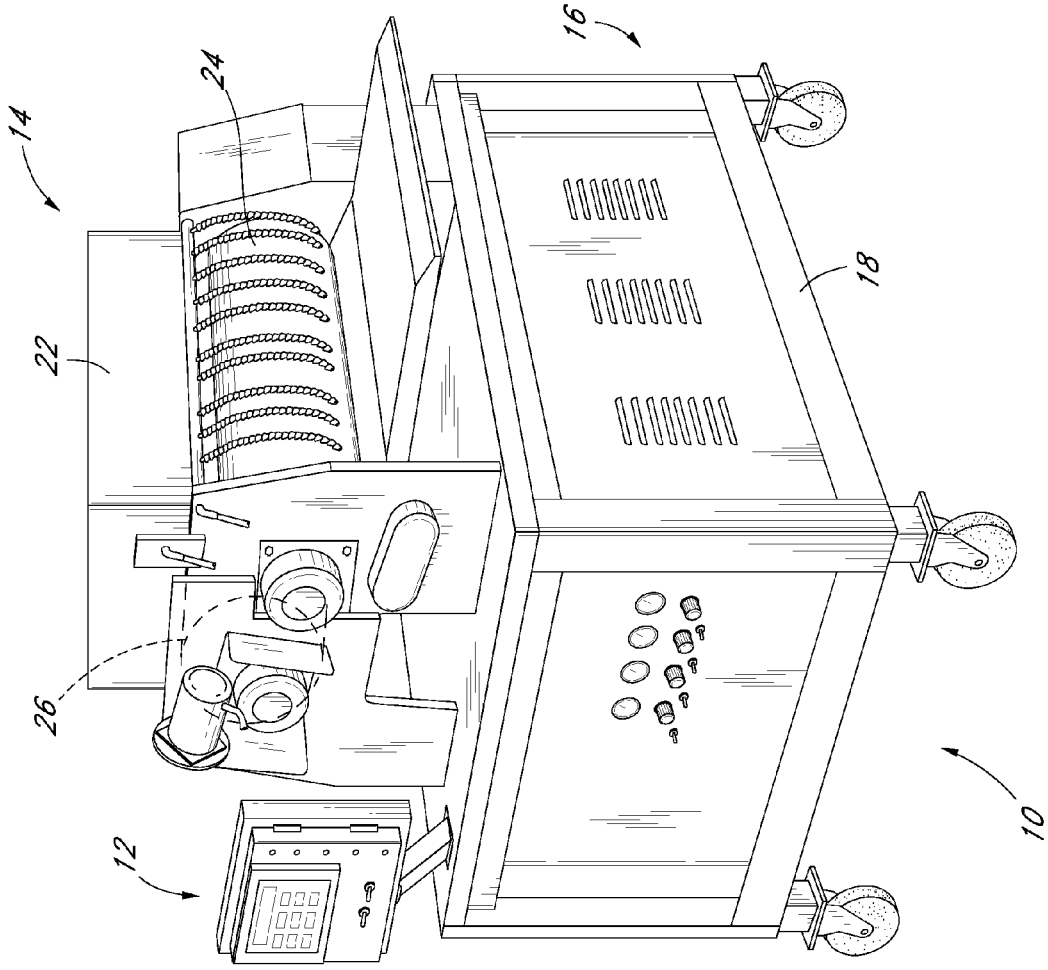

FIG. 1

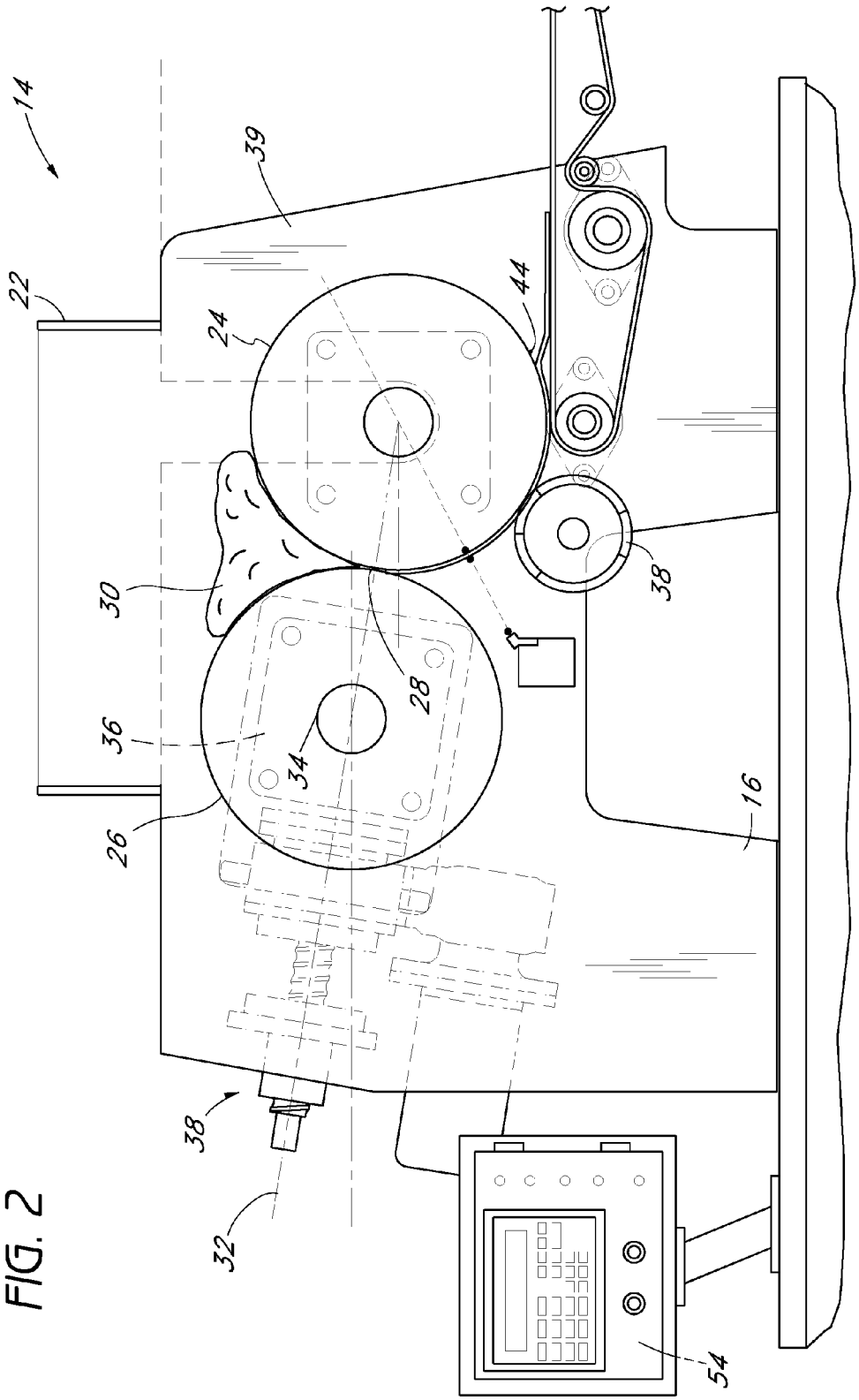

FIG. 2

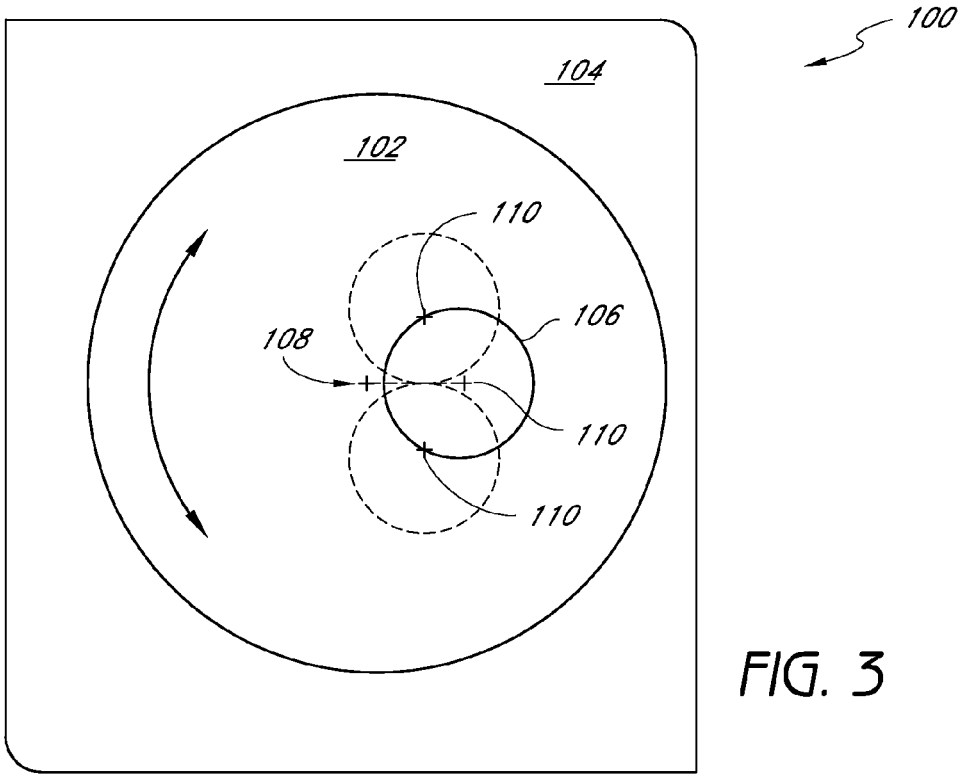
100
104
102
110
106
108
110
110

FIG. 3

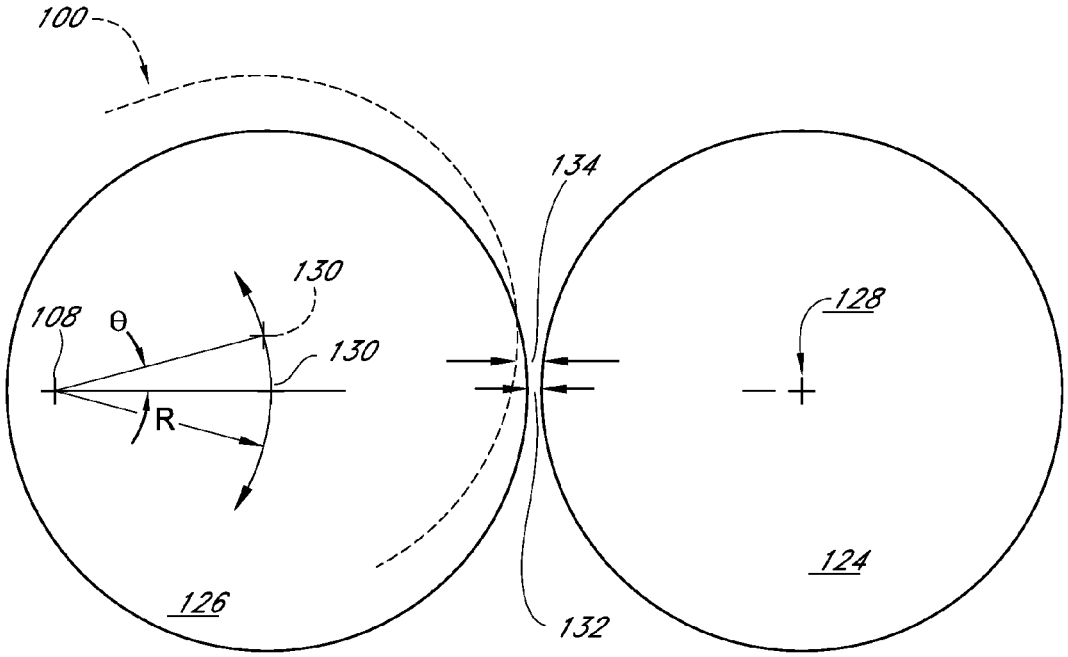
100
134
130
108
θ
130
128
R
124
126
132

FIG. 4

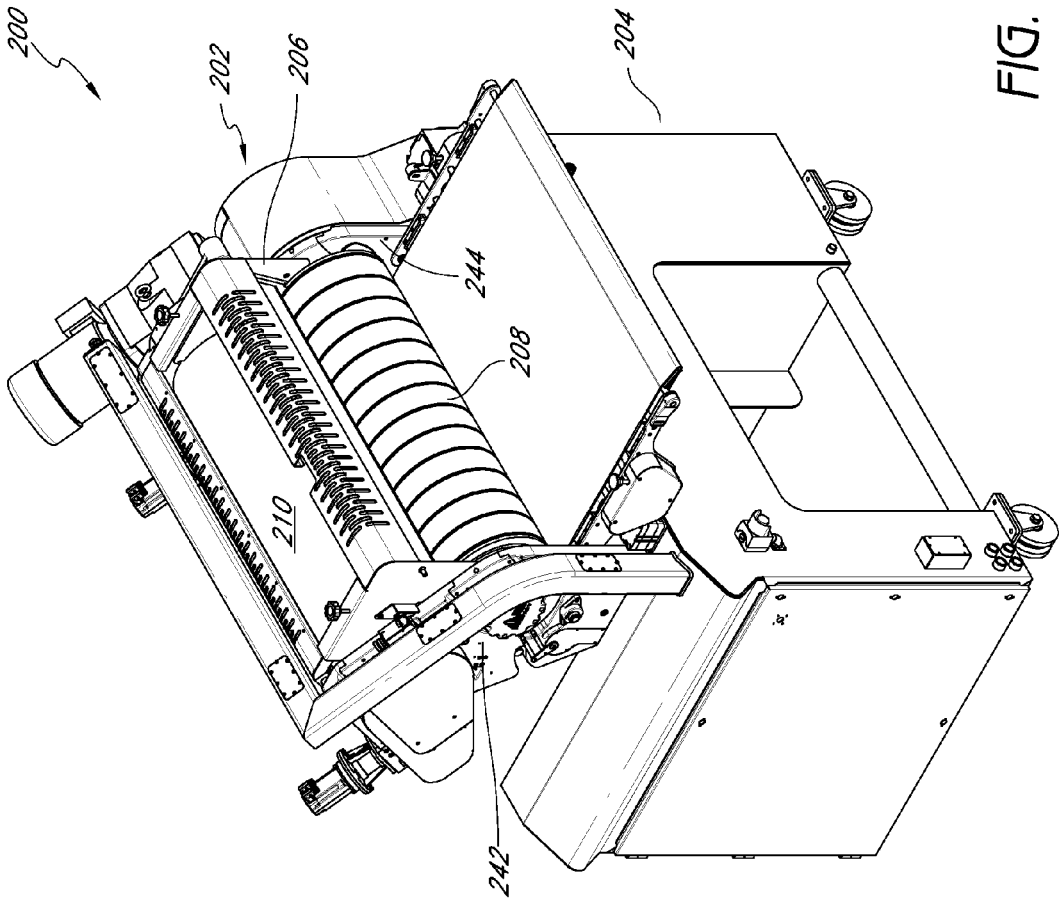

FIG. 5

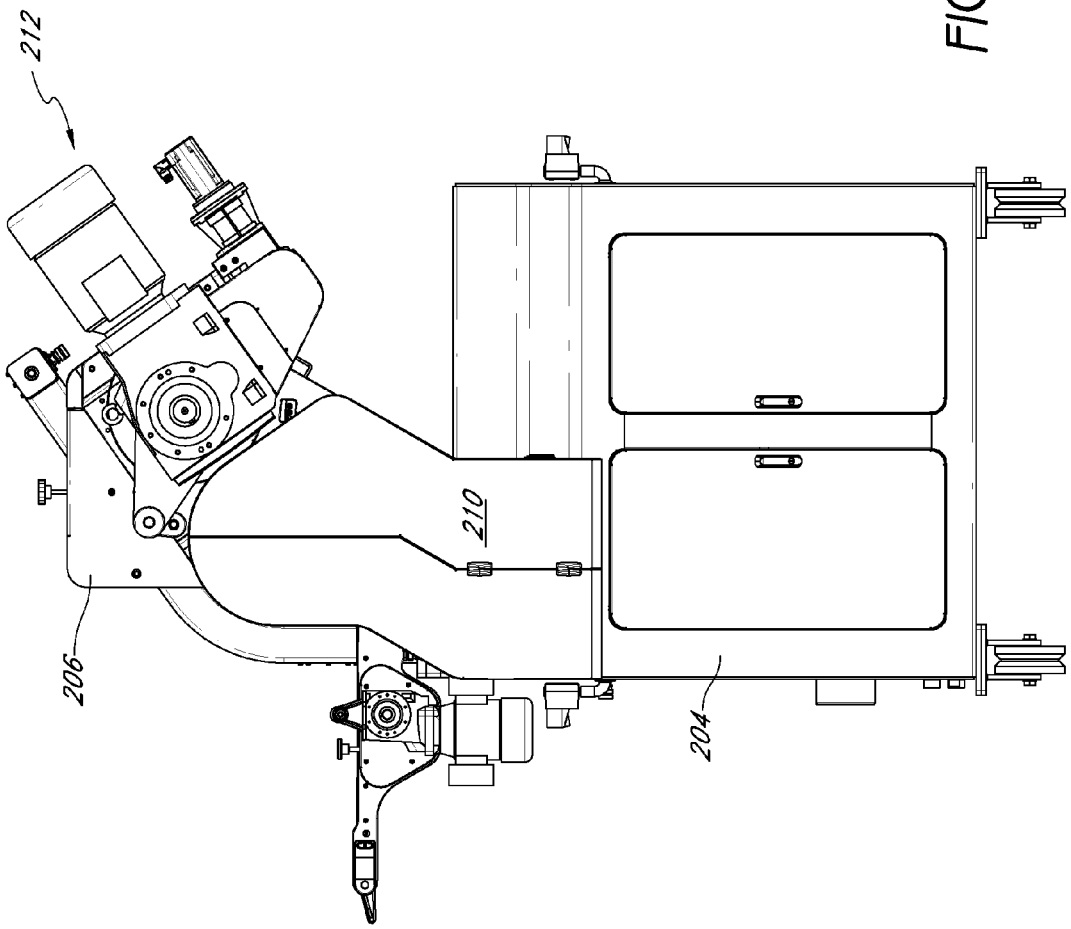

FIG. 6

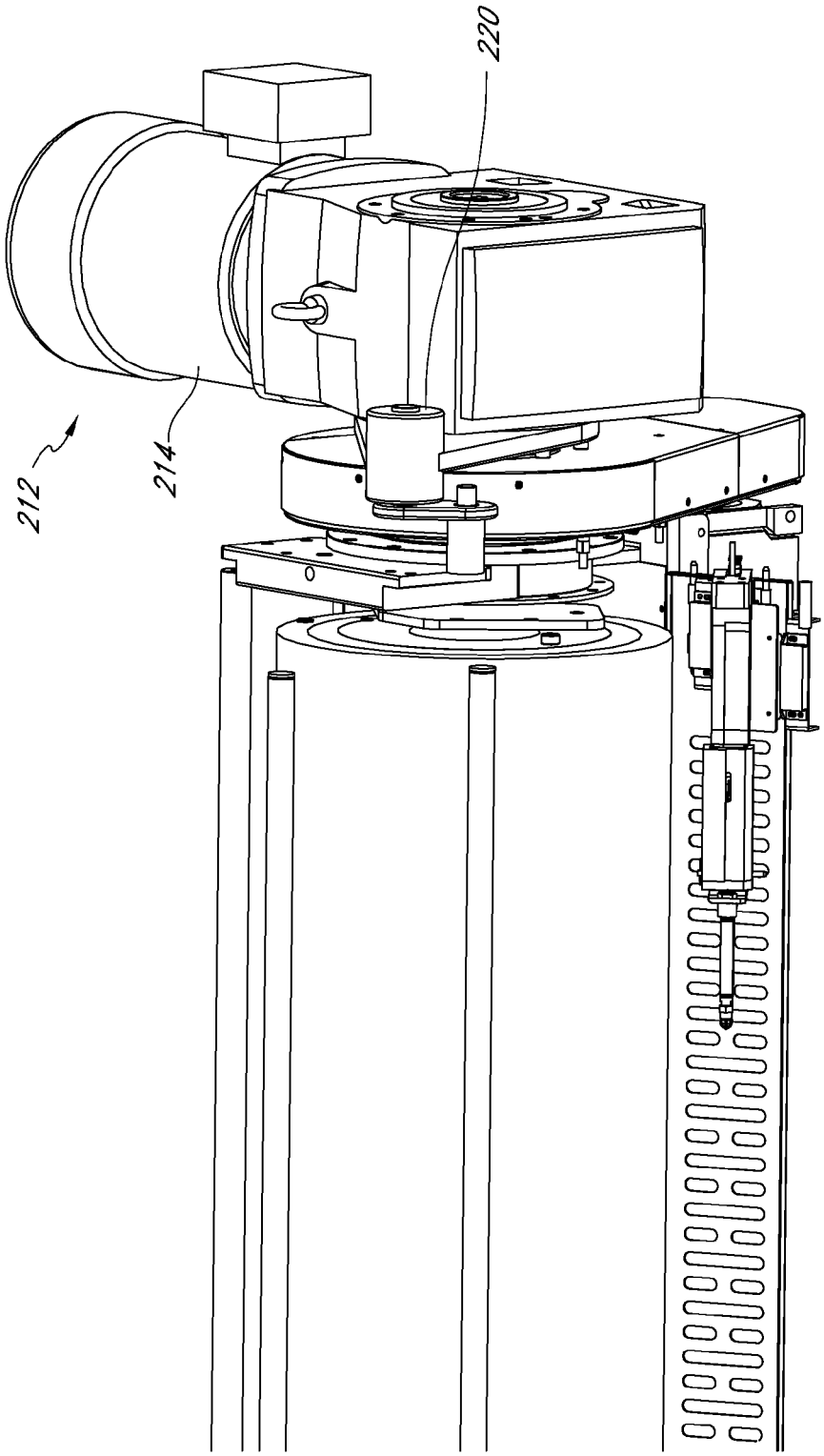

FIG. 7

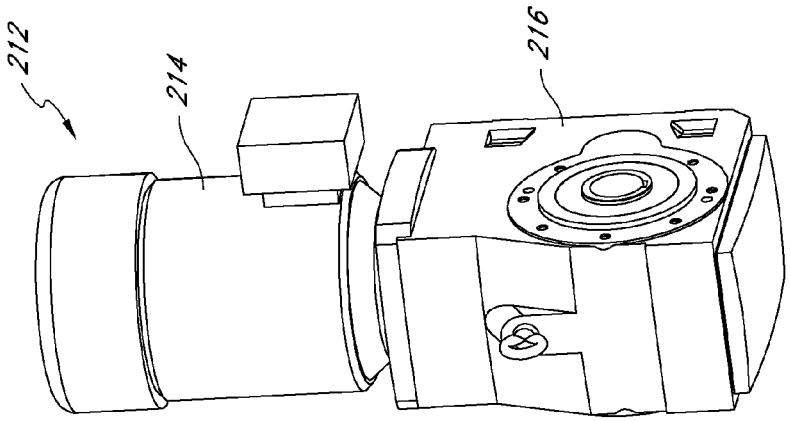

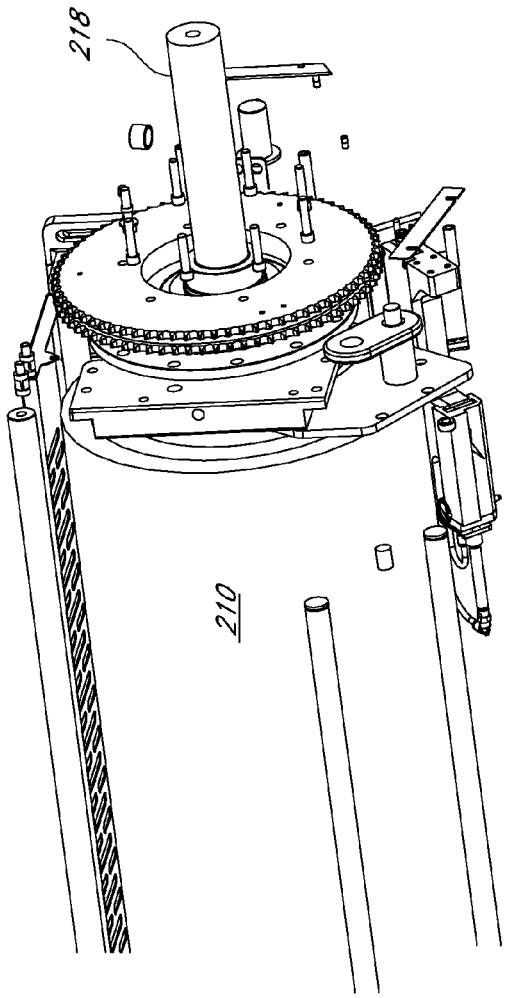

FIG. 8

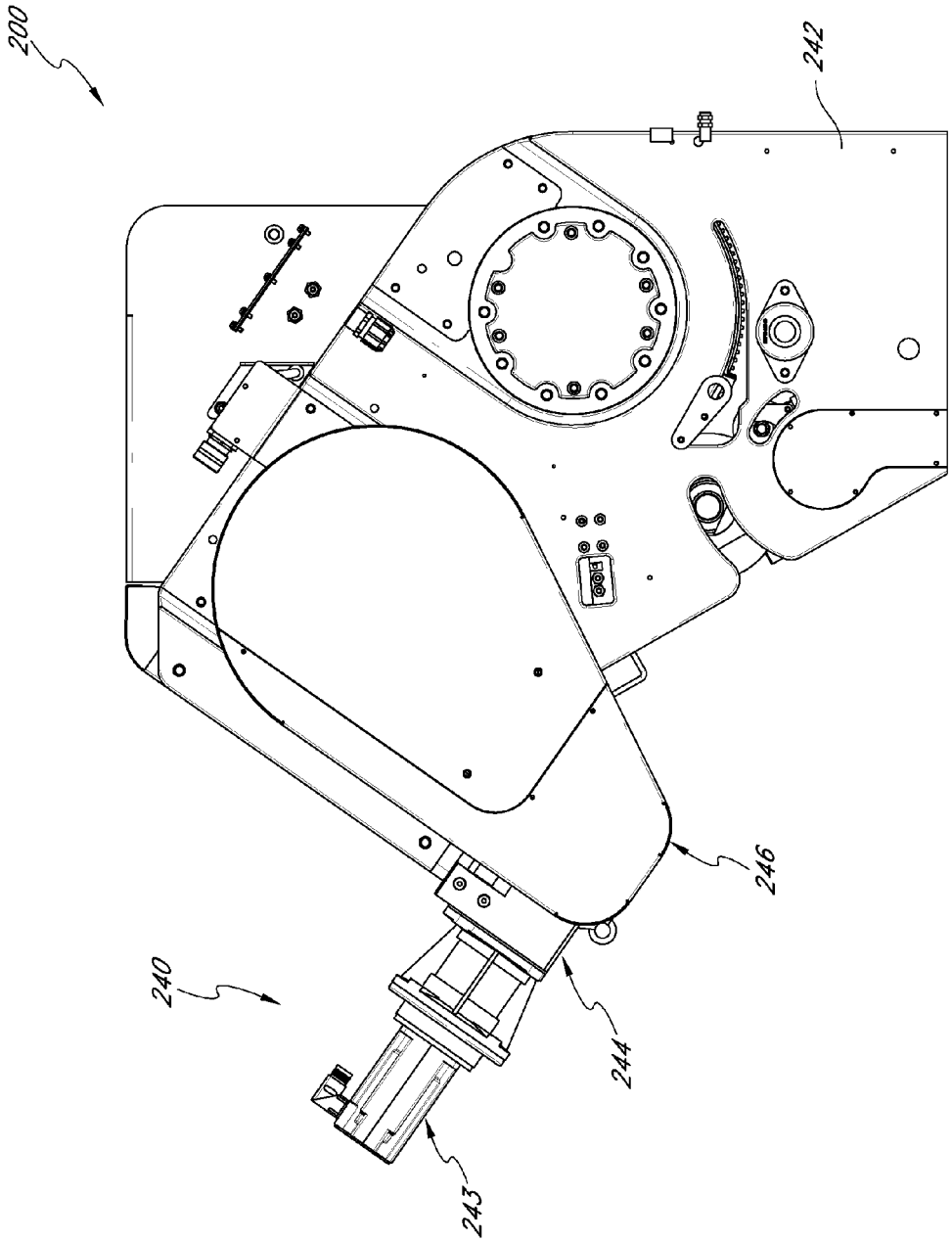

FIG. 9

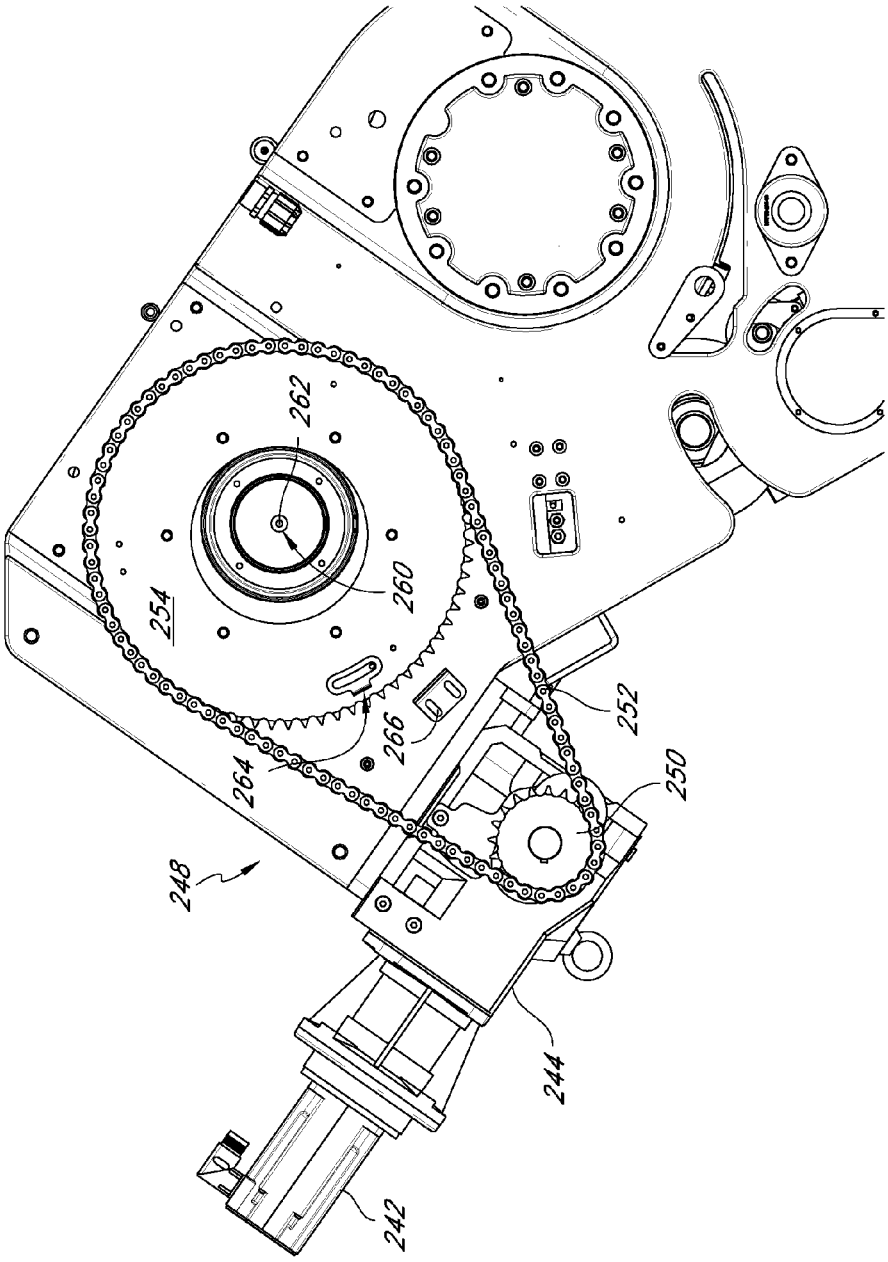

FIG. 10

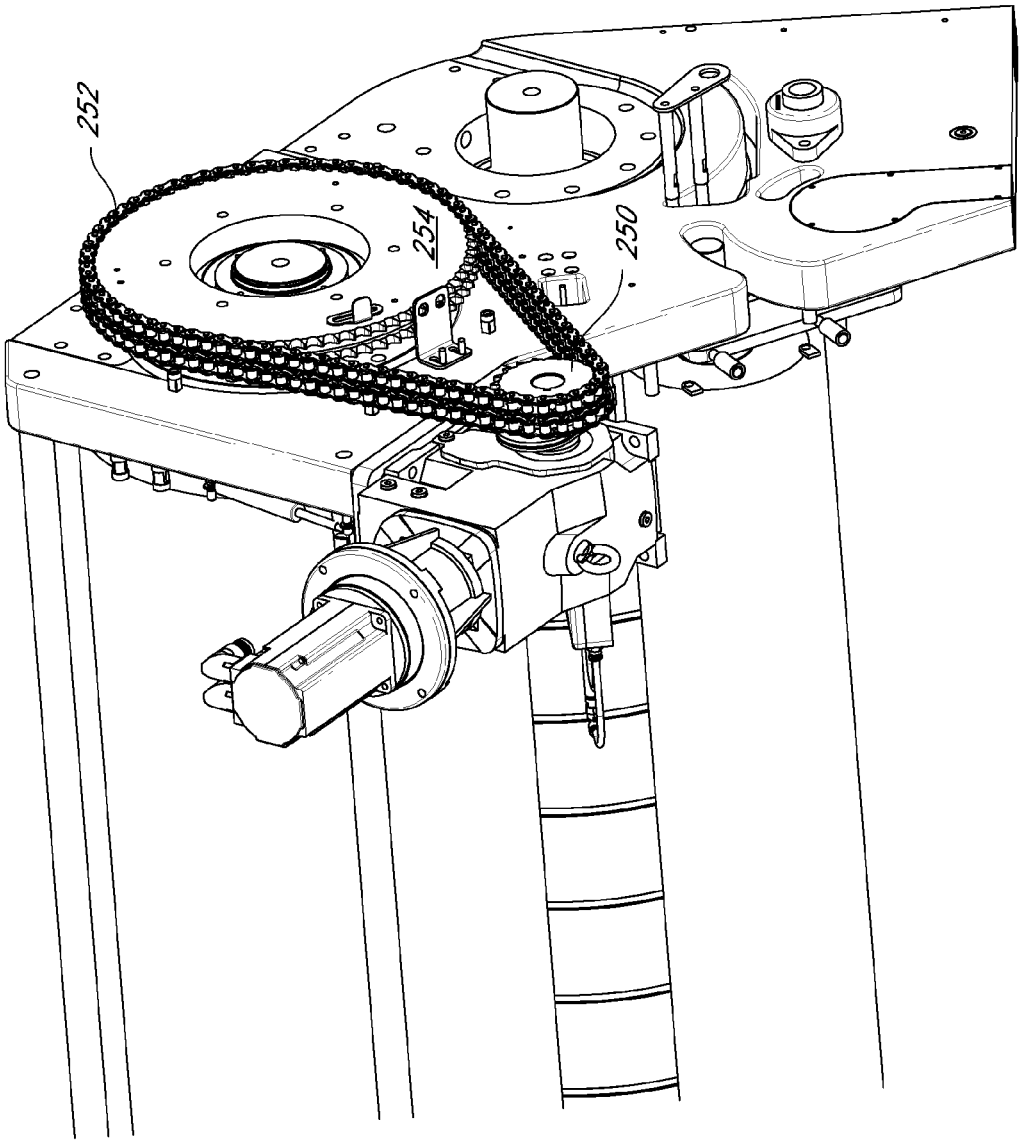

FIG. 11

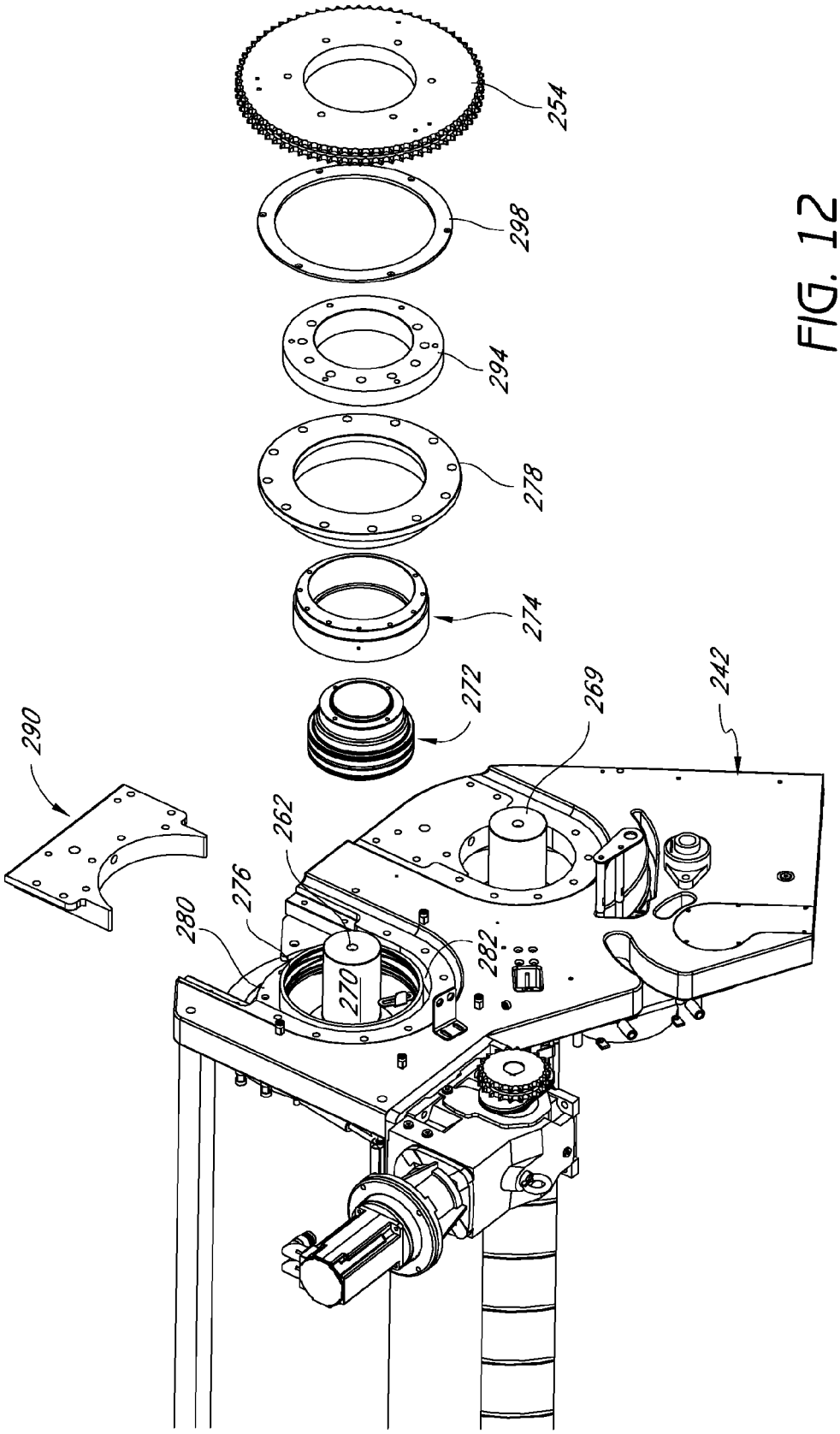

FIG. 12

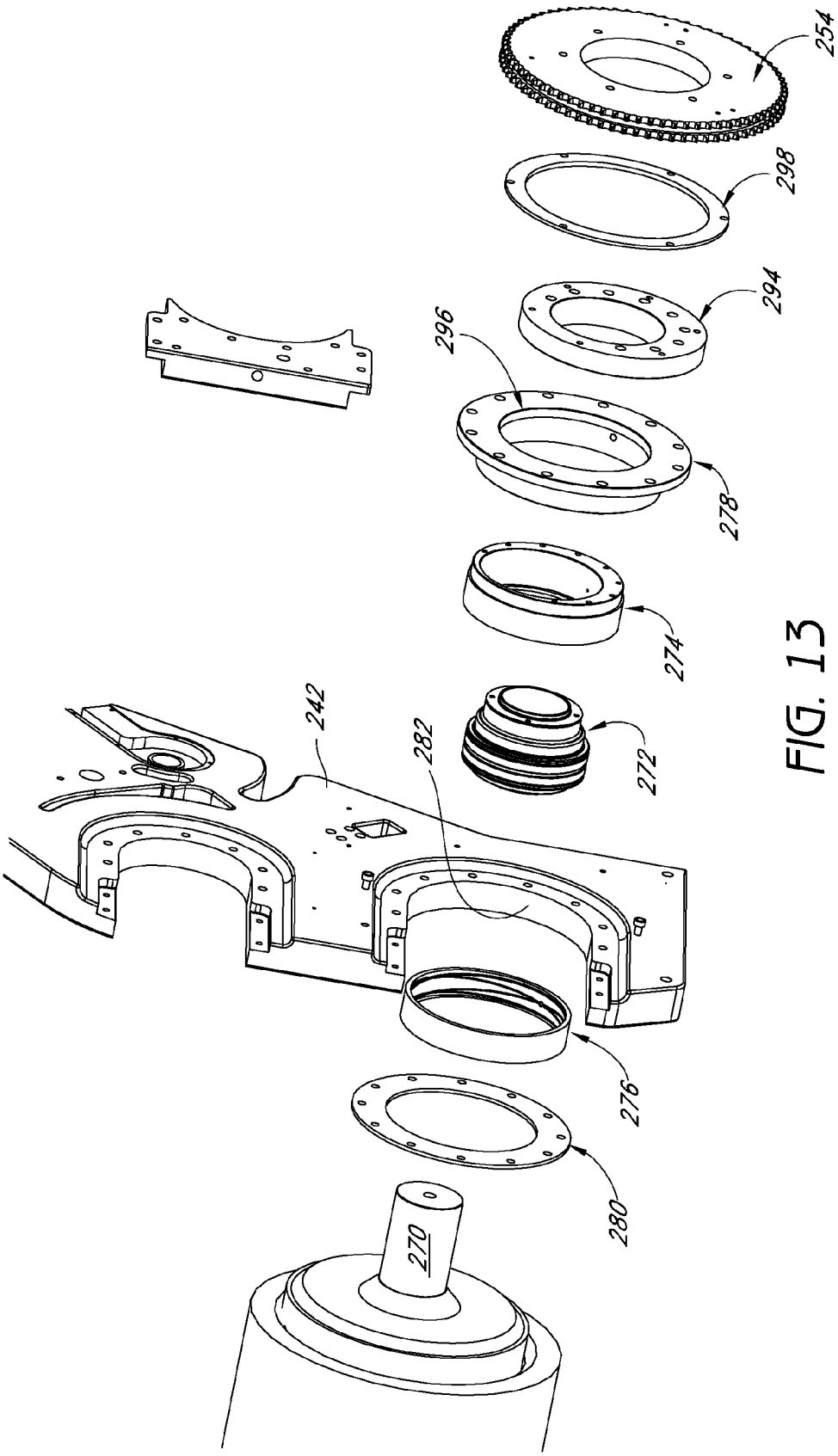

FIG. 13

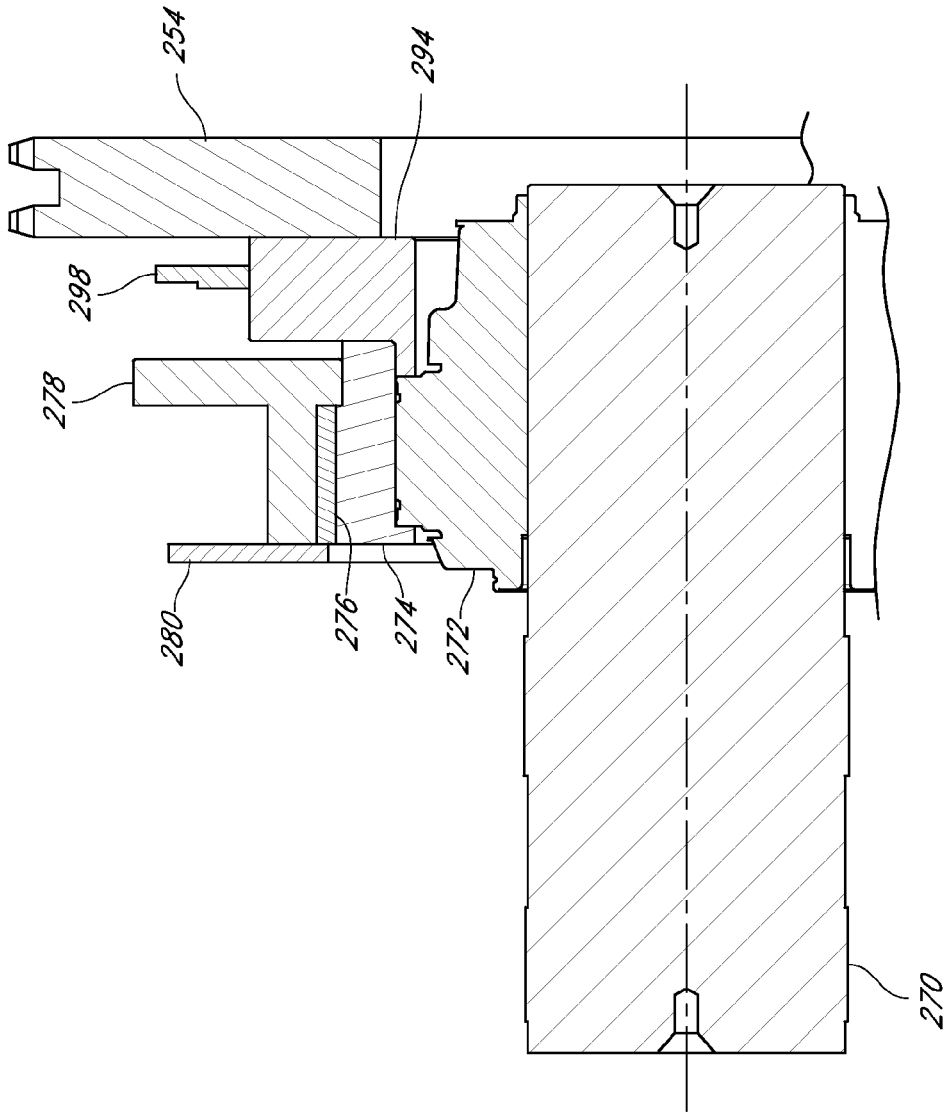

FIG. 14

SHEETER WITH THICKNESS CONTROL

PRIORITY INFORMATION

The present application is a continuation application of U.S. patent application Ser. No. 13/247,932, which is now a U.S. Pat. No. 8,740,602, filed Sep. 28, 2011, which claims priority under 35 U.S.C. §120 to U.S. Provisional Patent Application No. 61/387,388, filed Sep. 28, 2010, the entire contents of which is hereby incorporated by reference.

BACKGROUND OF THE INVENTIONS

1. Field of the Inventions and

The present inventions relate to improvements in high speed production sheeting devices for comestible products (e.g., tortillas and tortilla chips). More specifically, the present inventions relate to sheeting devices which control the spacing of rollers used to roll a comestible product to a desired thickness.

2. Description of the Related Art

Corn tortillas and tortilla chips are cut from a sheet of corn dough, called "masa," and then baked and/or fried. In mass production, the sheeting and cutting stages are accomplished by a tortilla sheeter.

High production tortilla sheeters feed masa from a hopper between a pair of large, stainless steel rollers which roll the masa into a sheet of substantially uniform thickness. The rollers are spaced apart in production to form a gap, known as a "pinch point gap," through which the masa passes. The masa adheres to the surface of one of the rollers, known as the exit roller, after passing through the pinch point gap. A third roller then cuts the masa into either tortillas or tortilla chips. The third roller, known as the cutting roller, commonly has either circular shaped (for tortillas) or triangular-shaped (for tortilla chips) cutting guides positioned on the cylindrical external surface of the cutting roller. The cut tortillas or chips then are stripped from the exit roller by a wire and/or a blower, or by a similar device.

High production tortilla sheeters automate virtually every step of the sheeting and cutting process. One challenge that remains, however, is to accurately control the thickness of the masa sheet before cutting.

The consistency of corn masa commonly varies over time depending upon humidity, temperatures, granularity, and other known factors, and occasionally will contain hard kernels of corn. If the distance between the sheeting rollers is rigidly fixed, the thickness of the exiting masa sheet will change depending on the masa consistency. The consistency of the masa can also vary within the hopper, and, thus, vary across the length of the sheeting rollers. As a result, the thickness of produced tortillas or chips undesirably varies.

Prior sheeting devices included computer controlled motors driving jack screws to guide one of the rollers along a linear path to thereby control the size of the pinch point gap. For example, FIGS. **1** and **2** illustrate such a known sheeting device.

With reference to FIG. **1**, the known sheeting device **10** includes a roller component **14** and a drive component **16**. A lower housing **18** houses the drive component **16**. The drive component **16** includes a conventional electric motor (not shown) which drives the roller component **14** via a series of common gears and chains or belts (not shown), as known in the art. A conventional pneumatic control system controls the pneumatic devices of the sheeting device **10** (e.g., a stripping wire **44** and a cutting roller **38**).

The roller component **14** rests on, or is attached to, the top of the lower housing **18** and includes a hopper **22** positioned above a pair of counter rotating rollers **24**, **26**. The front roller **24** and the rear roller **26** are generally cylindrical. The rollers can also have a roughened surface (obtained, for example, with sandblasting). The rollers **24**, **26** desirably rotate at the same speed; however, it is understood that the rollers **24**, **26** can rotate at different speeds if required by specific application.

The rollers **24**, **26** are positioned parallel to each other and, as shown in FIG. **2**, define a pinch point **28**, i.e., the point at which the rollers **24**, **26** contact or nearly contact each other. In operation, the rollers **24**, **26** are spaced slightly apart to form a gap between the surfaces of the rollers **24**, **26** at the pinch point **28**.

With continued reference to FIG. **2**, the hopper **22** is positioned above the rollers **24**, **26** so as to contain masa **30** between the rollers **24**, **26**. As noted above, the term "masa" is used to denote a corn dough which is commonly used to form tortillas and tortilla chips. However, this type of sheeting device **10** can be used with other types of comestible products, such as, for example, grain-based doughs or doughy-like food mixtures.

The rear roller can be adjusted relative to the front roller to thereby vary the spacing between the rollers **24**, **26**, i.e., to vary the spacing of the size of the pinch point gap **28**. Thus, as is known in the art, this type of sheeting device **10** includes an electric motor-driven jack screw arrangement **38** which allows the roller **26** to be slid along the axis **32** toward and away from the roller **24**.

More specifically, as shown in FIG. **2**, the rear roller **26** rotates about an axis defined by the axle **34**. A movable bearing plate **36** supports one end of the axle **34** and another bearing plate (not shown) supports the opposite end of the axle **34**. Each of the bearing plates **36** rides in a track (not shown) supported by the frame **39**. A jack screw **38** is connected to each bearing plate **36** to move the corresponding bearing plate within the track.

The axis of the track, which defines the slide axis **32**, is aligned with the longitudinal axes of both rollers **24**, **26** and through the pinch point **28**. Thus, movement of the bearing plates **36** within their tracks moves the rear roller **26** relative to the front roller **28** to vary the size of the pinch point gap **28**.

This type of sheeting device **10** also includes a controller **54** which, through the use of various sensors, controls the jack screw drive to maintain the desired thickness of the masa **42** exiting the sheeting device **10**.

SUMMARY OF THE INVENTIONS

An aspect of at least one of the embodiments disclosed herein includes the realization that the type of sheeting device described above with reference to FIGS. **1** and **2** can suffer from excessive movements of the various components forming the jack screw drive assembly. For example, elastic deformations of the screw itself, due to its length, can cause significant displacements of the roller as the forces produced by the masa changes. Additionally, the other bearings and joints requiring lubrication clearances can also contribute to unintended movements of the rollers during operation. These movements can be as great as $2/10{,}000^{ths}$ of an inch (0.0002 inches) every 20 seconds, or more. Although the system described above is actively controlled to adjust the thickness in response to these changes, the adjustments do not eliminate waste or unacceptable product discharged from the sheeter. Rather, even with the computer controlled

thickness adjustment system included in the above-described sheeter **10** (as described in U.S. Pat. No. 5,470,599) there is a continuous stream of unacceptable product discharge from the sheeter due to unintended movement of the rear roller **26**.

An aspect of at least one of the embodiments disclosed herein includes the realization that an eccentric pinch point adjustment system can eliminate several of the mechanical joints necessary for a jack screw drive and thereby reduce unintended movements of a roller of a sheeting device.

Thus, in accordance with at least one embodiment disclosed herein, a rolling device can include a support housing, a first roller having a first outer surface and supported by the first housing to rotate about a first axis, and a second roller having a second outer surface and supported by the housing to rotate about a second axis spaced from the first axis such that juxtaposed portions of the first and second outer surfaces define a pinch point gap. The roller device can also include at least a first pinch point gap adjustment mechanism comprising a rotatable roller mounting plate supported by the housing so as to be rotatable about a third axis and a mount supporting the first roller such that the first axis is offset from the third axis, thereby causing the first axis to revolve about the third axis when the roller mounting plate is rotated about the third axis and thereby changing a magnitude of the pinch point gap.

In accordance with another embodiment, a rolling device can comprise a support housing, a first roller having a first outer surface and supported by the first housing to rotate about a first axis, and a second roller having a second outer surface and supported by the housing to rotate about a second axis spaced from the first axis such that juxtaposed portions of the first and second outer surfaces define a pinch point gap. Additionally, the rolling device can include a first pinch point gap adjustment means for revolving the first axis about a third axis spaced from the first axis and changing a magnitude of the pinch point gap.

In accordance with yet another embodiment, a method of adjusting a spacing of two rollers can comprise supporting a first roller so as to rotate about a first axis, supporting a second roller so as to rotate about a second axis spaced from the first axis such that juxtaposed portions of outer surfaces of the first and second rollers define a pinch point gap, and revolving the first roller such that the first axis revolves about a third axis spaced from the first and second axes thereby changing a magnitude of the pinch point gap.

BRIEF DESCRIPTION OF THE DRAWINGS

The above-mentioned and other features of the inventions disclosed herein are described below with reference to the following drawings. The illustrated embodiments of the sheeter are intended to illustrate, but not to limit, the inventions.

FIG. **1** is a top, front, and right side perspective view of a prior art sheeting device;

FIG. **2** is an enlarged and partial right side elevational view of the prior art sheeting device of FIG. **1**;

FIG. **3** is a schematic representation of an eccentric adjustment device which can be used with any of the embodiments disclosed herein;

FIG. **4** is a schematic diagram of two rollers of a sheeting device in which one of the rollers is adjustable with the eccentric adjustment device of FIG. **3**.

FIG. **5** is a top, front, and right side perspective view of a sheeting device in accordance with an embodiment;

FIG. **6** is a left side elevational view of the sheeting device of FIG. **5**;

FIG. **7** is an enlarged, front, top, and left side perspective view of a roller drive of the sheeter illustrated in FIG. **6**;

FIG. **8** is a bottom, front, left side perspective, exploded view of the roller drive of FIG. **7**;

FIG. **9** is an enlarged and partial right side elevational view of the sheeter device of FIG. **5**;

FIG. **10** is a right side elevational view of the sheeter device illustrated in FIG. **9**, with an eccentric drive cover removed;

FIG. **11** is a rear, top, and right side perspective view of the eccentric drive mechanism illustrated in FIG. **10**;

FIG. **12** is an exploded view of some of the components of the eccentric adjustment mechanism illustrated in FIG. **12**;

FIG. **13** is a further exploded view of a portion of the eccentric adjustment mechanism illustrated in FIG. **12**;

FIG. **14** is a sectional view of a portion of the eccentric drive mechanism of FIG. **13**.

DETAILED DESCRIPTION OF THE PREFERRED EMBODIMENT

The inventions disclosed herein have applicability to sheeters used in conjunction with continuously moving conveyor systems. However, an understanding of the inventions disclosed herein is facilitated with the following description of the application of the principles of the present inventions to dough rolling, and in particular, rolling dough into tortillas and tortilla chips. In some embodiments, the inventions disclosed herein can be used in conjunction with sheeters that have a sheet thickness control system, such as that disclosed in U.S. Pat. No. 5,470,599, the entire contests of which is hereby incorporated by reference. In particular, in some embodiments, the eccentric pinch point adjustment devices and the associated methods of operation disclosed herein can be used in place of the jack-screw type thickness adjustment hardware disclosed in U.S. Pat. No. 5,470,599, while using the same control system electronics, including the controllers, sensors, etc. as that disclosed in U.S. Pat. No. 5,470,599, or other similar control systems.

With reference to FIG. **3**, an eccentric mechanism **100** which can be configured to adjust a pinch point gap between rollers, can include a shaft mount **102** rotatably mounted within a frame **104**. The shaft mount **102** can be in the form of a circular and rotatable member having a shaft aperture **106**.

In the illustrated embodiment, the shaft mount **102** is rotatable about its center axis **108** relative to the support frame **104**. In an initial position of the shaft mount **102**, a center **110** of the aperture **106** is in an initial position. However, as the mount **102** is rotated clockwise relative to the frame **104**, the center **110** of the aperture **106** also moves clockwise. Similarly, when the mount **102** is rotated counter-clockwise, the center **110** of the aperture **106** also moves counter-clockwise.

With reference to FIG. **4**, the eccentric adjustment device **100** is illustrated as adjusting a magnitude of a pinch point gap between two rollers of a comestible product sheeter. For example, FIG. **4** schematically illustrates the rollers **124**, **126** of a comestible product sheeter. In the illustrated embodiment, the roller **124** rotates about an axis **128**. The axis **128** can be defined by fixed bearings and an axle (not shown), or it can be mounted so as to be movable. Such bearings can serve as a support configured to allow the roller **124** to rotate about the axis **128**.

The roller **126** can be mounted with bearings and an axle so as to rotate about axis **130**. Additionally, in the illustrated embodiment, the axle of the roller **126** can be mounted to an eccentric adjustment device, such as the eccentric adjustment device **100** illustrated in FIG. **3**.

When the adjustment device **100** is adjusted such that the axles **128** and **130** are closest to each other, the pinch point gap **132** between the rollers **124**, **126** is at its smallest magnitude, i.e., the rollers **124**, **126** are at their closest possible position.

When the mount **102** is rotated counter-clockwise over an angle θ, the axis of rotation **130** of the roller **126** also moves counter-clockwise over an angle θ about axis **108**. In this position, the pinch point gap grows to a larger pinch point gap **134**, based on the radius R and the angle θ. Thus, by controlling the rotation of mount **102**, the size of the pinch point gap **132** can be controlled.

FIG. **5** illustrates an embodiment of a comestible product sheeter **200** including an eccentric pinch point adjustment mechanism. The illustrated comestible product sheeter **200** includes a roller assembly **202** supported above a housing **204**. The housing **204** can house electronics, power connections, components of a control system, etc. In the illustrated embodiment, the housing **204** is wheeled for convenient placement and servicing.

The roller system **202** can include a hopper **206** positioned above a pair of counter-rotating rollers **208**, **210**. The rollers **208**, **210** can be generally cylindrical. In some embodiments, the rollers **208**, **210** have a slightly roughened surface (obtained, for example, by sandblasting). The rollers **208**, **210** can be driven at the same speed; however, the rollers **208**, **210** can also be rotated at different speeds depending on the desired effect and application.

The rollers **208**, **210** are generally positioned parallel to each other so as to define a pinch point therebetween, as described above with reference to FIG. **4**. In some embodiments, the rollers **208**, **210** can be mounted and sized such that, in their original or "brand new" state, the outer surface of the rollers **208**, **210** would contact each other and/or interfere with each other if the adjustment mechanism used to adjust the position of the rotational axis of the roller **210** were set at its minimum pinch point gap position. This can be particularly advantageous because, over time, the outer surfaces of the rollers **208**, **210** will become deformed and/or wear away. As such, the rollers **208**, **210** may be removed from the sheet device **200** to be resurfaced. When the rollers **208**, **210** are resurfaced, the diameters of the rollers **208**, **210** are reduced. Thus, by mounting the rollers **208**, **210** such that they would interfere with each other were they positioned in the minimum pinch point gap position, the pinch point gap adjustment mechanism can accommodate the smaller size of the rollers **208**, **210** after resurfacing yet still achieve the desired magnitude of the pinch point gap.

With reference to FIG. **6**, the hopper **206** can be configured to contain masa (corn-based dough) between the rollers **208**, **210**. As noted above, the term "masa" is used to refer to a corn dough which is commonly used to form tortillas or tortilla chips. However, it is understood that the present sheeter device **200** can be used with other types of comestible products, such as, for example, grain-based doughs, doughy food mixtures, or other substances.

A drive system for the roller **208** can be disposed in the housing **204**. FIG. **6** illustrates a drive cover **210** which covers the drive system for the roller **208**. Such a drive system can be configured in any known manner.

In the illustrated embodiment, the roller **210** is mounted to as to be movable relative to the roller **208**. More specifically, the rotational axis of the roller **210** can be moved relative to the rotational axis of the roller **208**, described in greater detail below.

The drive system **212** for the roller **210** can be constructed using any known motor, such as stepper motors or server motors, and gear reduction drives. With reference to FIGS. **7** and **8**, the drive system **212** can include an electric motor **214** and a gear reduction drive **216**. The gear reduction drive **216** can be mounted directly to an axle **218** of the roller **210**. In this arrangement, the drive system **212** thus moves as the position of the axle **218** is moved, described in greater detail below. Thus, in the illustrated embodiment, the drive **212** is connected to a portion of the housing **204** with a linkage assembly **220**. The linkage assembly **220** prevents the drive system **212** from rotating relative to the housing **204**, and thus ensures proper transference of rotational energy from the motor **214** to the axle **218**

With reference to FIG. **9**, the sheeter **200** can also include two support plates **242**, **244** located at opposite sides of the housing **204**. FIG. **9** includes a right side elevational view of the plate **242**. The plates **242**, **244** support both of the rollers **208**, **210**, as well as other devices.

The plate **242** can be made from any desired material. It is most common in the food industry to use stainless steel for all components that will come into contact with any food product. Additionally, the illustrated embodiment is designed to roll masa. As such, the plates **242**, **244** should be designed to withstand approximately 10,000 pounds of force each. In practice, during operation, a sheet such as the sheeter **200** can experience loads of about 15,000 pounds between the rollers, i.e., the masa being squeezed between the rollers **208**, **210** experts about 15,000 pounds of pushing force pushing the rollers **208**, **210** away from each other. Thus, the plates **242**, **244**, in some embodiments, can be made from stainless steel of a thickness of about 1" or greater.

The adjustment drive system **240** can include an electric motor **242** and a gear reduction device **243**. The gear reduction device can be used to drive a chain drive mechanism covered by a chain drive cover **246**. In some embodiments, the sheeter **200** can include to adjustment drive systems located at opposite ends of the roller **210**. However, in the description set forth below, only one adjustment drive system **240** is described. It is to be understood that in some embodiments, an identical adjustment drive system **240** can be disposed at the opposite end of the roller **210**.

With reference to FIGS. **10** and **11**, the chain drive cover **246** has been removed exposing the chain drive assembly **248**. The chain drive assembly **248** can include a drive spur **250**, a drive chain **252**, and a driven spur **254**. In the illustrated embodiment, the drive **248** is a double chain arrangement. Thus, the drive spur **250** has two sets of teeth in the form of a double spur, there are two chains **252**, and the driven spur **254** has two sets of teeth just as the drive spur **250**. As shown in FIG. **10**, the rotational axis **260** of the driven spur **254** is offset from the rotational axis **262** of the roller **210**.

In some embodiments, a position tab **264** can be mounted on the driven spurs **254** to aid in sensing a rotational position of the driven spurs **254**. For example, in some embodiments, proximity sensors or other types of sensor can be mounted to a sensor bracket **266** so as to detect the presence of the position tab **264** and thus provide a means for an associated control system to determine the rotational position of the drive spur **255**. Other sensors can also be used, such as any of those disclosed in U.S. Pat. No. 5,470,599, or any other sensors.

FIGS. **12** and **13** illustrate exploded views of the eccentric drive assembly for changing the spacing of the rotational axis **262** of the roller **210** relative to the rotational axis **269** and of the roller **208**. FIG. **14** illustrates a cross-sectional view of the eccentric drive assembly in an assembled state and.

With continued reference to FIGS. **12**, **13**, and **14**, the roller **210** includes an axle **270**. The axle **270** is supported by a bearing **272**, which can be in the form of a roller bearing unit. The outer surface of the bearing **272** is designed to rest within an eccentric adjustment plate **274**. As illustrated in FIG. **13**, the inner bore of eccentric adjustment plate **274** has an axis that is offset from the axis of the outer surface of the eccentric adjustment plate **274**.

The outer surface of the eccentric plate **274** is designed to fit within the bearing sleeve **276**. Retaining plates **278**, **280** secure the bearing **272**, eccentric plate **274**, and the sleeve **276** within a u-shaped recess **282** formed in the plate **242**.

With reference to FIG. **12**, the plate **242** also includes a removable journal **290**. With the journal **290** inserted into the u-shaped recess **282**, the retaining plates **280** and **278** can be bolted to each other, through a series of bolt holes provided around the u-shaped recess **282** and the journal member **290**. As such, as shown in FIG. **14**, the retaining plates **278**, **280** and the journal **290** are all fixed relative to the plate **242**.

An additional eccentric drive plate **294** can also be partially journaled within the inner bore **296** of the eccentric plate **274**. Additional bolts can be extended through the bolt hole patterns in the driven spurs **254**, retaining ring **298**, the eccentric drive plate **294** and the eccentric plate **274**. As such, the driven spurs **254** are rotationally coupled with the eccentric plate **274**. Thus, as the drive spurs **254** are rotated, the bearing **272** and thus the axle **270** of the roller **210** revolve along a circular path about the axis **260**, thereby changing the spacing between the rotational axis **262** relative to the rotational axis **269** of the roller **208**, and thereby change the spacing between the outer surfaces of the rollers, i.e., the "pinch point gap".

As noted above, the sheeter device **200** can include a control system configured to control the speed of the rollers **208**, **210**, as well as the roller spacing drive system **248**. Such a control system can include various sensors, feedback control system components, actuators, and user interface devices. Such a control system is disclosed in U.S. Pat. No. 5,470,599 which is hereby expressly incorporated by reference. For example, such a control system can include a controller device and at least one sensor configured to detect a magnitude for the pinch point gap. The controller device, can be configured to drive the adjustment drive system **240** so as to adjust the detected size of the pinch point gap, as detected by the sensor, to a desired magnitude, which can be input into the controller device by a user. Such a configuration and programming of the controller device is within the skill of one of ordinary skill in the art, in light of the disclosure above and that set forth in U.S. Pat. No. 5,470,599.

While at least one exemplary embodiment has been presented in the foregoing detailed description, it should be appreciated that a vast number of variations exist. It should also be appreciated that the exemplary embodiment or embodiments described herein are not intended to limit the scope, applicability, or configuration of the claimed subject matter in any way. Rather, the foregoing detailed description will provide those skilled in the art with a convenient road map for implementing the described embodiment or embodiments. It should be understood that various changes can be made in the function and arrangement of elements without departing from the scope defined by the claims, which includes known equivalents and foreseeable equivalents at the time of filing this patent application.

The invention claimed is:

1. A method of adjusting a spacing of two rollers, comprising:

driving a first roller about a first axis with a first drive mechanism comprising a first motor, the first drive mechanism directly connected to the first roller which is supported by a support housing;

supporting a second roller with the support housing so as to rotate about a second axis spaced from the first axis such that juxtaposed portions of outer surfaces of the first and second rollers define a pinch point gap;

revolving the first roller and the first drive mechanism including the first motor, such that the first axis, the first roller, and the first motor revolve about a third axis spaced from the first and second axes thereby changing a magnitude of the pinch point gap; and

preventing the first drive mechanism from rotating relative to the support housing with a linkage connecting the first drive mechanism to the support housing.

2. The method according to claim **1**, wherein the step of revolving comprises revolving a roller mounting plate which supports the first roller relative to the support housing.

3. The method according to claim **1**, wherein the step of supporting comprises supporting the first roller with a first roller bearing unit and a first axle extending through the first axis, the first axle being supported by the first roller bearing unit.

4. The method according to claim **1**, additionally comprising detecting a magnitude of the pinch point gap, wherein the step of revolving comprises revolving of the first roller to change the pinch point gap based on the detected magnitude of the pinch point gap.

5. The method according to claim **1**, additionally comprising pressing dough with the first and second rollers into a sheet of dough having a generally uniform thickness.

6. The rolling device according to claim **1**, additionally comprising imparting a load of 15,000 pounds between the first and second rollers with dough disposed in the pinch point gap.

7. The rolling device according to claim **1** additionally supporting the first motor and the first roller together with the support housing.

8. The rolling device according to claim **1** additionally comprising mounting the first motor directly on a shaft of the first roller, wherein driving the first roller comprises rotating the first shaft about the first axis with the first motor.

* * * * *