US009428817B2

(12) **United States Patent**
Greene

(10) **Patent No.: US 9,428,817 B2**
(45) **Date of Patent: Aug. 30, 2016**

(54) **FOOTWEAR AND OTHER PRODUCTS INCORPORATING CULTURED LEATHER**

(75) Inventor: **Pamela S. Greene**, Portland, OR (US)

(73) Assignee: **NIKE, Inc.**, Beaverton, OR (US)

(*) Notice: Subject to any disclaimer, the term of this patent is extended or adjusted under 35 U.S.C. 154(b) by 927 days.

(21) Appl. No.: **12/847,785**

(22) Filed: **Jul. 30, 2010**

(65) **Prior Publication Data**

US 2012/0023777 A1 Feb. 2, 2012

(51) **Int. Cl.**

A43B 1/02	(2006.01)
A43B 23/02	(2006.01)
C14C 13/02	(2006.01)
B32B 9/02	(2006.01)
A45C 3/00	(2006.01)

(52) **U.S. Cl.**

CPC ***C14C 13/02*** (2013.01); ***A43B 1/02*** (2013.01); ***A43B 23/021*** (2013.01); ***A43B 23/026*** (2013.01); ***A43B 23/0235*** (2013.01); ***A45C 3/001*** (2013.01); ***B32B 9/025*** (2013.01); *B32B 2437/00* (2013.01); *Y10T 428/1348* (2015.01); *Y10T 428/31768* (2015.04)

(58) **Field of Classification Search**

CPC .. A43B 1/02; A43B 23/021; A43B 23/0215; A43B 23/024; C14C 13/02; B32B 9/025; Y10T 428/1348

USPC 36/45, 83, 98

See application file for complete search history.

(56) **References Cited**

U.S. PATENT DOCUMENTS

2,398,623	A *	4/1946	Daniels	12/146 R
2,673,171	A *	3/1954	Bellavoine	428/138
4,325,236	A *	4/1982	Tsui	69/21
5,371,957	A *	12/1994	Gaudio	36/50.1
5,659,914	A *	8/1997	Steinlauf	12/145
6,962,010	B2 *	11/2005	Huff	36/69
2007/0184742	A1 *	8/2007	Coulson et al.	442/370
2009/0286092	A1 *	11/2009	Azar-Pey	428/457

FOREIGN PATENT DOCUMENTS

EP 1589098 10/2005

OTHER PUBLICATIONS

Article entitled, "Cell Culture" as published on www.wikipedia.com and downloaded Dec. 6, 2010.

Article entitled, "Victimless Leather-A Prototype of Stitch-less Jacket grown in a Technoscientific 'Body'" available at http://www.tca.uwa.edu.au/vl/vl.html (last visited Sep. 20, 2013).

http://www.tca.uwa.edu.au/vl/images.html (last visited Sep. 20, 2013).

Article entitled, "The Tissue Culture and Art Project: The Manifesto" available at http://tcaproject.org/ (last visited Sep. 20, 2013).

(Continued)

Primary Examiner — Khoa Huynh

Assistant Examiner — Sharon M Prange

(74) *Attorney, Agent, or Firm* — Honigman Miller Schwartz and Cohn LLP; Matthew H. Szalach; Jonathan P. O'Brien

(57) **ABSTRACT**

A variety of products may incorporate cultured leather, which is produced in vitro. Examples of products that may incorporate cultured leather include footwear, apparel, athletic equipment, furniture, handbags or any other consumer or industrial product that commonly incorporates conventional leather or synthetic leather.

18 Claims, 22 Drawing Sheets

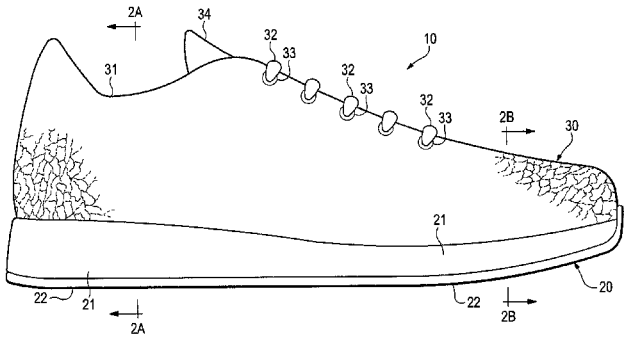

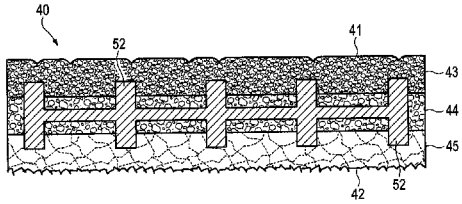

(56) **References Cited**

OTHER PUBLICATIONS

Article entitled "Victimless Leather: A Prototype of Stitch-less Jacket grown in a Technoscientific 'Body', 2004" available at http://tcaproject.org/projects/victimless/leather (last visited Sep. 20, 2013).

Article entitled "Victimless Leather" available at http://en.wikipedia.org/wiki/Victimless_Leather (last visited Sep. 20, 2013).

* cited by examiner

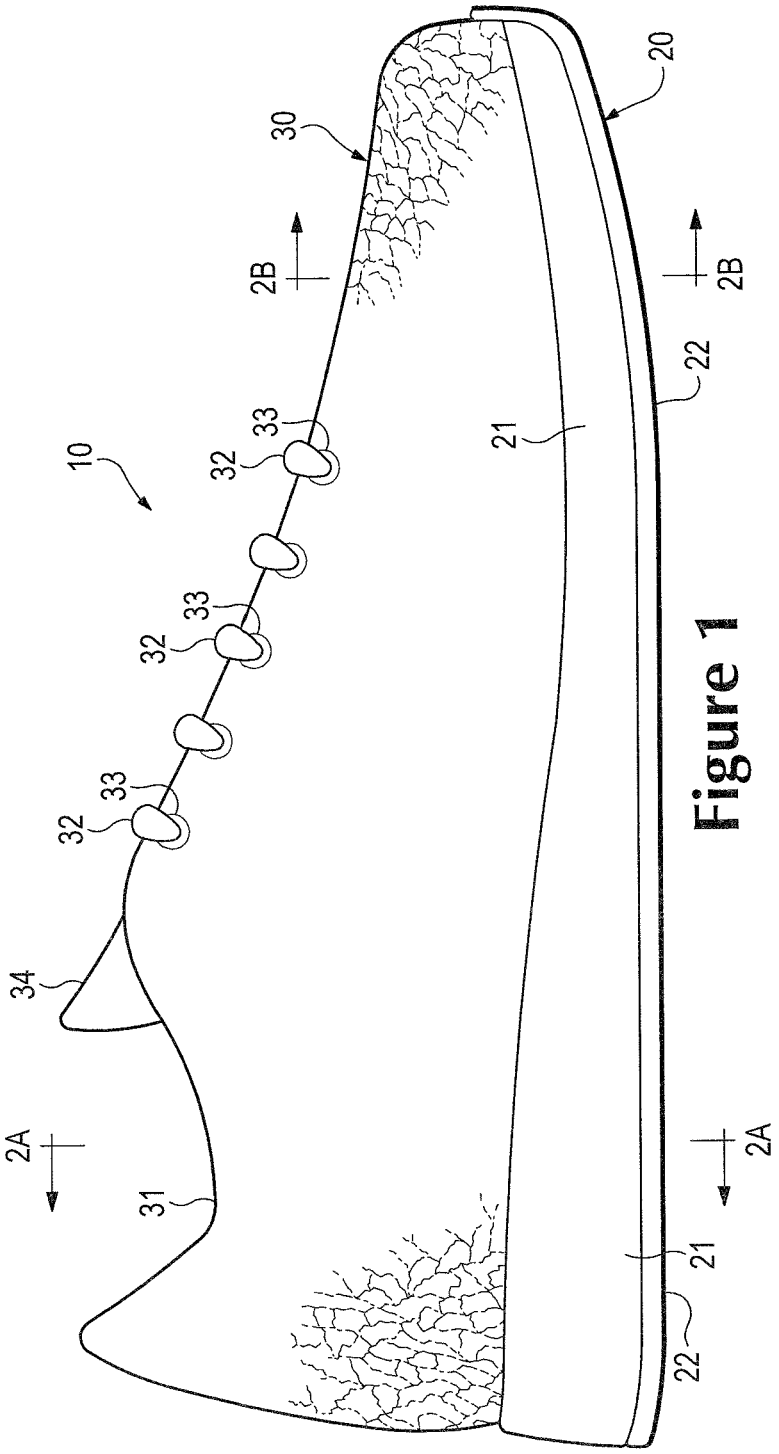

Figure 1

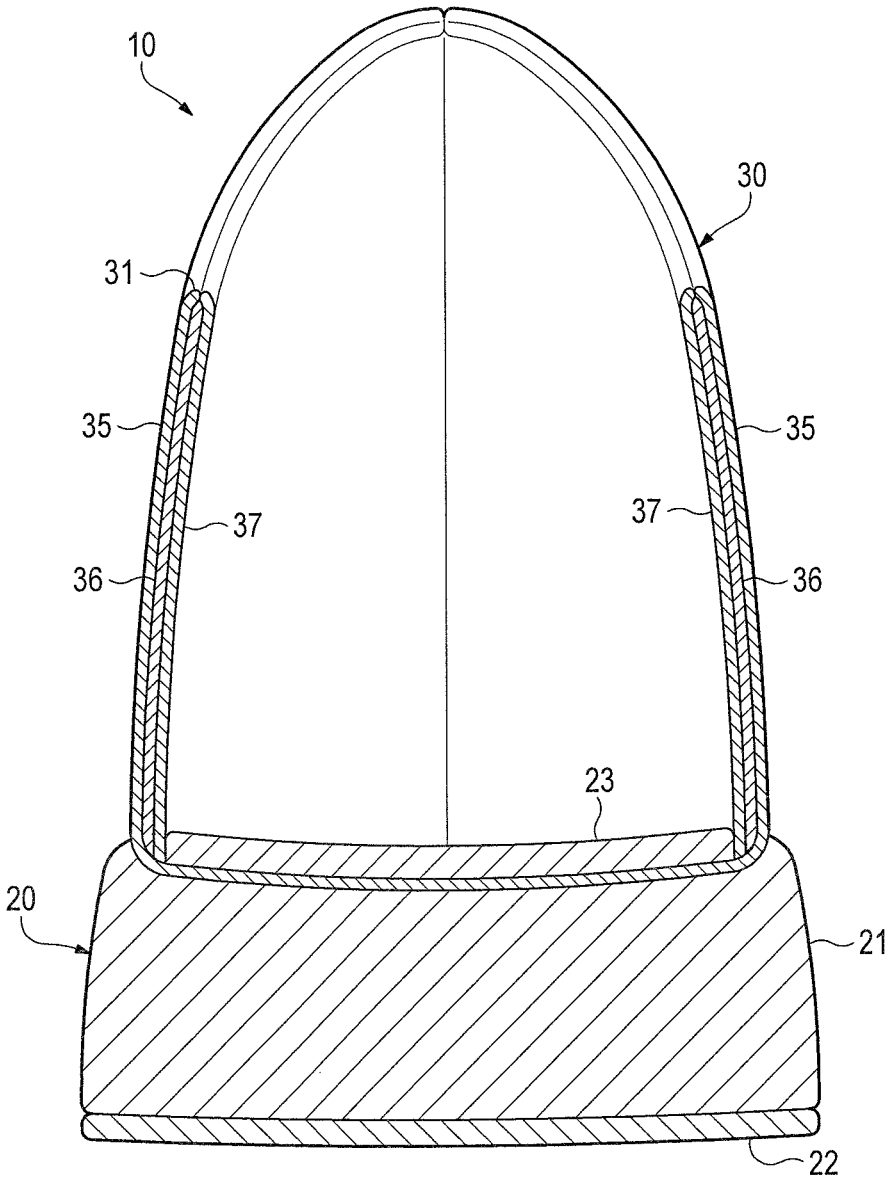

Figure 2A

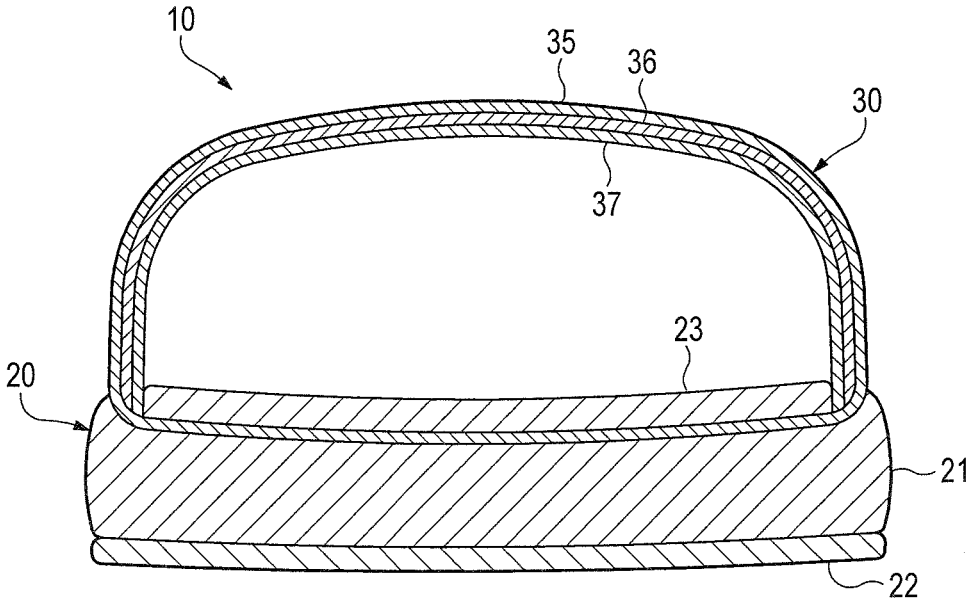

Figure 2B

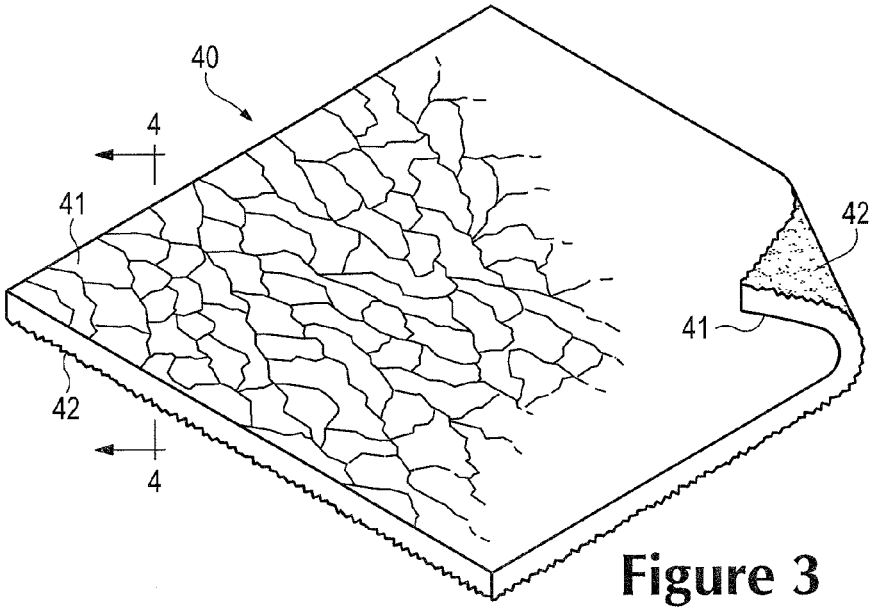

Figure 3

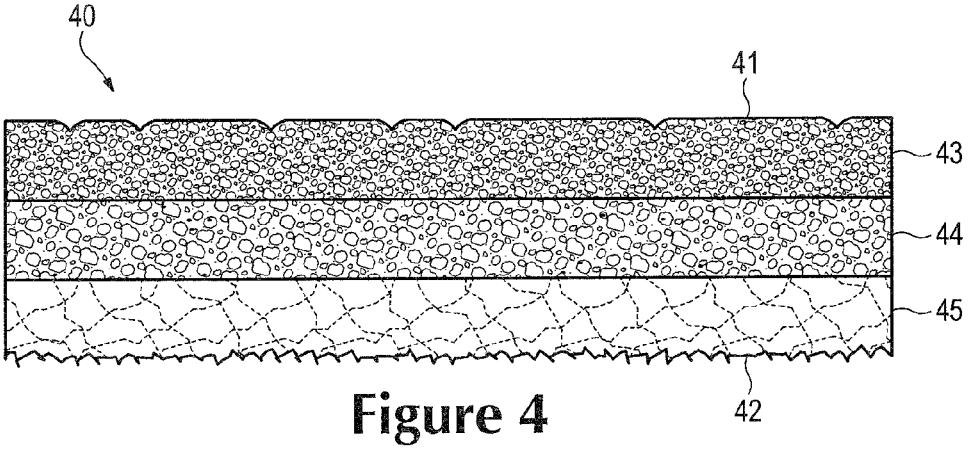

Figure 4

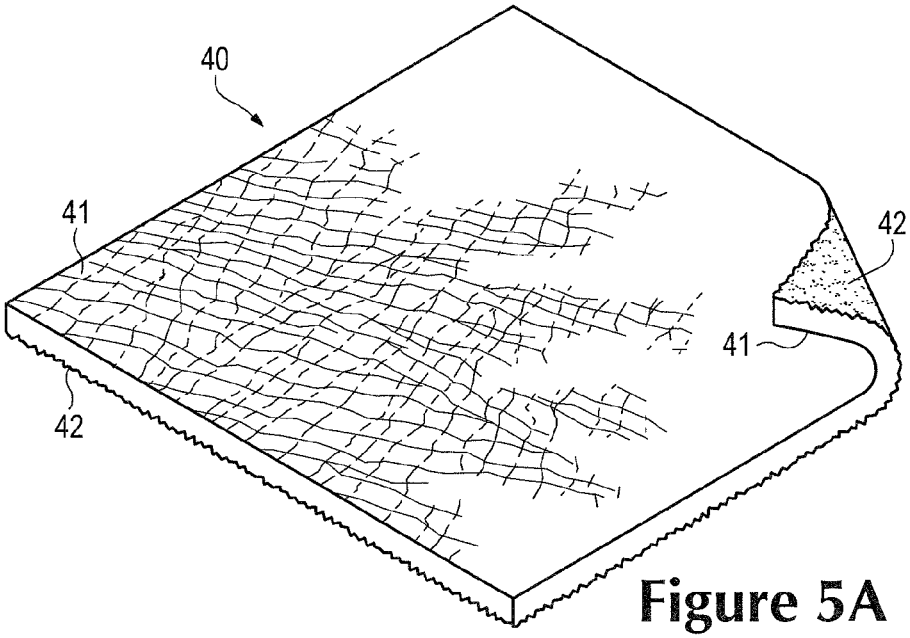

Figure 5A

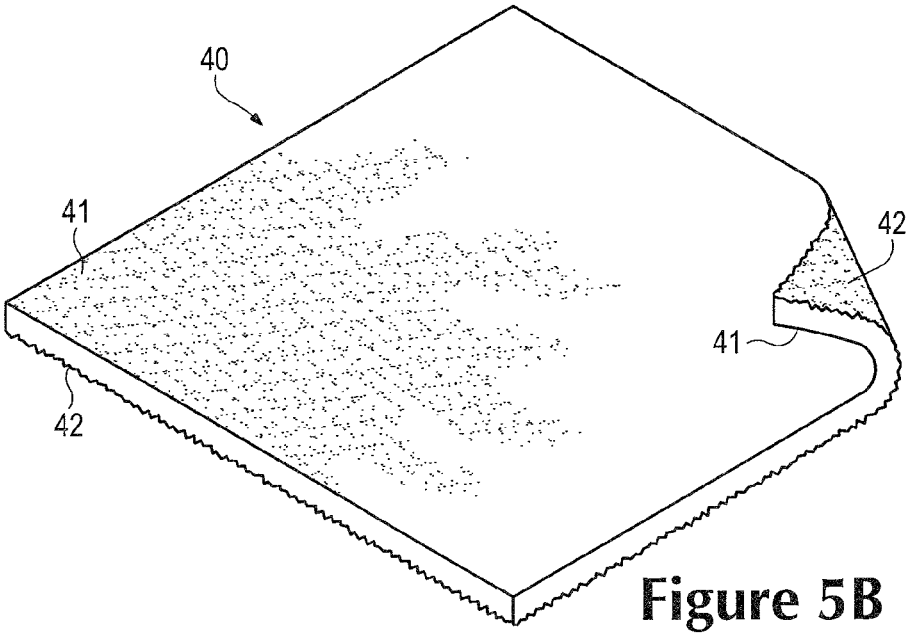

Figure 5B

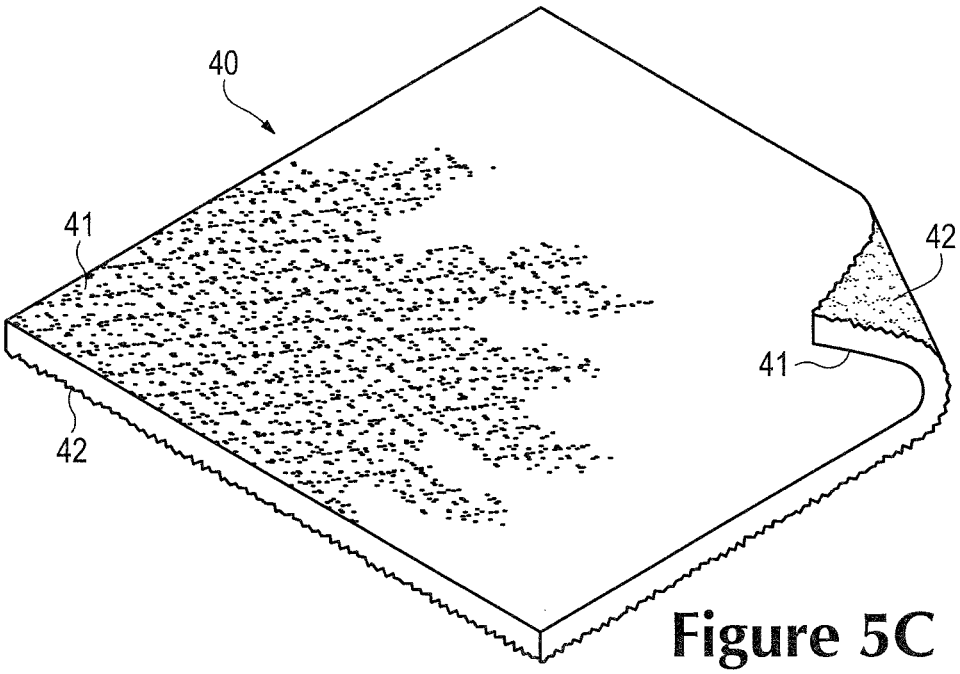

Figure 5C

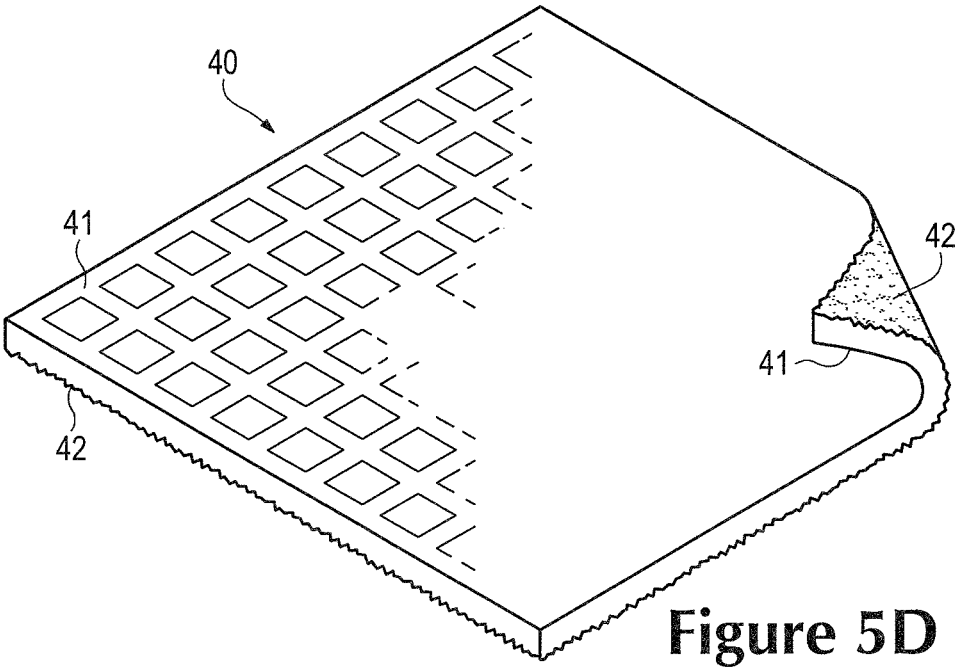

Figure 5D

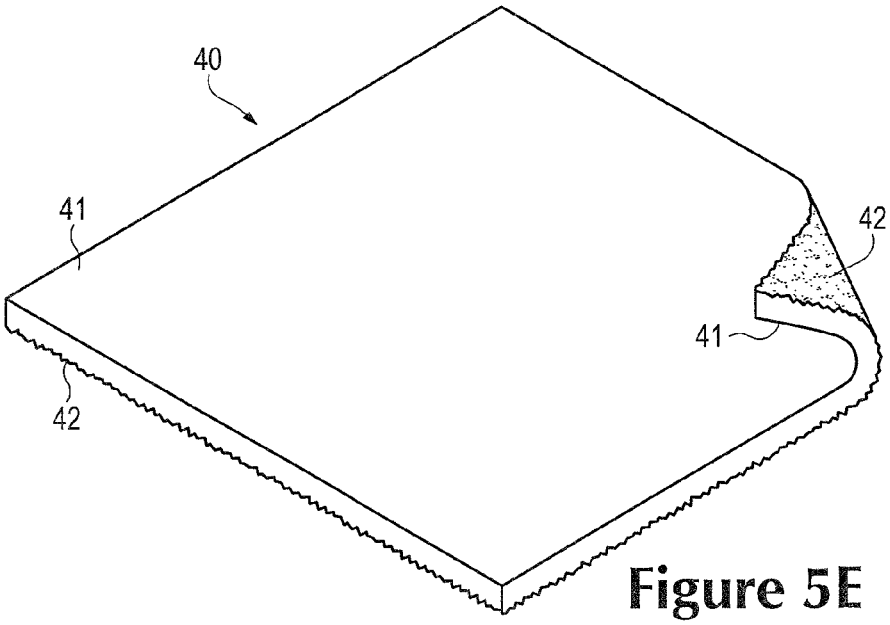

Figure 5E

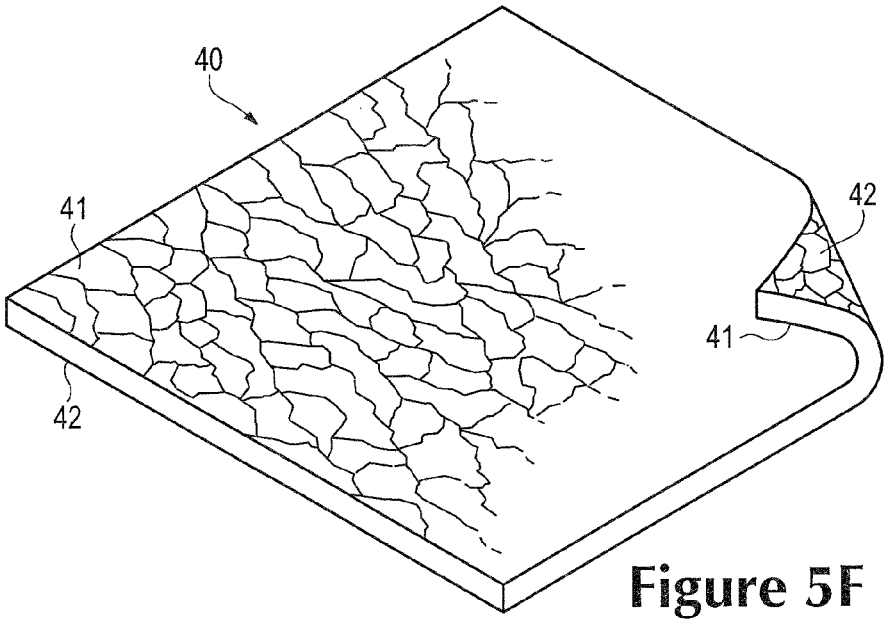

Figure 5F

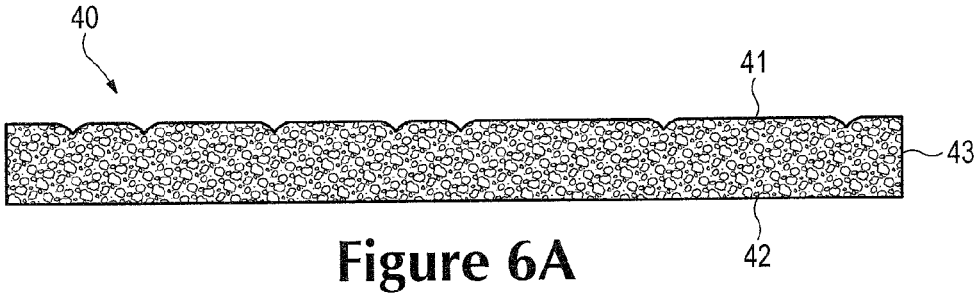

Figure 6A

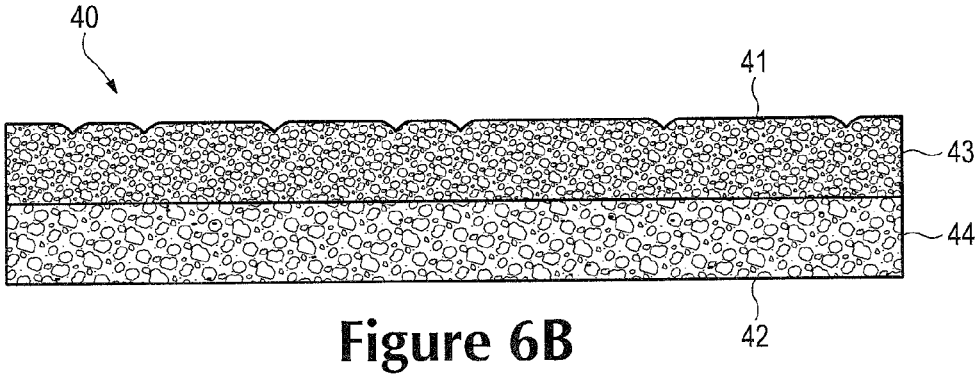

Figure 6B

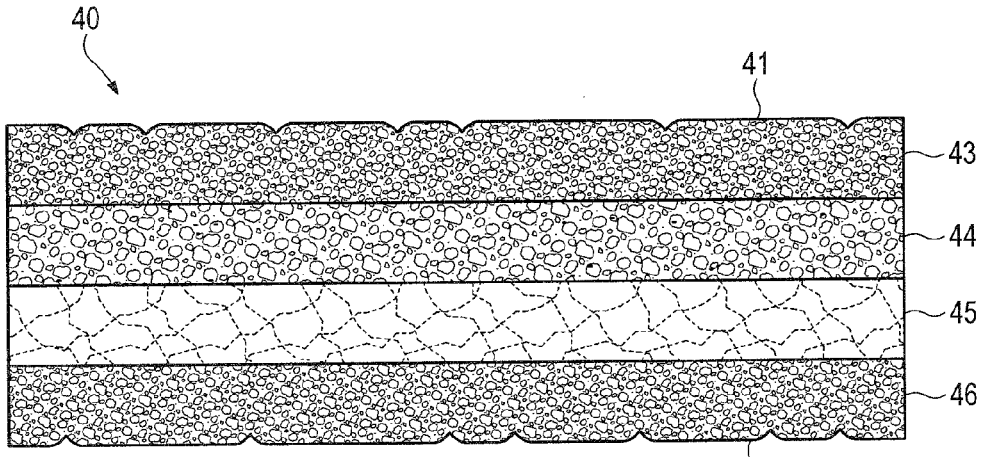

Figure 6C

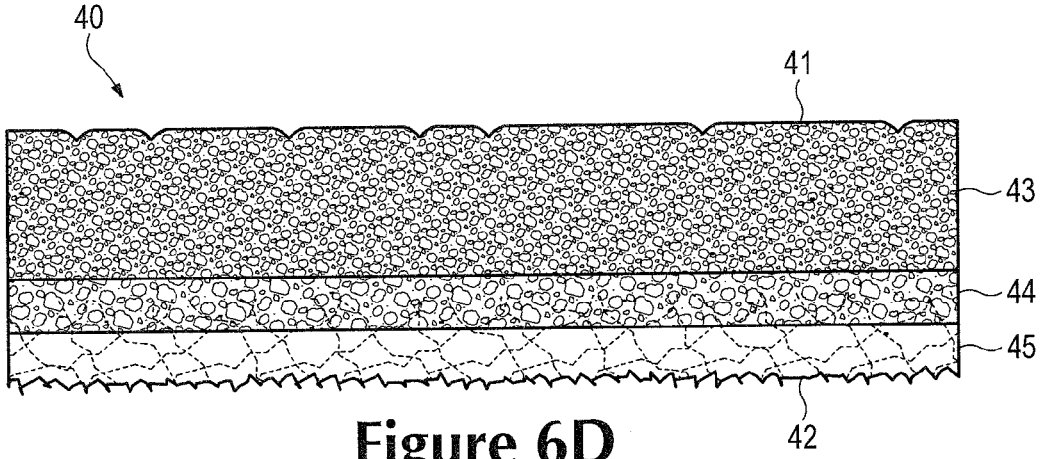

Figure 6D

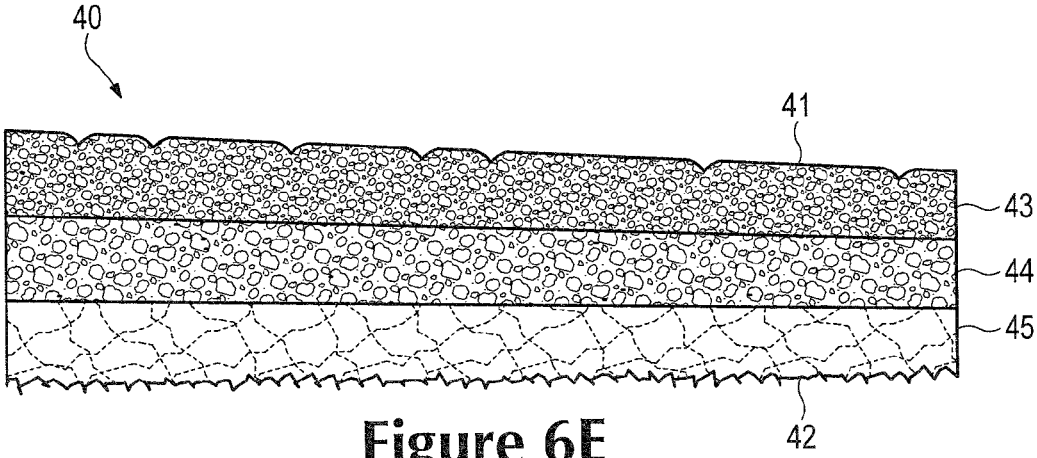

Figure 6E

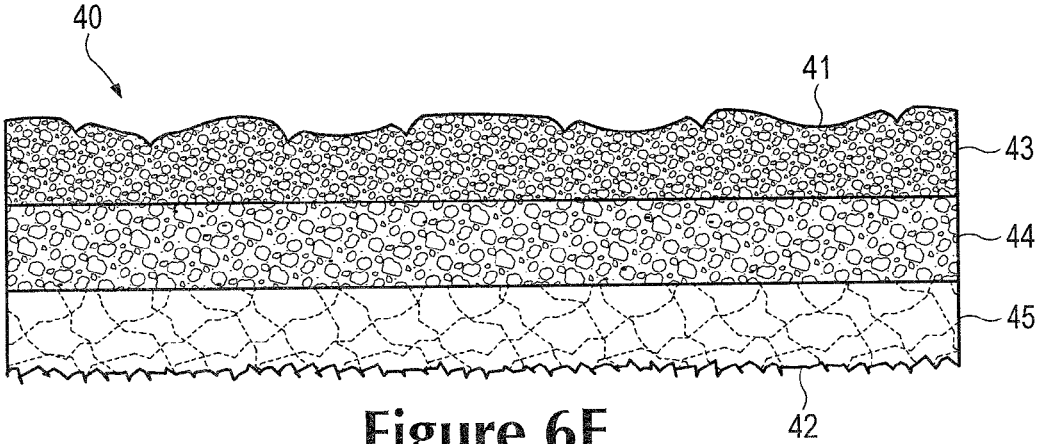

Figure 6F

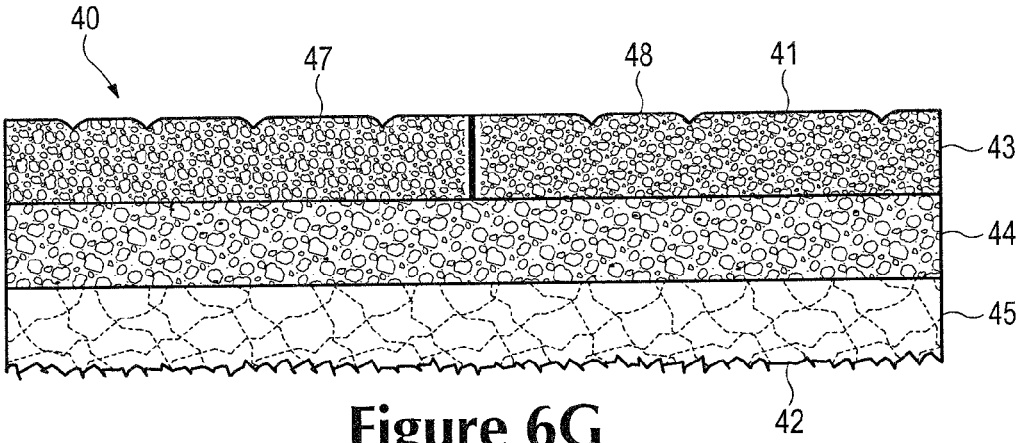

Figure 6G

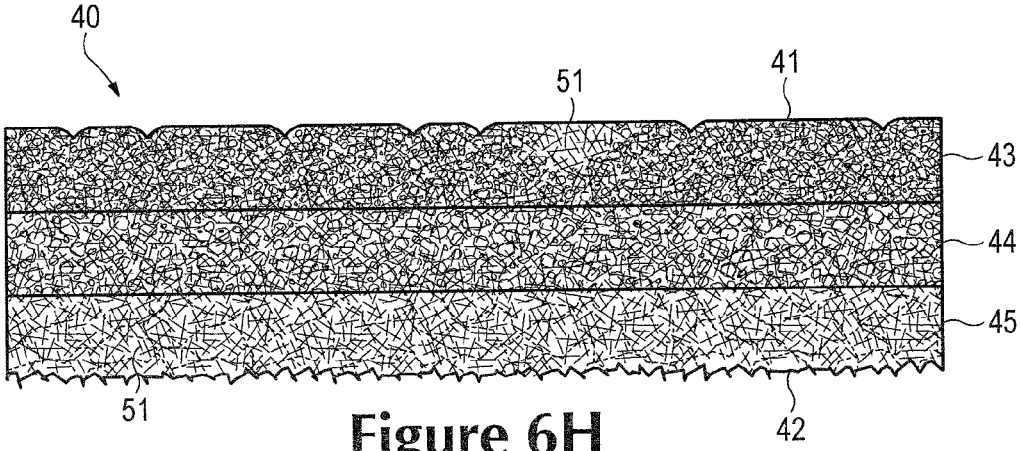

Figure 6H

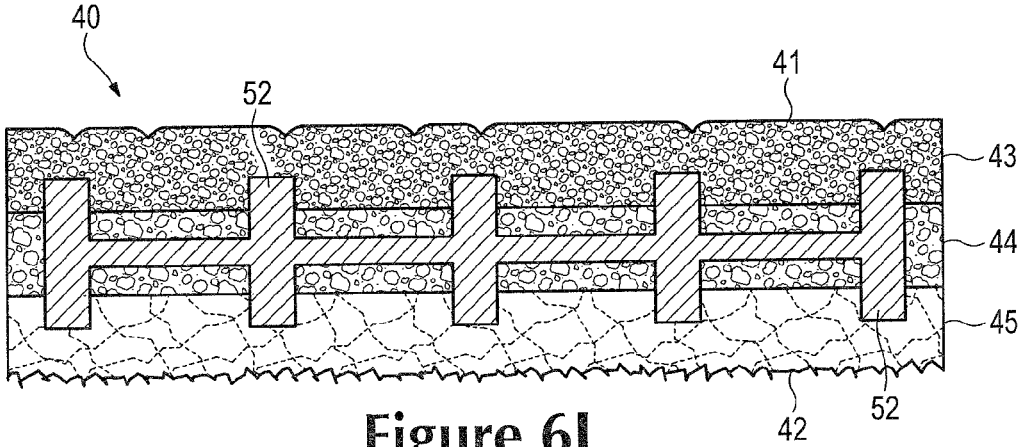

Figure 6I

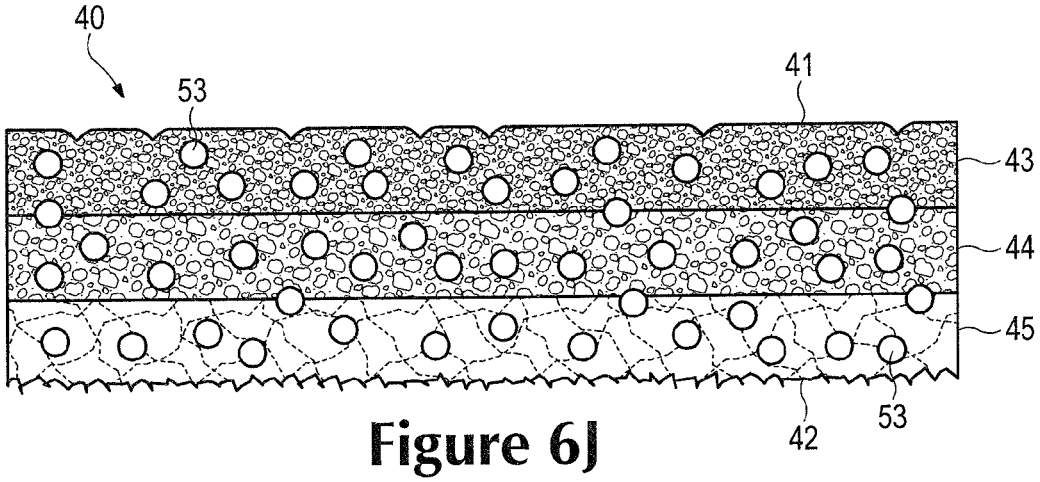

Figure 6J

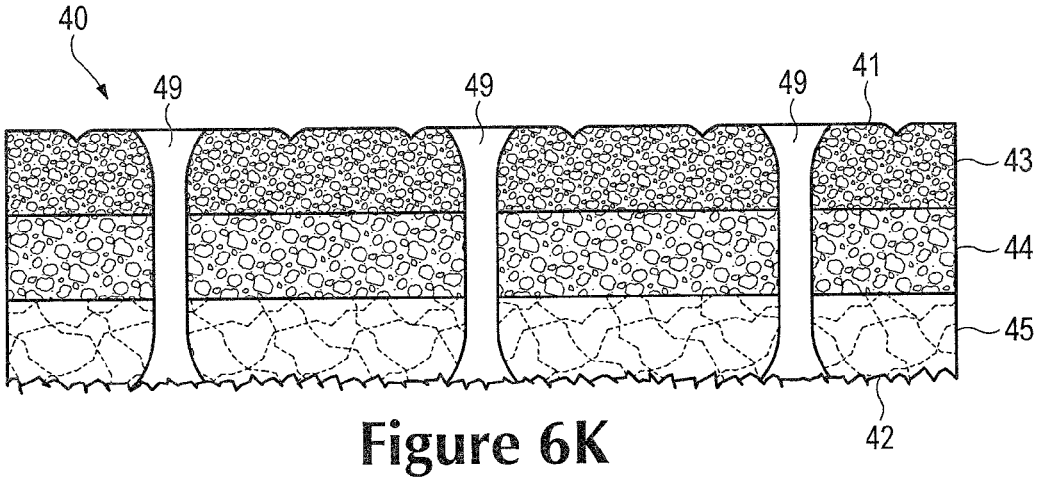

Figure 6K

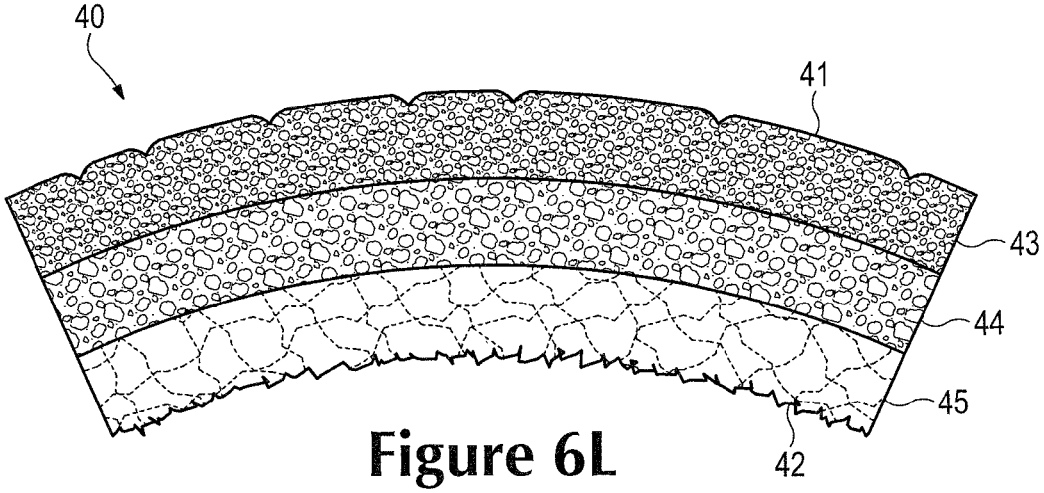

Figure 6L

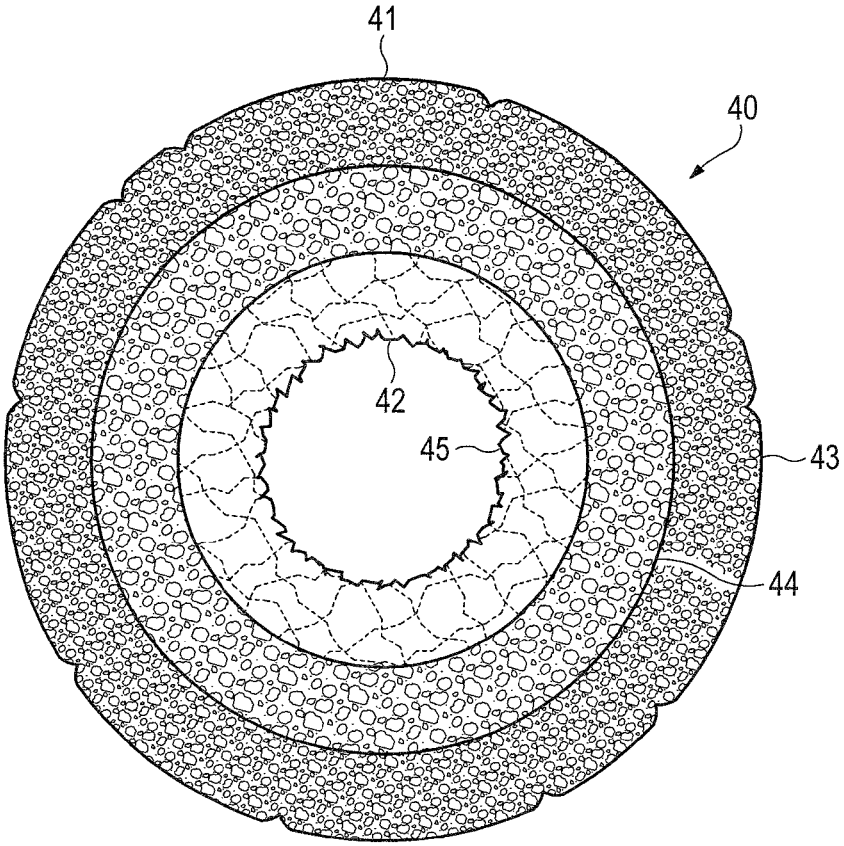

Figure 6M

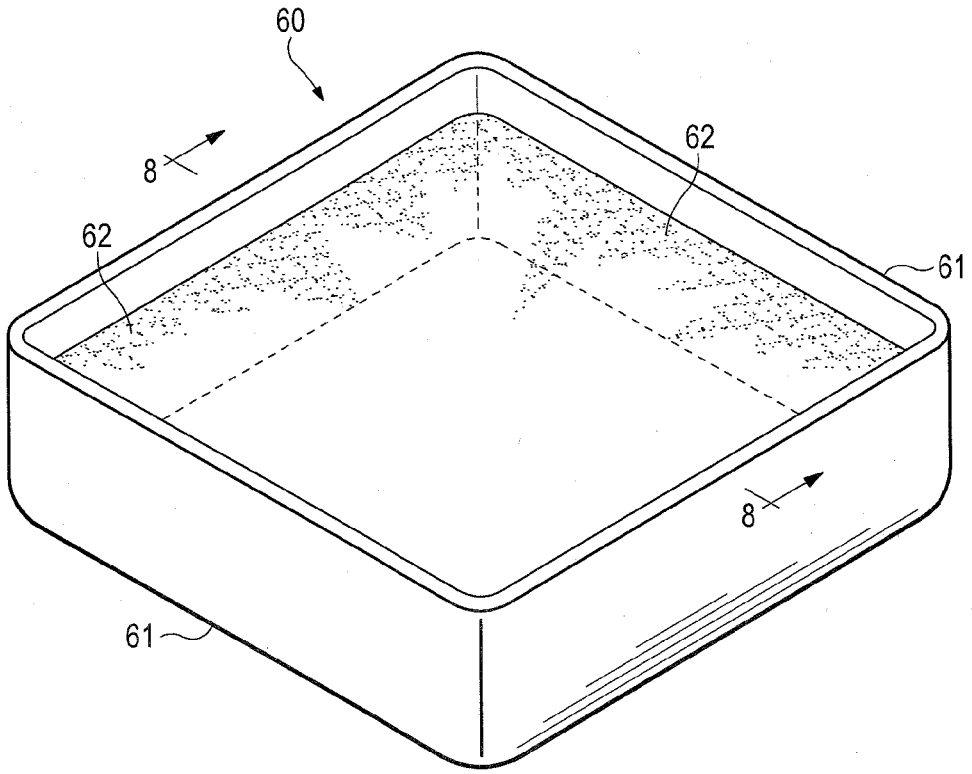

Figure 7

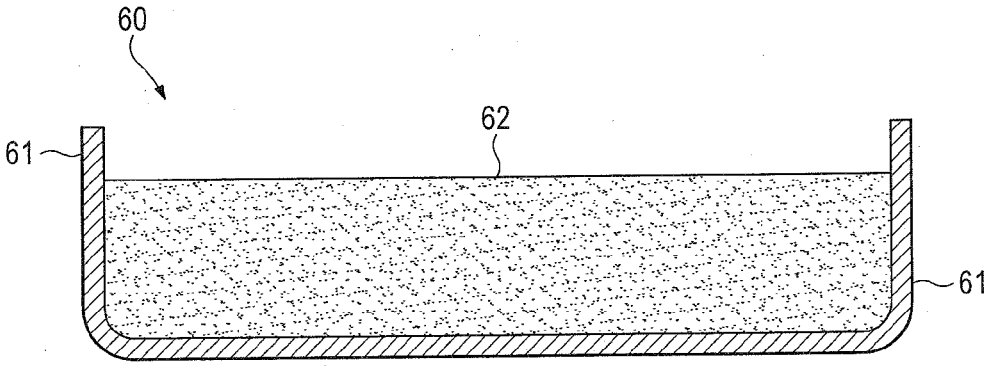

Figure 8

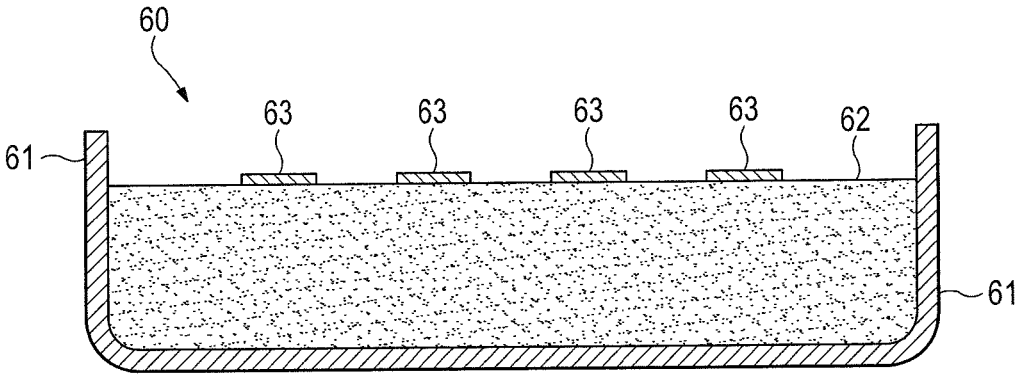

Figure 9A

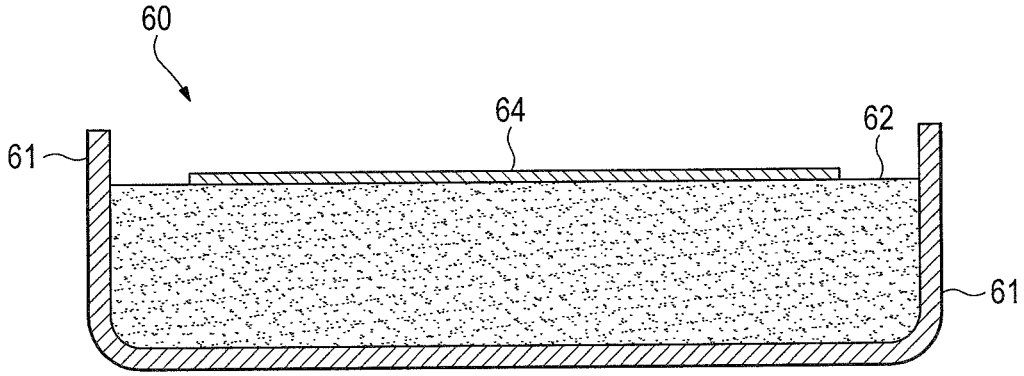

Figure 9B

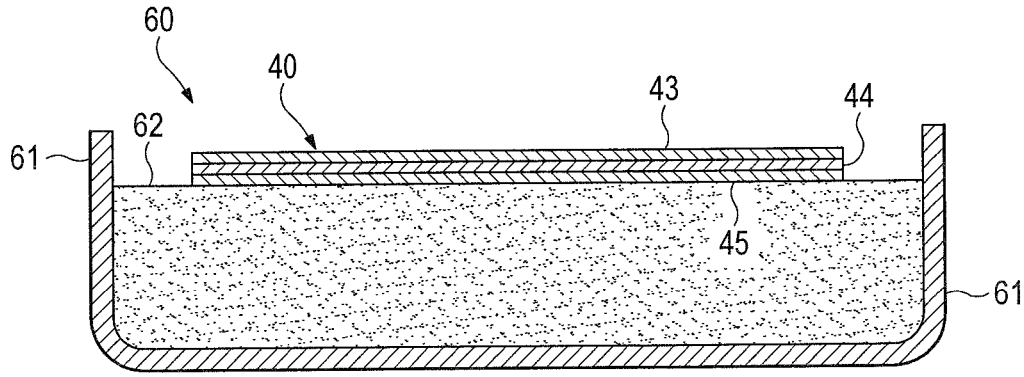

Figure 9C

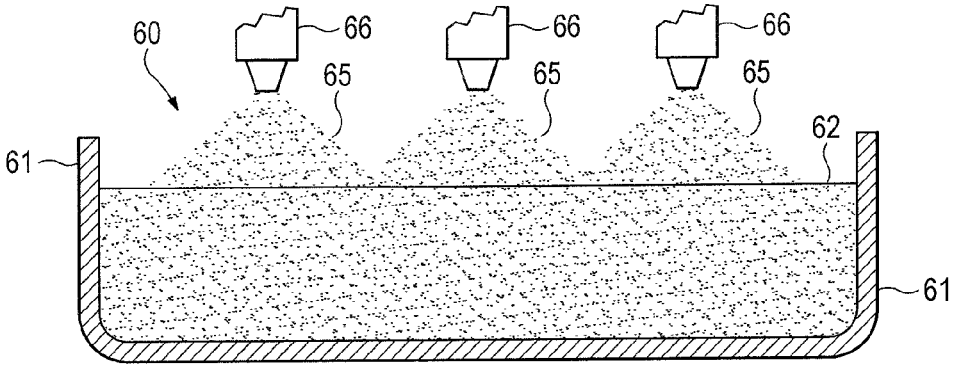

Figure 10A

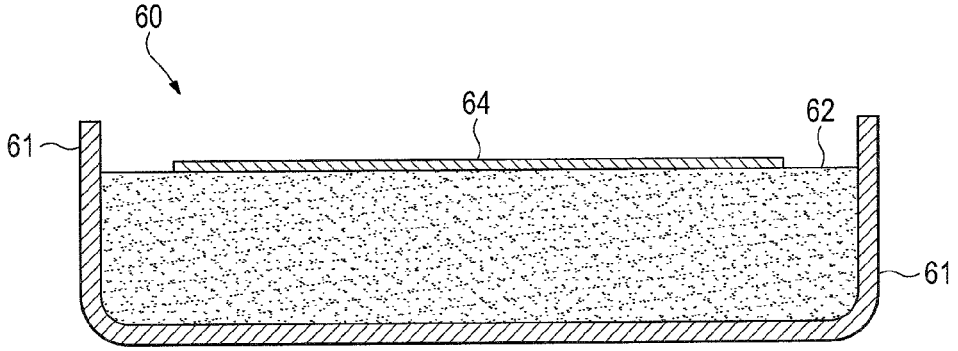

Figure 10B

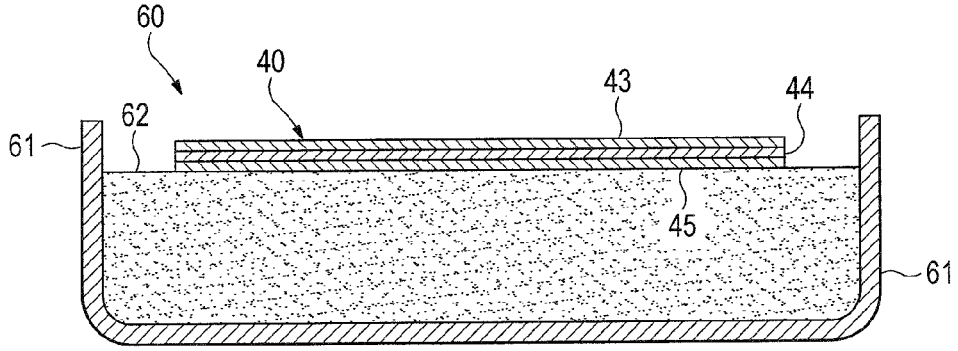

Figure 10C

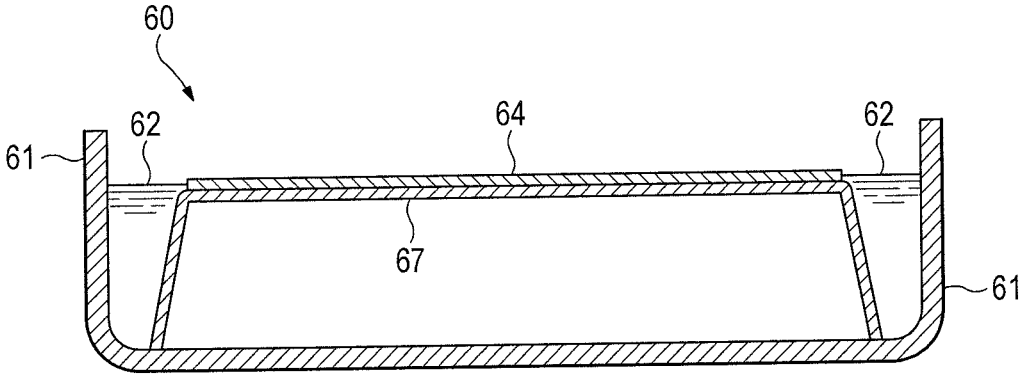

Figure 11A

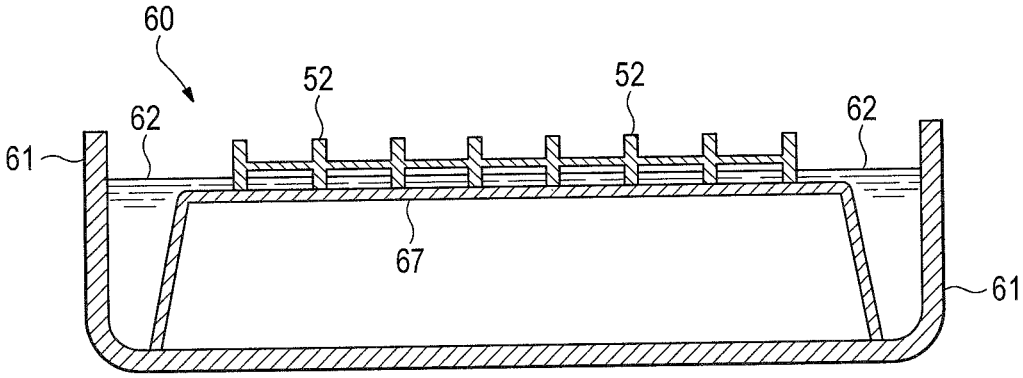

Figure 11B

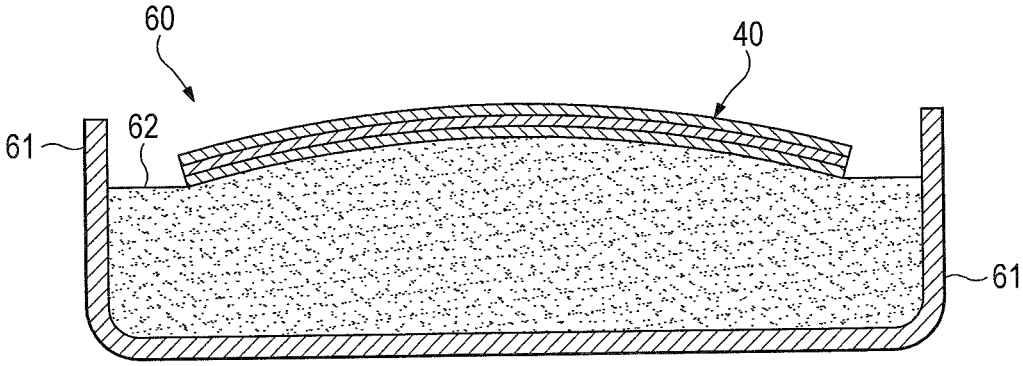

Figure 11C

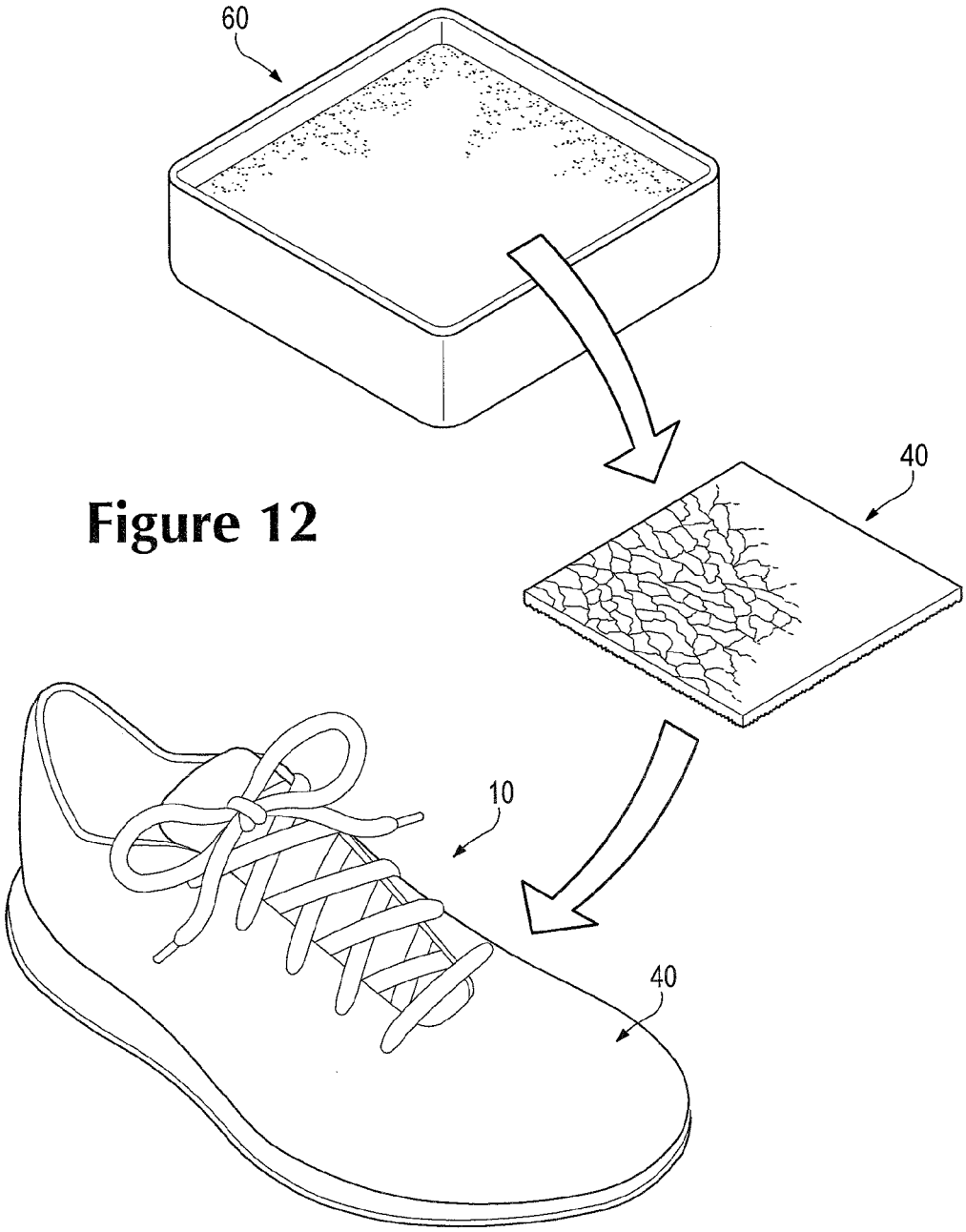

Figure 12

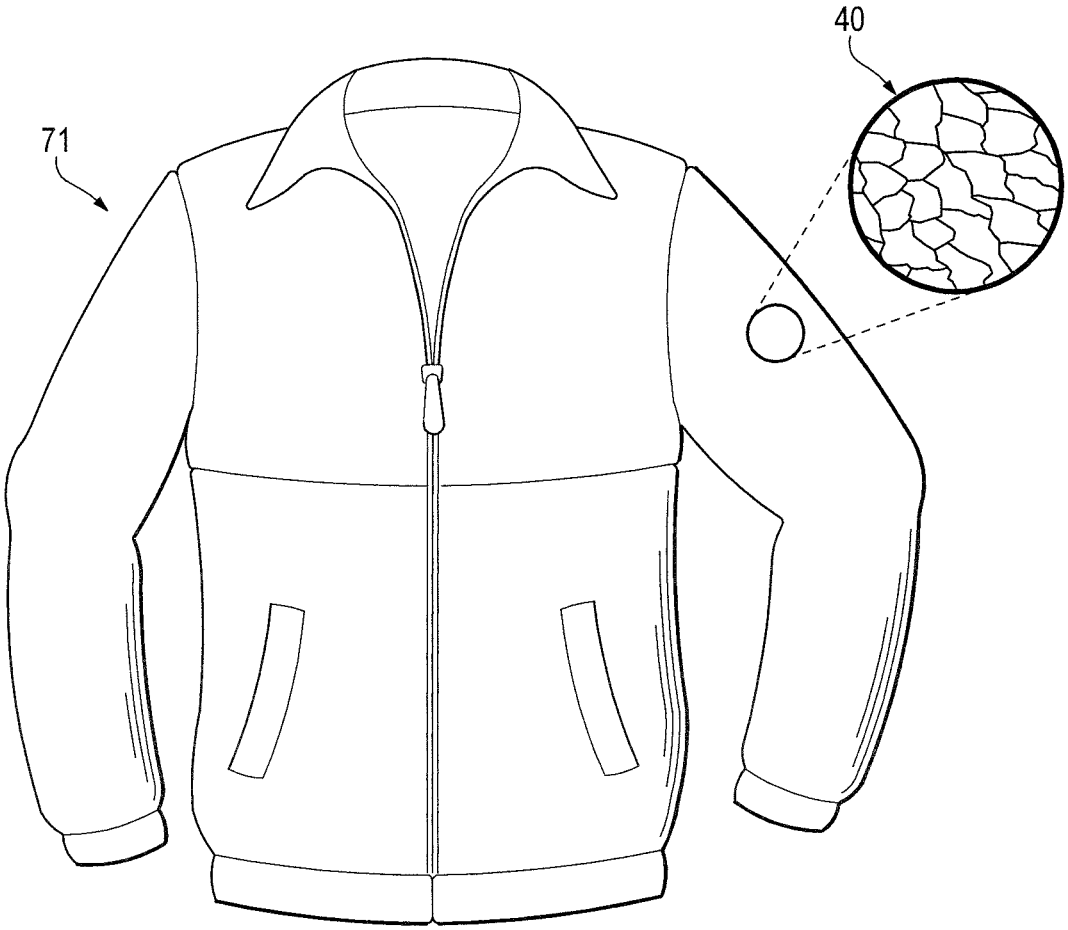

Figure 13A

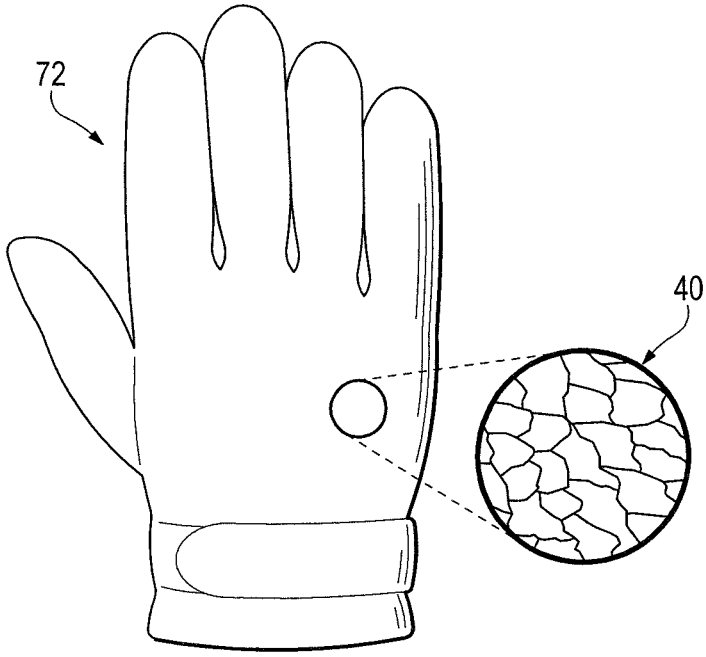

Figure 13B

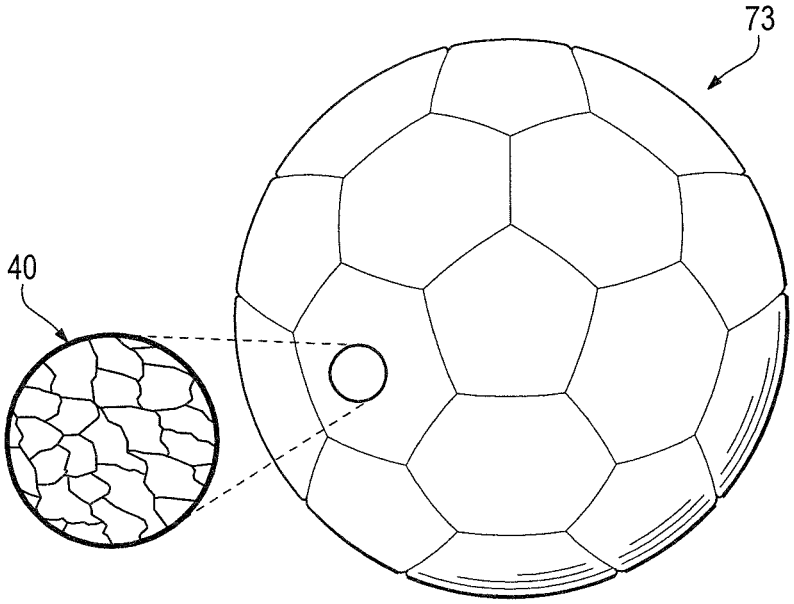

Figure 13C

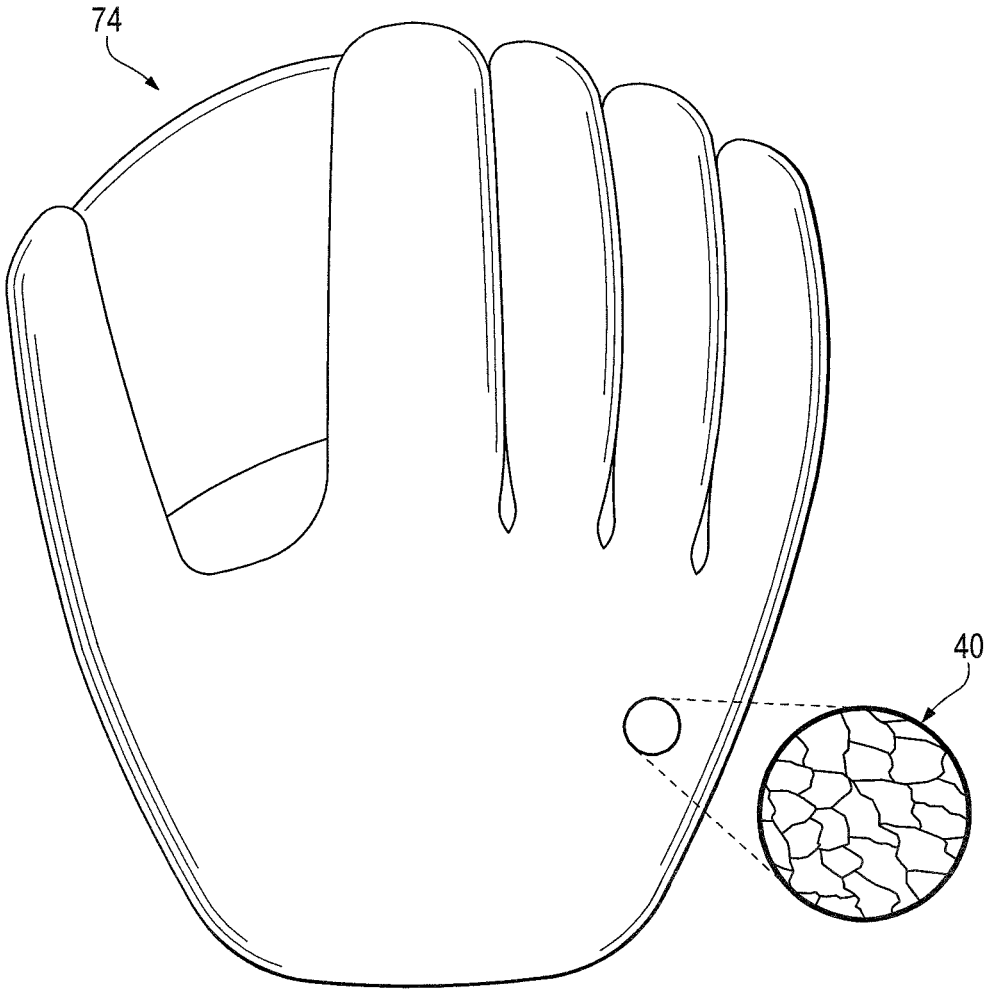

Figure 13D

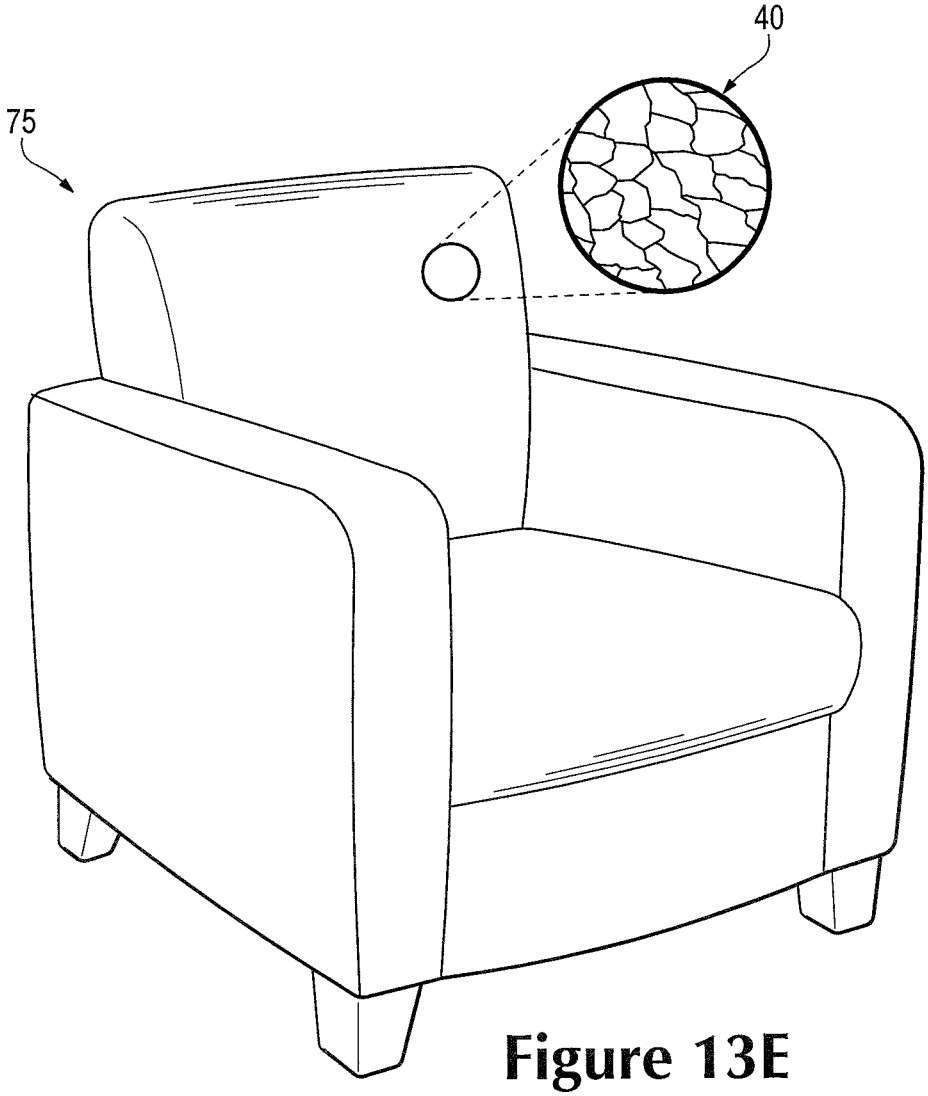

Figure 13E

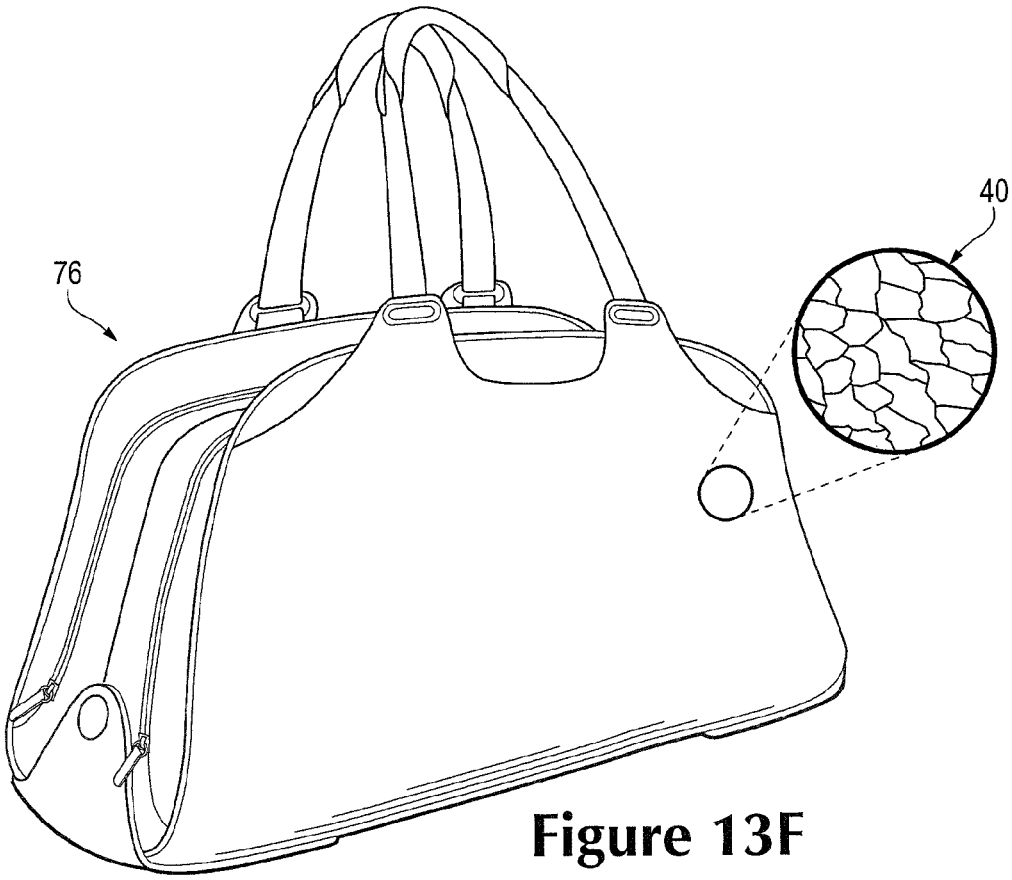

Figure 13F

FOOTWEAR AND OTHER PRODUCTS INCORPORATING CULTURED LEATHER

BACKGROUND

Conventional articles of footwear generally include two primary elements, an upper and a sole structure. The upper is secured to the sole structure and forms a void on the interior of the footwear for comfortably and securely receiving a foot. The sole structure is secured to a lower area of the upper, thereby being positioned between the upper and the ground. In athletic footwear, for example, the sole structure may include a midsole and an outsole. The midsole often includes a polymer foam material that attenuates ground reaction forces to lessen stresses upon the foot and leg during walking, running, and other ambulatory activities. Additionally, the midsole may include fluid-filled chambers, plates, moderators, or other elements that further attenuate forces, enhance stability, or influence the motions of the foot. The outsole is secured to a lower surface of the midsole and provides a ground-engaging portion of the sole structure formed from a durable and wear-resistant material, usually rubber. The sole structure may also include a sockliner positioned within the void and proximal a lower surface of the foot to enhance footwear comfort.

The upper generally extends over the instep and toe areas of the foot, along the medial and lateral sides of the foot, under the foot, and around the heel area of the foot. In some articles of footwear, such as basketball footwear and boots, the upper may extend upward and around the ankle to provide support or protection for the ankle. Access to the void on the interior of the upper is generally provided by an ankle opening in a heel region of the footwear. A lacing system is often incorporated into the upper to adjust the fit of the upper, thereby permitting entry and removal of the foot from the void within the upper. The lacing system also permits the wearer to modify certain dimensions of the upper, particularly girth, to accommodate feet with varying dimensions. In addition, the upper may include a tongue that extends under the lacing system to enhance adjustability of the footwear, and the upper may incorporate a heel counter to limit movement of the heel. A variety of material elements (e.g., textiles, polymer foam, polymer sheets, leather, synthetic leather) are conventionally utilized in manufacturing the upper. In athletic footwear, for example, the upper may have multiple layers that each include a variety of joined material elements.

SUMMARY

Cultured leather may be incorporated into a variety of products. In comparison with conventional leather, cultured leather is produced in vitro, which involves manufacturing the cultured leather in a laboratory or other controlled environment without growing in living organisms or harvesting from the living organisms. Examples of products that may incorporate cultured leather include footwear, apparel, athletic equipment, furniture, bags, or any other consumer or industrial product that commonly incorporates conventional leather or synthetic leather.

The advantages and features of novelty characterizing aspects of the invention are pointed out with particularity in the appended claims. To gain an improved understanding of the advantages and features of novelty, however, reference may be made to the following descriptive matter and accompanying figures that describe and illustrate various configurations and concepts related to the invention.

FIGURE DESCRIPTIONS

The foregoing Summary and the following Detailed Description will be better understood when read in conjunction with the accompanying figures.

FIG. **1** is side elevational view of an article of footwear.

FIGS. **2**A and **2**B are cross-sectional views of the article of footwear, as respectively defined by section lines **2**A and **2**B in FIG. **1**.

FIG. **3** is a perspective view of an element of cultured leather.

FIG. **4** is a cross-sectional view of the element of cultured leather, as defined by section line **4-4** in FIG. **3**.

FIGS. **5**A-**5**F are perspective views corresponding with FIG. **3** and depicting further configurations of the element of cultured leather.

FIGS. **6**A-**6**M are cross-sectional views corresponding with FIG. **4** and depicting further configurations of the element of cultured leather.

FIG. **7** is a perspective view of a portion of an apparatus for producing the cultured leather.

FIG. **8** is a cross-sectional view of the portion of an apparatus for producing the cultured leather.

FIGS. **9**A-**9**C are schematic cross-sectional views corresponding with FIG. **8** and depict a method of producing the cultured leather.

FIGS. **10**A-**10**C are schematic cross-sectional views corresponding with FIG. **8** and depict another method of producing the cultured leather.

FIGS. **11**A-**11**C are schematic cross-sectional views corresponding with FIG. **8** and depict further configurations of the apparatus for producing the cultured leather.

FIG. **12** is a perspective view of a portion of the method of producing the cultured leather.

FIGS. **13**A-**13**F are perspective views of products incorporating the cultured leather.

DETAILED DESCRIPTION

The following discussion and accompanying figures disclose various products that incorporate cultured leather. Conventional leather is generally produced in vivo, which involves harvesting skins for the conventional leather from living organisms (e.g., alligator, buffalo, cow, crocodile, deer, elk, goat, kangaroo, lamb, ostrich, pig, snake, yak). In comparison, cultured leather is produced in vitro, which involves manufacturing the cultured leather in a laboratory or other controlled environment without growing in living organisms or harvesting from the living organisms. An advantage to in vitro leather production is that the cultured leather may be engineered and grown to exhibit particular properties, such as (a) uniform consistency and thickness, (b) enhanced strength, stretch, flexibility, breathability, and resistance to abrasion, (c) three-dimensional or shaped configurations, and (d) desired surface textures or other aesthetic characteristics. Moreover, the specific combination of properties selected for the cultured leather may not exist in conventional leathers from any individual living organism. Additional advantages of in vitro leather production relate to various environmental and animal rights issues. For example, animal husbandry practices (e.g., ranching, breeding) may utilize significant land and water resources and contribute to the production of waste products and greenhouse gasses, and the harvesting of skins for conventional

leather may be considered contrary to animal rights. Furthermore, the time required for producing cultured leather may be significantly shorter than the time required to raise an organism to a marketable size. Cultured leather also has advantages over synthetic leather (i.e., a polymer-based leather substitute), which is generally non-recyclable, petroleum-dependent, formed through a solvent-dependent process, and relatively slow to biodegrade. Accordingly, the production of cultured leather may allow particular properties to be engineered into the resulting product, while reducing impacts upon the environment and the living organisms from which conventional leather is harvested.

Footwear Configuration

An article of footwear **10** that incorporates cultured leather is depicted in FIG. **1** as having a general configuration of an athletic shoe. A variety of athletic shoe styles, in addition to footwear **10**, may incorporate cultured leather or concepts related to the cultured leather, including basketball shoes, cross-training shoes, cycling shoes, football shoes, golf shoes, running shoes, soccer shoes, tennis shoes, and walking shoes, for example. Cultured leather may also be utilized with a wide variety of further footwear styles, such as dress shoes, loafers, sandals, and boots. Moreover, the cultured leather may be incorporated into an array of other products, including apparel, athletic equipment, furniture, bags, or any other consumer or industrial product that commonly incorporates conventional leather or synthetic leather. Accordingly, cultured leather or concepts related to the cultured leather may be utilized with a variety of products.

Footwear **10** includes a sole structure **20** and an upper **30**. Sole structure **20** is secured to upper **30** and extends between the foot and the ground when footwear **10** is worn. The primary elements of sole structure **20** are a midsole **21** and an outsole **22**. Midsole **21** is secured to a lower surface of upper **30** and may be formed from a compressible polymer foam element (e.g., a polyurethane or ethylvinylacetate foam) that attenuates ground reaction forces (i.e., provides cushioning) when compressed between the foot and the ground during walking, running, or other ambulatory activities. In further configurations, midsole **21** may incorporate plates, moderators, fluid-filled chambers, lasting elements, or motion control members that further attenuate forces, enhance stability, or influence the motions of the foot, or midsole **21** may be primarily formed from a fluid-filled chamber. Outsole **22** is secured to a lower surface of midsole **21** and may be formed from a wear-resistant rubber material that is textured to impart traction. A sockliner **23** is also be located within upper **30** and positioned to extend under a lower surface of the foot. Although this configuration for sole structure **20** provides an example of a sole structure that may be used in connection with upper **30**, a variety of other conventional or nonconventional configurations for sole structure **20** may also be utilized. Accordingly, the features of sole structure **20** or any sole structure utilized with upper **30** may vary considerably.

Upper **30** defines a void within footwear **10** for receiving and securing a foot relative to sole structure **20**. The void is shaped to accommodate the foot and extends along the lateral side of the foot, along the medial side of the foot, over the foot, around the heel, and under the foot. Access to the void is provided by an ankle opening **31** located in at least a heel region of footwear **10**. A lace **32** extends through various lace apertures **33** or other lace-receiving elements (e.g., D-rings, hooks) in a throat area of upper **30** and permits the wearer to modify dimensions of upper **30** to accommodate the proportions of the foot. More particularly, lace **32** permits the wearer to tighten upper **30** around the foot, and lace **32** permits the wearer to loosen upper **30** to facilitate entry and removal of the foot from the void through ankle opening **31**. In addition, upper **30** includes a tongue **34** that extends between the interior void and lace **32**.

Upper **30** exhibits a layered configuration that includes an outer layer **35**, an intermediate layer **36**, and an inner layer **37**, as shown in FIGS. **2**A and **2**B. Outer layer **35** forms at least a portion of an outer surface of footwear **10**. Intermediate layer **36** is positioned between layers **35** and **37**. Additionally, inner layer **37** forms at least a portion of an inner surface that defines the void within upper **30** and contacts the foot or a sock worn over the foot. In some configurations, upper **30** may also incorporate a heel counter that limits heel movement in the heel region or a wear-resistant toe guard located in a forefoot region of footwear **10**. Upper **30** may also incorporate further elements that provide structural advantages or enhance the aesthetics of footwear **10**.

Layers **35-37** may be formed from one or more of a plurality of material elements that include cultured leather, synthetic leather, conventional leather, textile elements, polymer sheets, or polymer foam. As an example, outer layer **35** may be formed from cultured leather, intermediate layer **36** may be formed from polymer foam to provide protection or cushioning to the foot, and inner layer **37** may be formed from a textile element that absorbs moisture and enhances comfort. Forming outer layer **35** from cultured leather imparts many of the properties of conventional leather, including relatively high strength, resistance to abrasion, and aesthetic appeal. Moreover, forming outer layer **35** from cultured leather imparts one or more additional properties, as discussed above, including (a) uniform consistency and thickness, (b) enhanced strength, stretch, flexibility, breathability, and resistance to abrasion, (c) three-dimensional or shaped configurations, and (d) desired surface textures or other aesthetic characteristics. That is, forming outer layer **35** from cultured leather imparts the advantage of providing a desired combination of properties, which may be engineered into the cultured leather. Additionally, forming outer layer **35** from cultured leather reduces impacts upon the environment and the living organisms.

Although cultured leather may be utilized for outer layer **35**, cultured leather may also be utilized for either of intermediate layer **36** and inner layer **37**. Moreover, cultured leather may also be utilized for only a portion of outer layer **35**, with another material forming a remainder of outer layer **35**. In a further configuration of upper **30**, intermediate layer **36** may be absent, in which case the cultured leather of outer layer **35** may be utilized with a textile material of inner layer **37**, for example, or both of layers **35** and **37** may be formed from elements of the cultured leather. Similarly, both of layers **36** and **37** may be absent such that the cultured leather of outer layer **35** forms both the exterior and interior surfaces of upper **30**. In another configuration, the cultured leather of outer layer **35** may define apertures that expose areas of intermediate layer **36**. Accordingly, the cultured leather may be incorporated into a variety of configurations of upper **30**, and the cultured leather may be incorporated into upper **30** in a variety of locations.

Cultured Leather Configuration

An element of cultured leather **40** is depicted in FIGS. **3** and **4** as having the general appearance and properties of conventional leather, such as conventional cowhide leather (e.g., leather produced in vivo and harvested from a cow). As such, cultured leather **40** exhibits relatively high strength, resistance to abrasion, and aesthetic appeal. Cultured leather

40 has a first surface 41 and an opposite second surface 42. Whereas first surface 41 has a finished and grained appearance, second surface 42 may be rougher and less finished. When incorporated into footwear 10 (e.g., as outer layer 35) or other products, first surface 41 generally faces outward. Additionally, cultured leather 40 has a layered or stratified configuration that includes a first stratum 43, a second stratum 44, and a third stratum 45. In conventional leather, for example, (a) the upper section or stratum is called the grain, which is the external dermal portion that grew hair, (b) the center section or stratum is termed the corium, and (c) the lower section or stratum is termed the flesh side. First stratum 43 forms first surface 41 and exhibits many properties of the grain from conventional leather. Second stratum 44 is positioned between strata 43 and 45 and exhibits many properties of the corium from conventional leather. Additionally, third stratum 45 forms second surface 42 and exhibits many properties of the flesh side from conventional leather. Accordingly, cultured leather 40 may exhibit many of the features and properties of conventional leather.

The configuration of cultured leather 40 discussed above incorporates many of the features and properties of conventional leather. That is, cultured leather 40 may be substantially identical to conventional leather in appearance, strength, and resistance to abrasion, for example. Moreover, consumers (e.g., wearers of footwear 10) may perceive no difference between cultured leather 40 and conventional leather. As such, cultured leather 40 may be utilized to replace conventional leather in many products, including footwear 10, apparel, athletic equipment, furniture, handbags or any other consumer or industrial product that commonly incorporates conventional leather. In contrast with conventional leather, however, cultured leather 40 is produced in vitro, which involves manufacturing the cultured leather in a laboratory or other controlled environment without growing in living organisms or harvesting from the living organisms. Additionally, producing cultured leather 40 in vitro reduces impacts upon the environment and living organisms. Accordingly, cultured leather 40 may have advantages over conventional leather even when cultured leather 40 is substantially identical to conventional leather.

Further Cultured Leather Configurations

Although cultured leather 40 may be substantially identical to conventional leather, cultured leather 40 may be produced in a manner that allows a combination of properties to be engineered into the resulting product. For example, cultured leather 40 may be engineered and grown in vitro to exhibit particular properties, such as (a) uniform consistency and thickness, (b) enhanced strength, stretch, flexibility, breathability, and resistance to abrasion, (c) three-dimensional or shaped configurations, and (d) desired surface textures or other aesthetic characteristics. That is, a desired combination of properties may be engineered into the structure of cultured leather 40 through in vitro production. Moreover, this desired combination of properties may enhance cultured leather 40 when compared to conventional leather.

Cultured leather 40 is discussed above as having the general appearance and properties of conventional leather, such as conventional cowhide leather. When producing cultured leather 40 though an in vitro process, dermal cells from a cow may be utilized. More particularly, dermal cells from a cow may be grown in vitro to form tissue that resembles conventional cowhide leather. In order to vary the properties of cultured leather 40, however, (a) in vitro production techniques may be varied, (b) genetically-modified dermal cells may be incorporated into cultured leather 40, (c) cells with genetic material from at least two organisms (e.g., transgenic cells) may be incorporated into cultured leather 40, (d) cells from other organisms (e.g., alligator, buffalo, crocodile, deer, elk, goat, kangaroo, lamb, ostrich, pig, snake, yak) may be utilized, (e) keratins or chitins may be bioengineered into cultured leather 40, or (f) plant, fungal, or bacterial DNA may be incorporated into the cells forming cultured leather 40. That is, cultured leather 40 may have the general appearance and properties of conventional leather, but may be formed through a variety of techniques or from a variety of cells.

Although cultured leather 40 may resemble conventional leather, the overall appearance of cultured leather 40 (e.g., the texture or grain in first surface 41) may vary. As an example, first surface 41 of cultured leather 40 exhibits a texture similar to alligator or crocodile skin in FIG. 5A. A configuration wherein first surface 41 exhibits a dimpled texture similar to pig skin is depicted in FIG. 5B, and a similar texture with more pronounced dimpling is depicted in FIG. 5C. Similarly, first surface 41 may also impart the appearance of conventional leather from buffalo, deer, elk, goat, kangaroo, lamb, ostrich, snake, or yak, for example. Although first surface 41 may exhibit a texture similar to various types of conventional leather, first surface 41 may also exhibit a texture that does not generally occur in nature, as in FIG. 5D. Moreover, first surface 41 may be generally smooth or untextured, as in FIG. 5E. Although the properties of cultured leather 40 may be similar to conventional cowhide leather even when first surface 41 imparts the appearance of other organisms, the properties of cultured leather 40 may also vary depending upon the specific in vitro production techniques or dermal cells that are utilized. That is, the properties of cultured leather 40, as well as the appearance, may vary significantly.

Referring to the configuration of FIGS. 3 and 4, first surface 41 has a finished and grained appearance, whereas second surface 42 is rougher and less finished. In contrast, FIG. 5F depicts a configuration wherein both surfaces 41 and 42 have a finished and grained appearance. Unlike conventional leather, therefore, the flesh side is absent and replaced with a section or stratum similar to the grain. An advantage to forming both surfaces 41 and 42 to have a finished and grained appearance is that cultured leather 40 may be utilized in applications where both surfaces 41 and 42 are exposed. Additionally, the use of grain-type strata for both of surfaces 41 and 42 may enhance the resistance to abrasion in cultured leather 40.

Cultured leather 40, as discussed above, may be formed through a variety of in vitro production techniques or from various types of dermal cells. Another manner of varying the properties of cultured leather 40 relates to the overall structure of cultured leather 40. As an example, the number of strata (i.e., strata 43-45) may be varied. Referring to FIG. 6A, for example, cultured leather 40 has a configuration wherein only first stratum 43 is present. A configuration wherein only strata 43 and 44 are present is depicted in FIG. 6B. Additionally, a configuration wherein a fourth stratum 46 is present is depicted in FIG. 6C. Each of the grain, corium, and flesh side, for example, impart different properties to conventional leather. By varying the number of strata (i.e., strata 43-46) and the composition of the strata (e.g., grain, corium, flesh side), a variety of different properties may be incorporated into cultured leather 40. Moreover, in vitro production techniques may permit the formation of other types of strata with properties that are different

than the properties of the grain, corium, and flesh side, thereby permitting even greater variation in the properties of cultured leather **40**.

A further manner of varying the properties of cultured leather **40** relates to the thickness of cultured leather **40**. Referring to FIG. **6**D, first stratum **43** exhibits greater thickness than strata **44** and **45**. In this configuration, the properties of first stratum **43** may predominate due to the greater thickness of first stratum **43**. Cultured leather **40** may also exhibit a varying thickness, as in a tapered configuration depicted in FIG. **6**E and an undulating configuration depicted in FIG. **6**F. As a further possibility, FIG. **6**G depicts a configuration wherein first stratum **43** includes a pair of regions **47** and **48**. Each of regions **47** and **48** may impart different properties to different areas of cultured leather **40**.

Another manner of varying the properties of cultured leather **40** relates to the addition or further elements to cultured leather **40**. As an example, FIG. **6**H depicts a configuration wherein fibers of collagen **51** extend throughout each of strata **43-45**. Collagen is a naturally-occurring protein and forms connective tissue between cells. By increasing the presence of collagen **51**, the overall strength, as well as other properties, of cultured leather **40** may increase. As another example, a reinforcing structure **52** extends across cultured leather **40** in FIG. **6**I. Reinforcing structure **52** is embedded within cultured leather **40** and may be placed during in vitro production such that the cells forming cultured leather **40** grow to surround reinforcing structure **52**. In this manner, reinforcing structure **52** may be a scaffold upon which cultured leather **40** is produced. In addition to adding strength, reinforcing structure **52** may add stiffness, for example. Another configuration wherein a plurality of spherical members **53** extend through cultured leather **40** is depicted in FIG. **6**J. Spherical members **53** may, for example, be hollow balls that reduce the density of cultured leather **40**. Referring to FIG. **6**K, cultured leather **40** forms a plurality of apertures **49**, which may be pores, that extend through each of strata **43-45**. In addition to decreasing the mass of cultured leather **40**, apertures **49** may increase the permeability of air and water. In footwear **10**, for example, moisture produced from the foot may escape upper **30** my passing through apertures **49**.

Although cultured leather **40** may exhibit a generally planar configuration, cultured leather **40** may also be produced to have three-dimensional or otherwise non-planar configurations. More particularly, cultured leather **40** may be grown on shaped scaffolds that impart a predetermined shape during in vitro production. In FIGS. **6**E and **6**F, for example, the thickness of cultured leather **40** varies to impart a three-dimensional aspect. Referring to FIG. **6**L, cultured leather **40** has a generally curved aspect, which may be utilized against curved surfaces. In the forefoot area of footwear **10**, for example, layers **35-37** wrap around the foot and over the forward area of the toes. Cultured leather **40** may be produced to exhibit this type of curvature, thereby reducing manufacturing steps in the assembly of footwear **10** that require shaping of conventional leather. In another configuration, depicted in FIG. **6**M, cultured leather forms a circular or tubular structure that may be utilized for golf club grips and around steering wheels, for example.

Based upon the above discussion, cultured leather **40** may exhibit a variety of configurations with different properties. Although cultured leather **40** may be similar to conventional leather, variations in the structure of cultured leather **40** may produce configurations that differ significantly from conventional leather. In addition to textures associated with surfaces **41** and **42**, variations in strata **43-45** may provide various combinations of properties. Moreover, the addition of further elements to cultured leather **40** (e.g., collagen **51**, reinforcing structure **52**, spherical members **53**) may impart further variations. Accordingly, cultured leather **40** may exhibit a variety of properties, which at least partially depend upon the overall structure and configuration of cultured leather **40**.

In Vitro Production

Cultured leather **40** is produced in vitro, which involves manufacturing in a laboratory or other controlled environment without growing in living organisms or harvesting from the living organisms. A variety of conventional techniques may be utilized to produce cultured leather **40**. In general, each of the techniques involves placing tissue that grows to form cultured leather **40** on a culture medium, which provides water and nutrients. The techniques may also involve providing a suitable mixture of oxygen and carbon dioxide, as well as other gasses, to the tissue during growth.

Examples of conventional techniques for in vitro production include the plasma clot method, raft method, agar gel method, and grid method. The plasma clot method involves growing tissue on the surface of a culture medium that includes chick (i.e., infant chicken) plasma and chick embryo extract. The raft method includes placing tissue on a raft of lens paper or rayon acetate, which is floated on a culture medium. The agar gel method includes placing tissue upon a culture medium that is gelled with one-percent agar and includes a suitable salt solution, serum, and a mixture of amino acids and vitamins. Additionally, the grid method involves placing tissue upon a wire mesh or perforated stainless steel sheet that is located at a surface of the culture medium. As further examples, various techniques and apparatuses for in vitro production are disclosed in U.S. Pat. No. 7,419,819 to Nishimoto, et al.; U.S. Pat. No. 7,435,594 to Gong, et al. U.S. Pat. No. 7,504,258 to McAllister, et al. U.S. Pat. No. 7,547,540 to Takagi, et al. U.S. Pat. No. 7,723,105 to Bordoni, et al.; U.S. Pat. No. 7,598,076 to Wedell, et al.; U.S. Pat. No. 7,635,575 to Scherze, et al.; U.S. Pat. No. 7,666,416 to Etcheverry, et al.; U.S. Pat. No. 7,691,625 to Kuwabara, et al.; U.S. Pat. No. 7,691,626 to McCabe, et al.; U.S. Pat. No. 7,732,204 to Donahue; U.S. Pat. No. 7,745,209 to Martin, et al.; and U.S. Pat. No. 7,754,478 to Suzuki, et al., each of which is incorporated herein by reference.

A portion of an apparatus **60** for producing cultured leather **40** is depicted in FIGS. **7** and **8**. Apparatus **60** includes a container **61** and a culture medium **62**. Container **61** includes sides and a bottom that define an interior area. Although depicted as square, container **61** may exhibit a variety of shapes that are suitable for producing cultured leather. Culture medium **62** is located within the interior area of container **61** and may be any conventional or non-conventional culture medium that facilitates in vitro production of cultured leather **40**. Although not depicted, apparatus **60** may also include a variety of other elements that promote the production of cultured leather **40**, including (a) devices for controlling temperature, humidity, and gas composition in the area of container **61**, (b) pH monitors, (c) a microscope for observing tissue growth, and (d) a lid or other protective cover element that extends over an upper area of container **61**, for example.

An example of a method for the in vitro production of cultured leather **40** is depicted in FIGS. **9**A-**9**C. Referring to FIG. **9**A, various explants **63** are placed upon a surface of culture medium **62**. Explants **63** are isolated dermal cells or pieces of dermal tissue. Nutrients and water from culture medium **62**, as well as oxygen from the air surrounding

explants **63**, are then absorbed by explants **63** to promote growth. Additionally, elements of apparatus **60** may control the temperature, humidity, and gas composition around explants **63** to further promote growth. Cells within explants **63** may then divide to form a tissue layer **64** over a portion of the surface of culture medium **62**, as depicted in FIG. **9**B. Following further cell division, differentiation of the cells may occur to form the various strata **43-45**, as depicted in FIG. **9**C, and substantially form the structure of cultured leather **40**. Additional tanning steps may then be performed to prevent deterioration of cultured leather **40**. Moreover, cultured leather **40** may then be incorporated into footwear **10** or other products.

Another example of a method for the in vitro production of cultured leather **40** is depicted in FIGS. **10**A-**10**C. Referring to FIG. **10**A, a solution **65** containing dermal cells may be sprayed or otherwise deposited upon the surface of culture medium **62** from one or more nozzles **66**. Although the configuration of nozzles **66** may vary considerably, digital cell cartridges (e.g., similar to ink cartridges of ink printers) may be utilized to disperse the cells. Once applied, the cells within solution **65** may divide to form tissue layer **64** over a portion of the surface of culture medium **62**, as depicted in FIG. **10**B. Following further cell division, differentiation of the cells may occur to form the various strata **43-45**, as depicted in FIG. **10**C, and substantially form the structure of cultured leather **40**. An advantage to this process, is that various solutions (similar to solution **65**) may be deposited at different stages of the method to induce specific strata to form within cultured leather **40**. Moreover, the types of cells, nutrients, hormones, and chemicals that are deposited at the different stages of the process may vary to induce variations in the resulting configuration of cultured leather **40**. In a similar process, a slurry (e.g., an aqueous solution including dermal cells) may be poured onto the surface of culture medium **65**.

A variety of further methods for the in vitro production of cultured leather **40** may be utilized. Depending upon the properties of culture medium **62**, rafts or grids may be utilized to support explants **63**, tissue layer **64**, or the resulting cultured leather **40**. Referring to FIG. **11**A, tissue layer **64** is depicted as resting upon a support **67** within culture medium **62**. A similar configuration may be utilized to locate reinforcing structure **52** (e.g., as from FIG. **6**I) during the in vitro production, as depicted in FIG. **11**B. Additionally, contouring of culture medium **62** may be utilized to form a corresponding shaped, three-dimensional, or non-planar structure to cultured leather **40**, as depicted in FIG. **11**C. As an alternative, support **67** or similar structures may be contoured to impart a contoured shape to cultured leather **40**. Accordingly, a variety of variations upon apparatus **60** may be utilized for different production methods or resulting configurations of cultured leather **40**.

Following the in vitro production of cultured leather **40** through any of the general processes discussed above or another process, cultured leather **40** may be removed from apparatus **60** and incorporated into footwear **10**, as depicted in FIG. **12**. Although tanning or other preservation processes may be utilized, some methods for the in vitro production of cultured leather **40** may incorporate preservation processes. For example, modifications that affect the processing of cultured leather may be made through genetic engineering, which change the structure of proteins. As another example, final stages of in vitro production may involve triggering a bioengineered cellular compound (e.g., tannin) that fixes or stabilizes cultured leather **40**, thereby effectively tanning or preserving cultured leather **40** without the need for additional tanning steps. Either of these examples may allow tanning and processing to occur with less environmental impact than a conventional tanning process (e.g., a reduction in the number and quantity of chemicals used in a conventional tanning process).

Based upon the above discussion, various methods and apparatuses may be utilized for the in vitro production of cultured leather **40**. In general, however, cultured leather **40** is produced without growing in living organisms or harvesting from the living organisms, which may allow particular properties to be engineered into the resulting product, while reducing impacts upon the environment and the living organisms from which conventional leather is harvested.

Further Products

In addition to footwear **10**, cultured leather **40** may be incorporated into an array of other products, including apparel, athletic equipment, furniture, bags, or any other consumer or industrial product that commonly incorporates conventional leather or synthetic leather. As examples of apparel, FIG. **13**A depicts a jacket **71** that incorporates cultured leather **40**, and FIG. **13**B depicts a glove **72** that incorporates cultured leather **40**. As examples of athletic equipment, FIG. **13**C depicts a ball **73** that incorporates cultured leather **40**, and FIG. **13**D depicts a ball glove **74** that incorporates cultured leather **40**. As an example of furniture, FIG. **13**E depicts a recliner or chair **75** that incorporates cultured leather **40**. Additionally, a bag **76** that incorporates cultured leather **40** is depicted in FIG. **13**F. Other examples of bags that may incorporate cultured leather **40** include backpacks, messenger bags, luggage, handbags, and purses. Accordingly, a variety of products, as well as footwear **10**, may incorporate cultured leather **40**.

The invention is disclosed above and in the accompanying figures with reference to a variety of configurations. The purpose served by the disclosure, however, is to provide an example of the various features and concepts related to the invention, not to limit the scope of the invention. One skilled in the relevant art will recognize that numerous variations and modifications may be made to the configurations described above without departing from the scope of the present invention, as defined by the appended claims.

The invention claimed is:

1. A product incorporating cultured leather comprising a reinforcing structure incorporated into the structure of the cultured leather so that the reinforcing structure is embedded within and completely surrounded by the cultured leather such that the reinforcing structure is in a fixed position relative to the cultured leather, wherein the reinforcing structure adds stiffness to the cultured leather,

wherein the cultured leather comprises a first stratum and a second stratum having different properties from the first stratum, wherein the first stratum is in direct contact with the second stratum, and wherein the reinforcing structure extends into both the first stratum and the second stratum, and

wherein the reinforcing structure has (a) a first portion embedded entirely within the second stratum such that the first portion of the reinforcing structure is parallel to both a first surface and a second surface of the second stratum, (b) a second portion that is perpendicular to the first portion of the reinforcing structure, wherein the second portion of the reinforcing structure is continuous with and extends from the first portion through both the first stratum and the second stratum, and (c) a third portion that is perpendicular to the first portion of the reinforcing structure, wherein the third portion is con-

tinuous with and extends from the first portion through both the first stratum and the second stratum.

2. The product recited in claim **1**, further comprising a third stratum positioned to sandwich the second stratum between the first stratum and the third stratum,

wherein the second portion of the reinforcing structure extends from the first stratum, through the second stratum, and into the third stratum so that the second portion is entirely surrounded by the first stratum, the second stratum, and the third stratum, and

wherein the third portion of the reinforcing structure extends from the first stratum, through the second stratum, and into the third stratum so that the third portion is entirely surrounded by the first stratum, the second stratum, and the third stratum.

3. The product recited in claim **1**, wherein the cultured leather has a first region and a second region, wherein the reinforcing structure is embedded in the first region, thereby adding strength and stiffness to the first region such that the first region has greater strength and stiffness than the second region.

4. The product recited in claim **1**, wherein the cultured leather is grown around the reinforcing structure and the reinforcing structure imparts a stiffness differentiation in at least one axis of the cultured leather.

5. The product recited in claim **1**, wherein the reinforcing structure imparts a tensile strength differentiation in at least one axis of the cultured leather.

6. The product recited in claim **1**, wherein the product is an article of footwear.

7. The product recited in claim **1**, wherein the cultured leather has a curved aspect imparted as a predetermined shape during in vitro production that corresponds to a curvature present in the finished product.

8. The product recited in claim **1**, wherein the first stratum corresponds to one of an external dermal portion, a corium, and a flesh side portion of conventional leather and the second stratum corresponds to another of the external dermal portion, the corium, and the flesh side portion of conventional leather.

9. The product recited in claim **1**, wherein the first stratum has material properties of cowhide leather and the first stratum has a first surface that imparts the appearance of an organism other than a cow.

10. The product recited in claim **1**, wherein the first stratum comprises a first amount of collagen fibers and the second stratum comprises a second amount of collagen fibers.

11. A method for manufacturing a product, the method comprising:

forming leather through an in vitro process; and

incorporating the leather into the product;

wherein the product comprises a reinforcing structure incorporated into the structure of the cultured leather so that the reinforcing structure is embedded within and completely surrounded by the cultured leather such that the reinforcing structure is in a fixed position relative to the cultured leather, wherein the reinforcing structure adds stiffness to the cultured leather;

wherein the cultured leather comprises a first stratum and a second stratum having different properties from the first stratum, wherein the first stratum is in direct contact with the second stratum, and wherein the reinforcing structure extends into both the first stratum and the second stratum; and

wherein the reinforcing structure has (a) a first portion embedded entirely within the second stratum such that the first portion of the reinforcing structure is parallel to both a first surface and a second surface of the second stratum, (b) a second portion that is perpendicular to the first portion of the reinforcing structure, wherein the second portion of the reinforcing structure is continuous with and extends from the first portion through both the first stratum and the second stratum, and (c) a third portion that is perpendicular to the first portion of the reinforcing structure, wherein the third portion is continuous with and extends from the first portion through both the first stratum and the second stratum.

12. The method recited in claim **11**, wherein the product further comprises a third stratum positioned to sandwich the second stratum between the first stratum and the third stratum;

wherein the second portion of the reinforcing structure extends from the first stratum, through the second stratum, and into the third stratum so that the second portion is entirely surrounded by the first stratum, the second stratum, and the third stratum; and

wherein the third portion of the reinforcing structure extends from the first stratum, through the second stratum, and into the third stratum so that the third portion is entirely surrounded by the first stratum, the second stratum, and the third stratum.

13. The method recited in claim **11**, wherein the cultured leather has a first region and a second region, wherein the reinforcing structure is embedded in the first region, thereby adding strength and stiffness to the first region such that the first region has greater strength and stiffness than the second region.

14. The method recited in claim **11**, wherein the cultured leather is grown around the reinforcing structure and the reinforcing structure imparts a stiffness differentiation in at least one axis of the cultured leather.

15. The method recited in claim **11**, wherein the reinforcing structure imparts a tensile strength differentiation in at least one axis of the cultured leather.

16. The method recited in claim **11**, wherein the product is an article of footwear.

17. The method recited in claim **11**, wherein the step of forming leather includes spraying cells upon a growth medium.

18. The method recited in claim **11**, wherein the step of forming leather includes utilizing cells with genetic material from at least two organisms.

* * * * *