US00D725917S

(12) United States Design Patent

Yeung

(10) Patent No.: US D725,917 S

(45) Date of Patent: ** Apr. 7, 2015

(54) **DISPLAY STAND**

(71) Applicant: **Peter Yeung**, Redondo Beach, CA (US)

(72) Inventor: **Peter Yeung**, Redondo Beach, CA (US)

(**) Term: **14 Years**

(21) Appl. No.: **29/435,083**

(22) Filed: **Oct. 19, 2012**

(51) **LOC (10) Cl.** **06-07**

(52) **U.S. Cl.**
USPC **D6/310**; D6/300

(58) **Field of Classification Search**
CPC B26B 21/565; F21S 10/005; G02B 6/005; G09F 9/305
USPC D6/300–312; D21/348, 467, 406; D28/45, 44.1, 48; D24/146; 30/50, 30/527, 531; 362/551; D20/10
See application file for complete search history.

(56) **References Cited**

U.S. PATENT DOCUMENTS

2,593,304	A	*	4/1952	Howard	449/61
5,029,047	A	*	7/1991	Kachel	362/551
D324,912	S	*	3/1992	Hansen	D24/146
5,352,145	A	*	10/1994	Raiffe et al.	446/227
D394,678	S	*	5/1998	Espinoza	D21/406
D414,899	S	*	10/1999	Pinchuk	D28/48
D419,604	S	*	1/2000	Emmett	D20/10
D427,376	S	*	6/2000	Scott	D28/44.1
D512,795	S	*	12/2005	Carpenter	D28/45
2012/0192431	A9	*	8/2012	Wain	30/50
2013/0081289	A1	*	4/2013	Wain et al.	30/527
2013/0081291	A1	*	4/2013	Wain et al.	30/531

* cited by examiner

Primary Examiner — Cathron Brooks
Assistant Examiner — Teddy Falloway

(57) **CLAIM**

The ornamental design for a display stand, as shown and described.

DESCRIPTION

FIG. **1** is a front view of a display stand in accordance with the present design;
FIG. **2** is a back view thereof:
FIG. **3** is a top view thereof;
FIG. **4** is a bottom view thereof;
FIG. **5** is a left side view thereof;
FIG. **6** is a right side view thereof; and,
FIG. **7** is an elevated right side perspective view thereof.
The broken lines shown in the figure drawings are included for the purpose of illustrating portions of the display stand that form no part of the claimed design.

1 Claim, 5 Drawing Sheets

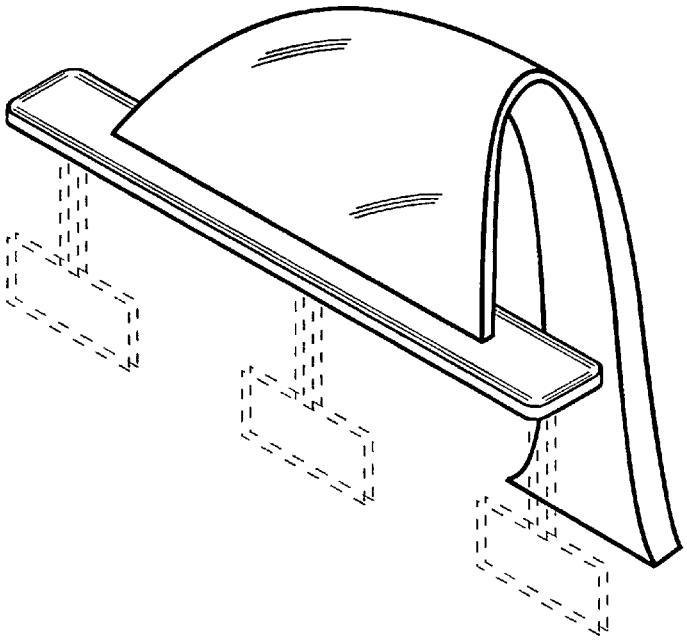

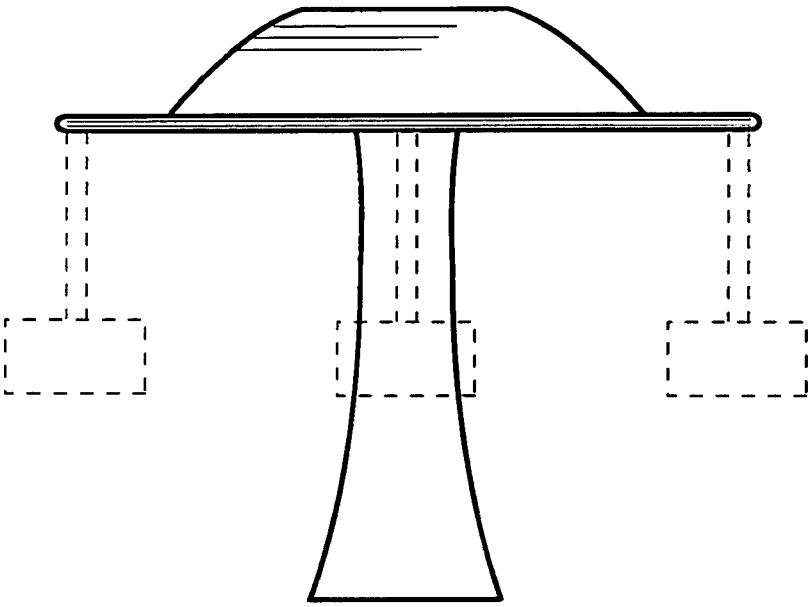

FIG. 1

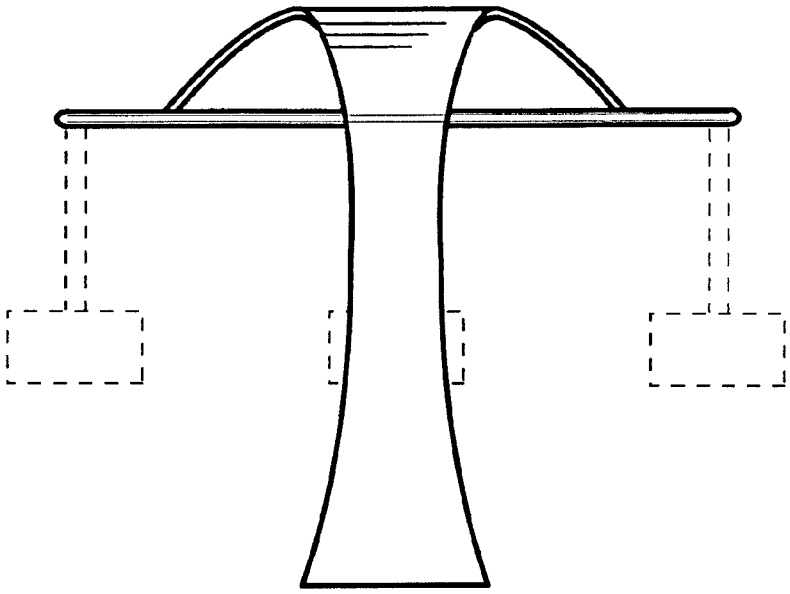

FIG. 2

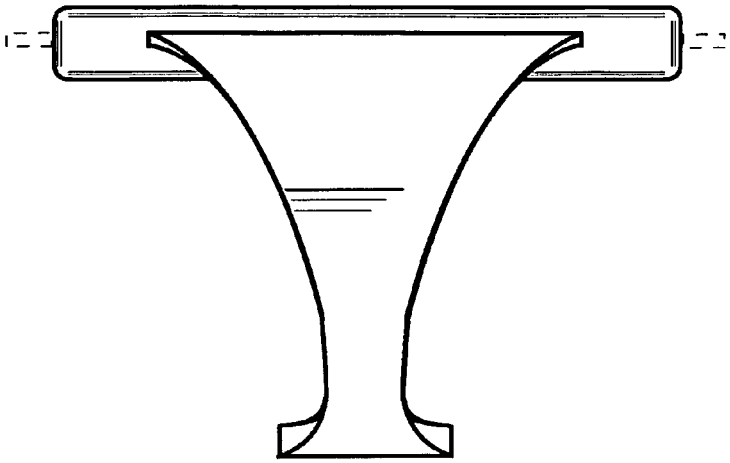

FIG. 3

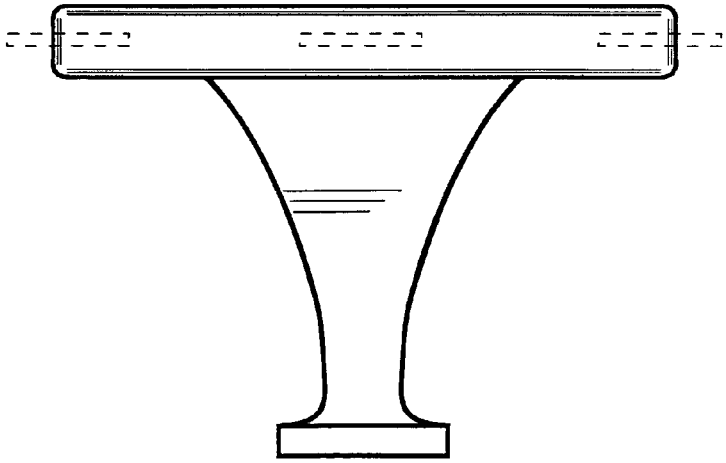

FIG. 4

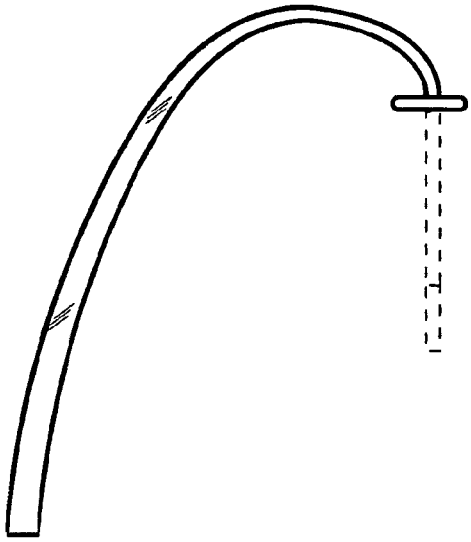

FIG. 5

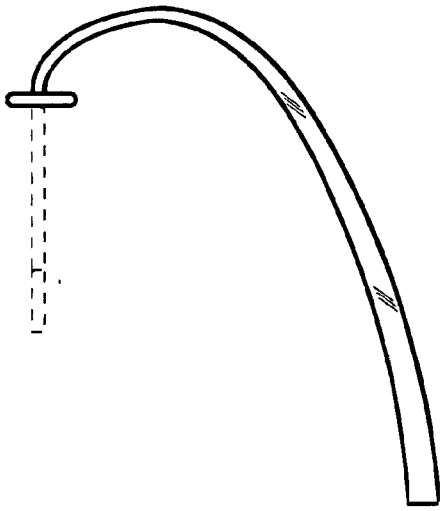

FIG. 6

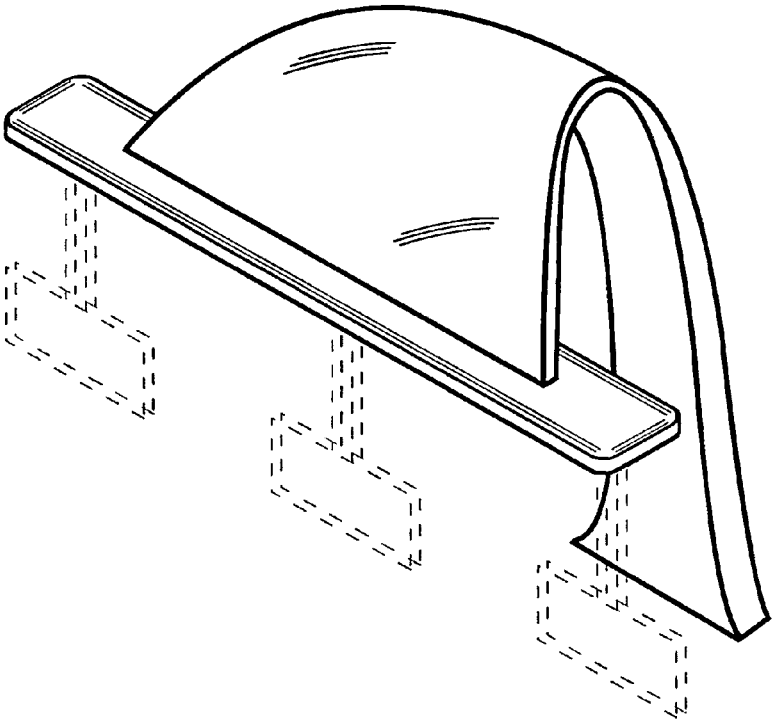

FIG 7