US009271416B2

(12) **United States Patent**
Carpenter

(10) **Patent No.: US 9,271,416 B2**
(45) **Date of Patent: Feb. 23, 2016**

(54) **CANOPY FOR PORTABLE ELECTRICAL DEVICE**

(71) Applicant: **GenTent Safety Canopies LLC**, Nottingham, NH (US)

(72) Inventor: **Mark A. Carpenter**, Nottingham, NH (US)

(73) Assignee: **GenTent Safety Canopies, LLC**, Nottingham, NH (US)

(*) Notice: Subject to any disclaimer, the term of this patent is extended or adjusted under 35 U.S.C. 154(b) by 0 days.

(21) Appl. No.: **14/600,191**

(22) Filed: **Jan. 20, 2015**

(65) **Prior Publication Data**

US 2015/0129009 A1 May 14, 2015

Related U.S. Application Data

(63) Continuation of application No. 13/593,881, filed on Aug. 24, 2012, now Pat. No. 8,997,769.

(60) Provisional application No. 61/528,168, filed on Aug. 27, 2011.

(51) **Int. Cl.**

E04H 15/02	(2006.01)
H05K 5/03	(2006.01)
F02B 63/04	(2006.01)

(52) **U.S. Cl.**

CPC ***H05K 5/03*** (2013.01); ***E04H 15/02*** (2013.01); ***F02B 63/048*** (2013.01); *F02B 63/04* (2013.01); *Y10S 135/905* (2013.01); *Y10T 29/49002* (2015.01)

(58) **Field of Classification Search**

CPC E04H 15/02; E04H 15/34; E04H 15/36; E04H 15/58; B65D 65/02; B65D 37/00; B65D 2585/86; F02B 63/04; F02B 63/044; F02B 63/048; F02B 2063/045; H02K 5/136; H02K 5/24; Y10T 29/49002

USPC ..... 135/93, 96, 124, 135, 117, 119, 120.1, 135/120.3, 161, 905; 150/154, 157, 165; 361/810, 816, 824; 290/1 A; 29/592.1

See application file for complete search history.

(56) **References Cited**

U.S. PATENT DOCUMENTS

1,264,078	A	*	4/1918	Jaureguy	135/126
2,917,094	A	*	12/1959	Sullivan	150/166
3,233,618	A	*	2/1966	Ferrier	108/42
3,525,290	A	*	8/1970	Pelsue	135/126
4,086,931	A	*	5/1978	Hall	135/98
4,285,354	A	*	8/1981	Beavers	135/135

(Continued)

OTHER PUBLICATIONS

NoOutage.com LLC, "Genshed GS7500", Oct. 9, 2012, [online][retrieved on Nov. 28, 2012]Retrieved from internet <URL: http://www.nooutage.com/genshed.htm>, 3 pages.

(Continued)

Primary Examiner — Winnie Yip
(74) *Attorney, Agent, or Firm* — Maine Cernota & Rardin

(57) **ABSTRACT**

A system and method are provided for the shielding of outdoor electrical equipment from inclement weather, the system comprising: a plurality of support brackets affixed to the outdoor electrical equipment; a support frame disposed in the support brackets; a waterproof cover disposed over the frame; an apron depending from the cover, configured to cover electrical connections on a side of the outdoor electrical equipment.

6 Claims, 10 Drawing Sheets

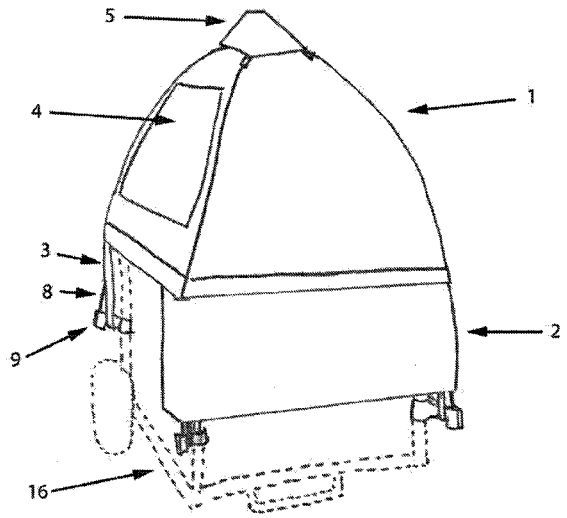

(56) **References Cited**

U.S. PATENT DOCUMENTS

6,376,951	B1 *	4/2002	Moore	310/89
6,430,954	B1 *	8/2002	Smith	62/259.1
6,516,823	B1 *	2/2003	Glover et al.	135/94
6,811,204	B2 *	11/2004	Long	296/102
7,152,733	B2 *	12/2006	Trickett	206/320
7,735,503	B2 *	6/2010	Jenkinson	135/96
7,819,151	B1 *	10/2010	Kuhn	150/154
8,069,871	B2 *	12/2011	Schneider	135/96
8,870,150	B2 *	10/2014	Wang	248/672
2010/0275962	A1 *	11/2010	Park et al.	135/122
2013/0074421	A1 *	3/2013	Wood et al.	52/3

OTHER PUBLICATIONS

Supergen Products, "Supergen Tent Reduce Generator Noise", [online][retrieved on Nov. 28, 2012]Retrieved from internet <URL: http://supergenproducts.com/gentent.html>, 3 pages.

GenDry, "GenDry", [online][retrieved on Nov. 28, 2012]Retrieved from internet <URL: http://www.gen-dry.com/>, 1 page.

* cited by examiner

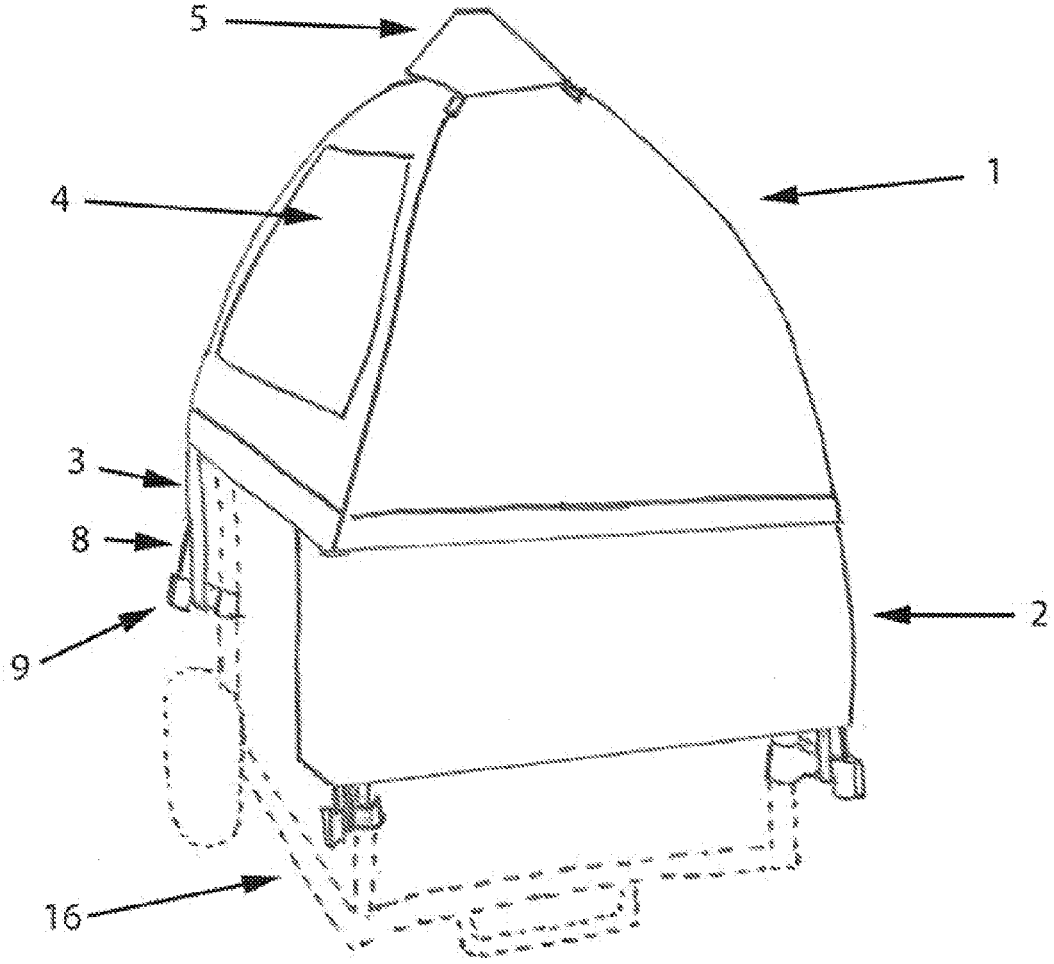

Fig. 1

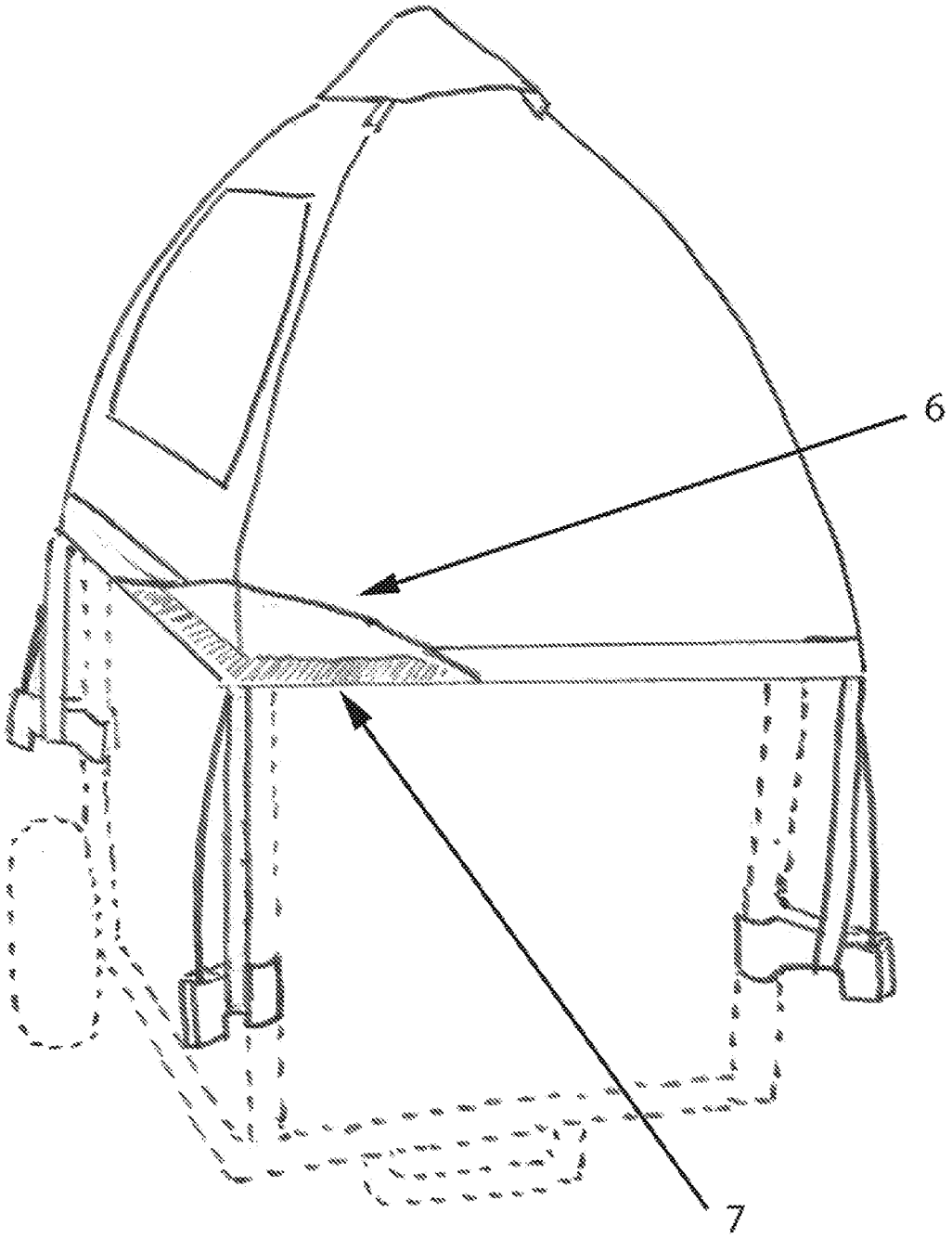

Fig. 2

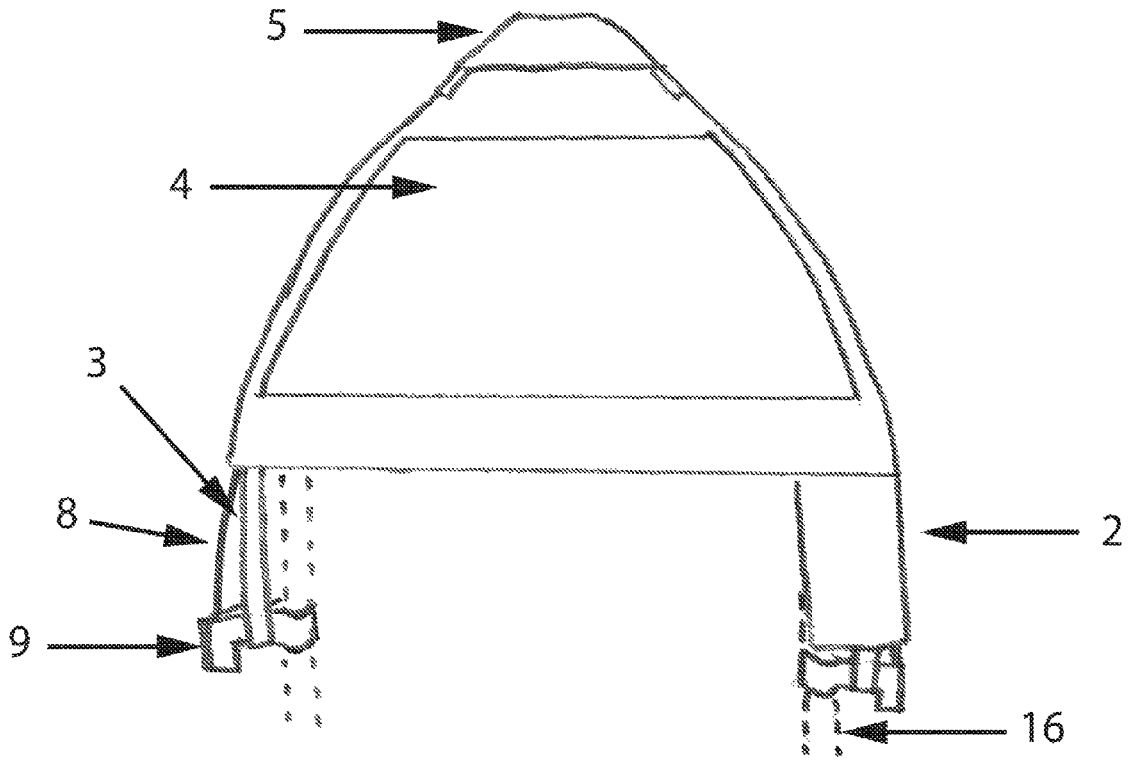

Fig. 3

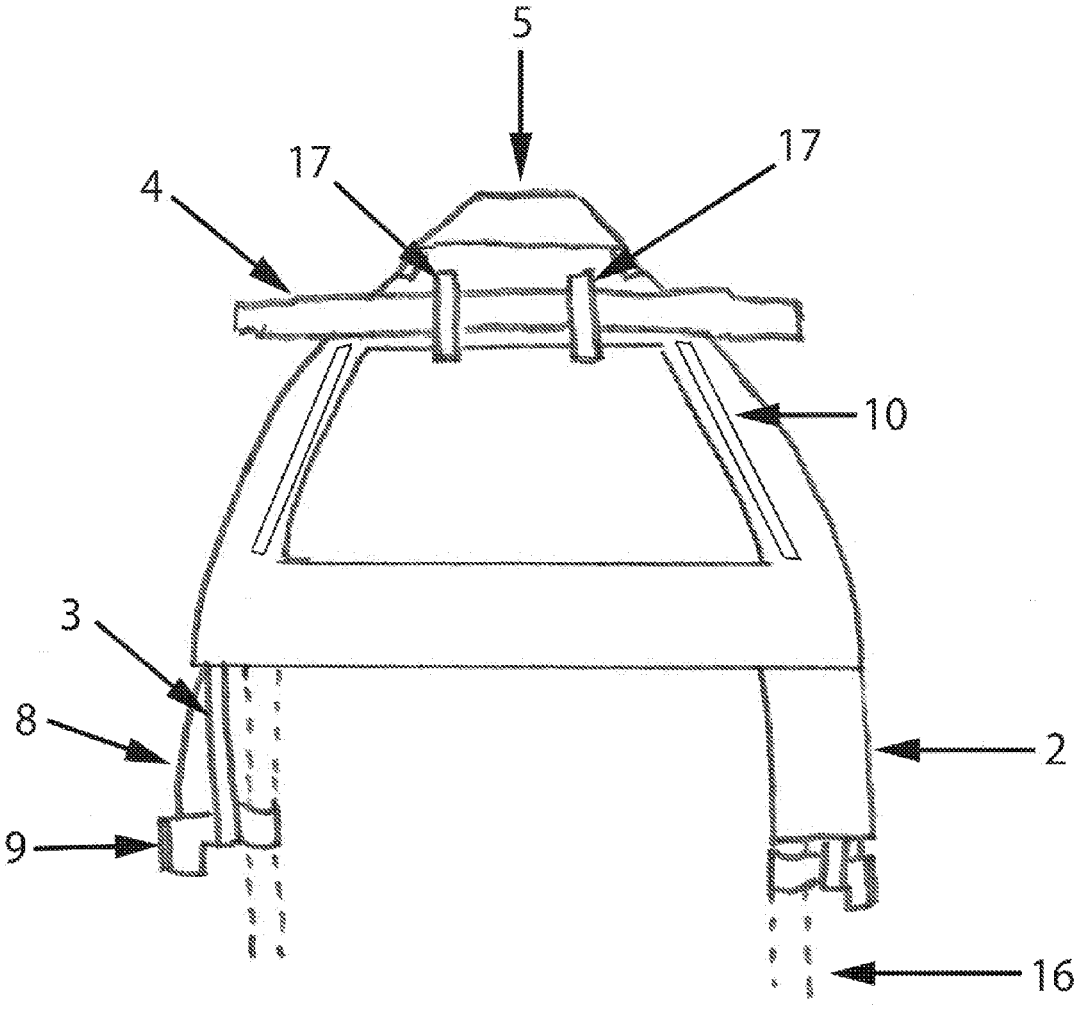

Fig. 4

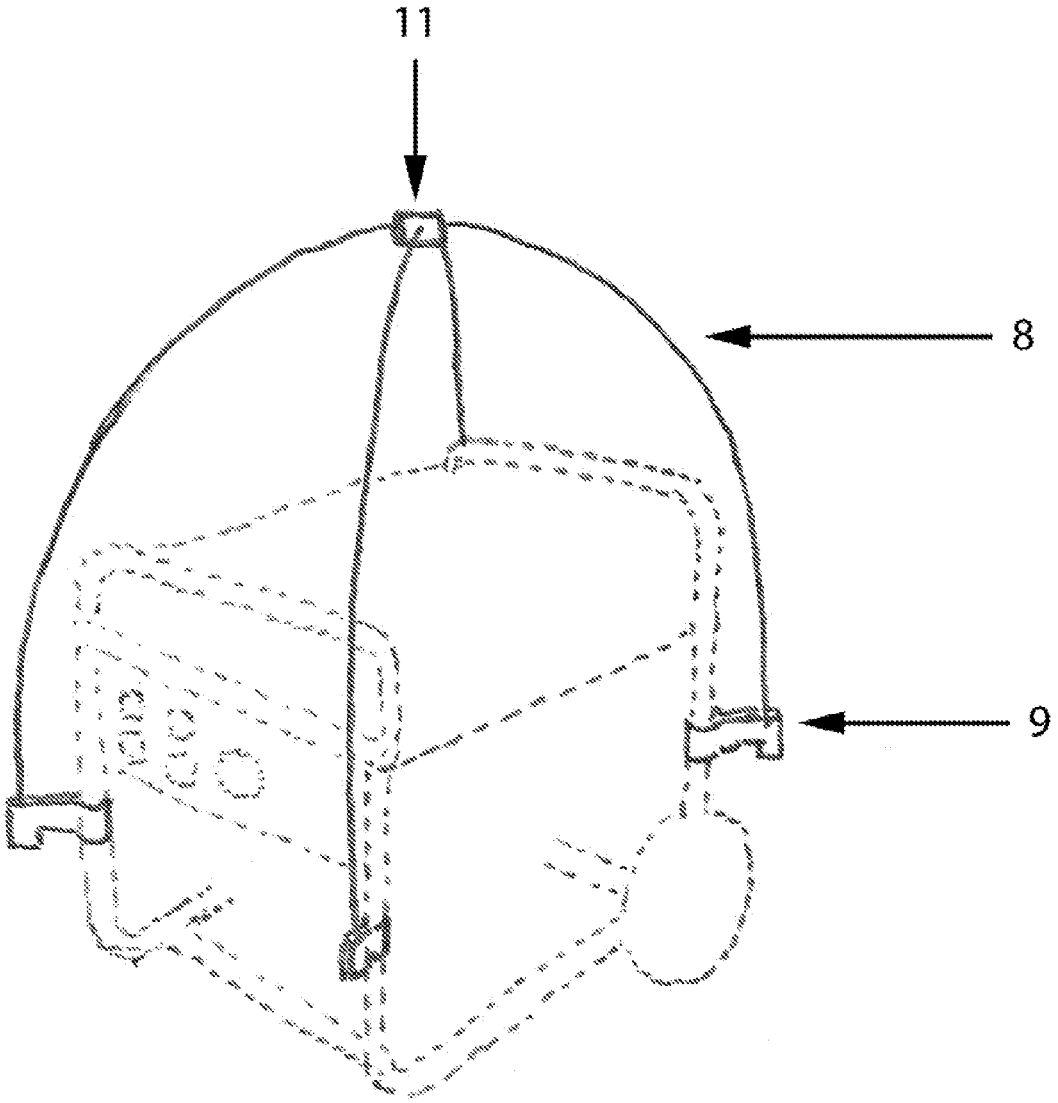

Fig. 5

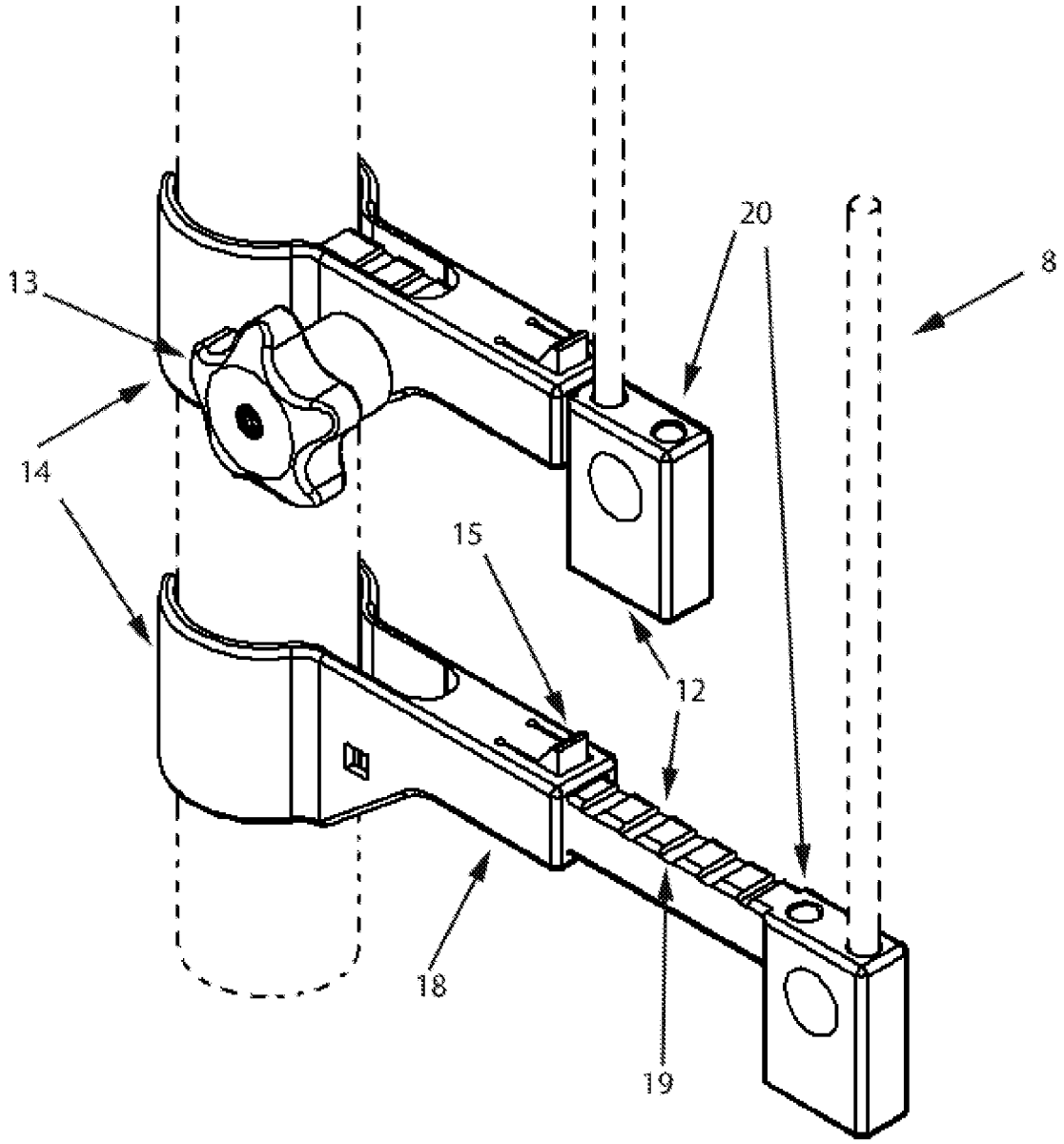

Fig. 6

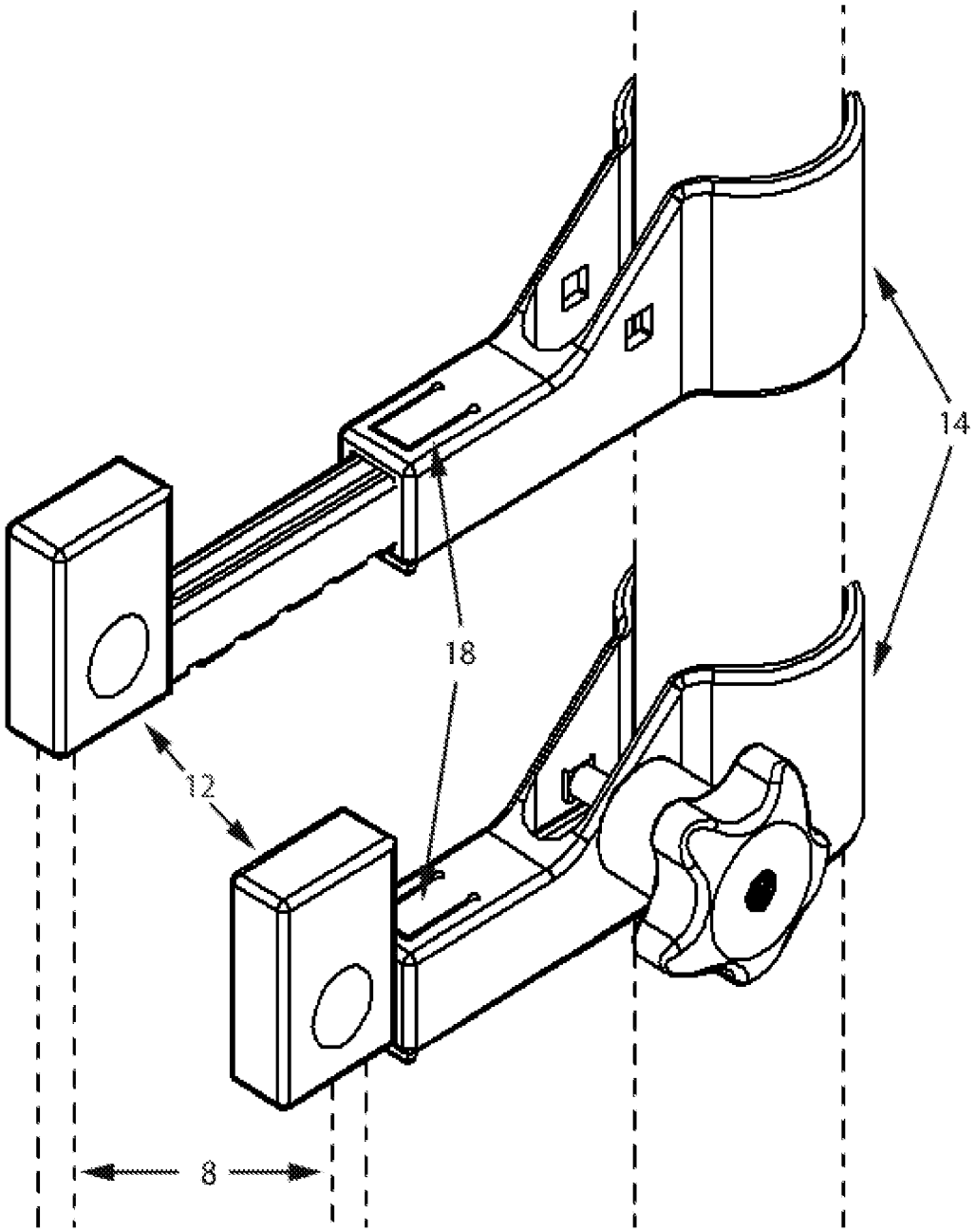

Fig. 7

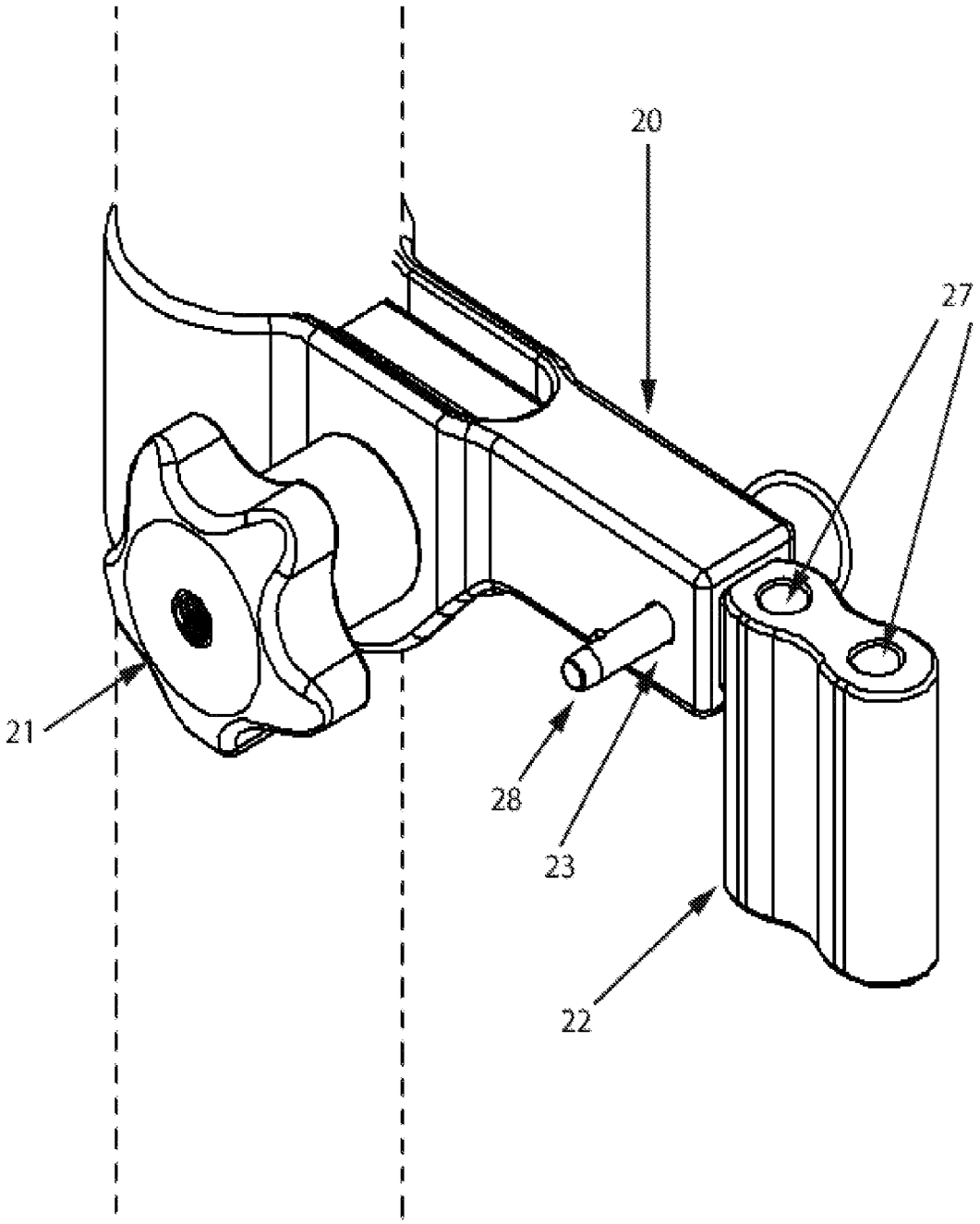

Fig. 8

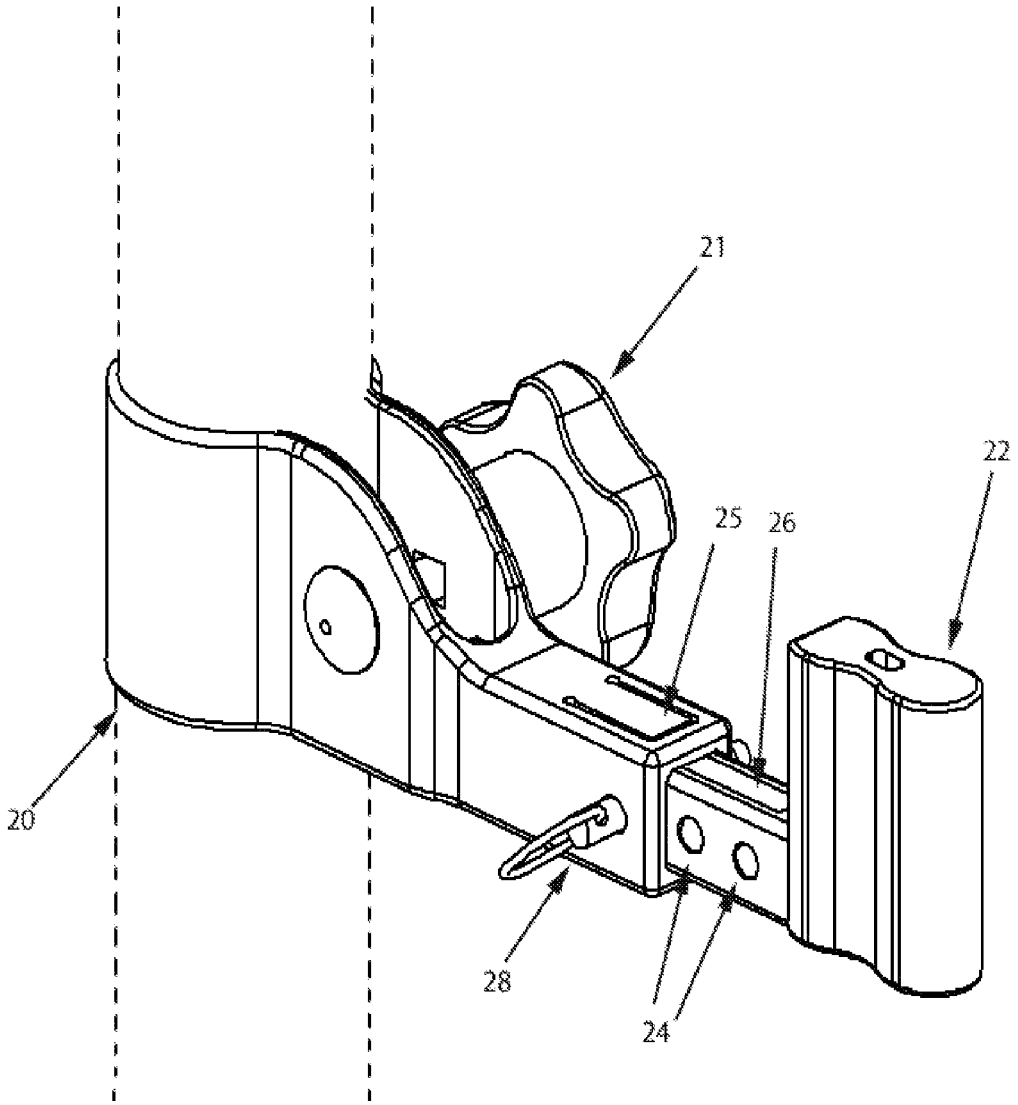

Fig. 9

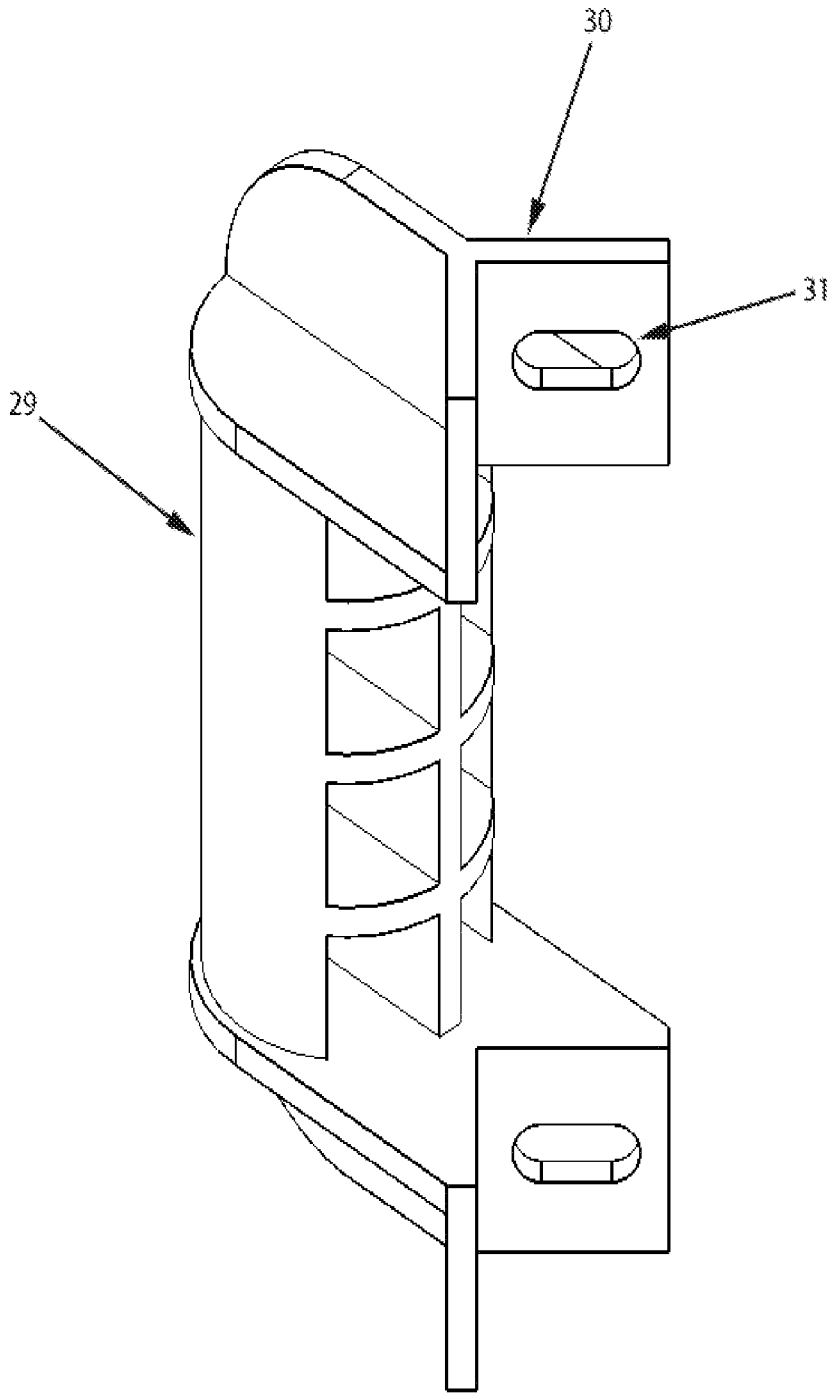

Fig. 10

CANOPY FOR PORTABLE ELECTRICAL DEVICE

CROSS-REFERENCE TO RELATED APPLICATIONS

This application is a continuation of U.S. Non-provisional application Ser. No. 13/593,881 filed on Aug. 24, 2012 which claims benefit of U.S. Provisional Application No. 61/528,168 filed on Aug. 27, 2011. Each of these applications is herein incorporated by reference in its entirety for all purposes.

FIELD OF THE INVENTION

The present invention is in the technical field of canopies. More particularly, the present invention is in the technical field of enclosures or covers for portable electrical devices which can be used while the portable electrical device is operating.

BACKGROUND OF THE INVENTION

Portable electrical generators are specifically to be used outdoor, with warning labels and instructions that warn against use too close to a dwelling, in garages, or other protected areas where poisonous gasses can accumulate and enter an occupied dwelling. Further, portable electrical generator manufacturers warn against operating a portable electrical generator in an enclosed shed or other small enclosure because these kinds of environments restrict air flow around and through the unit and pose an overheating hazard. Finally, portable electrical generators cannot be exposed to rain, sleet, snow or ice, since wet conditions pose a risk of shock and electrocution. Many times it is during times of precipitation that a portable electrical generator is needed, and regardless of manufacturer warnings, portable electrical generator users take the risk to operate them in garages, on or under porches and in other covered or enclosed areas that can allow deadly gasses to infiltrate a dwelling or cause overheating. Portable electrical generator accidents often occur during times of bad weather, when the generator is most needed.

Some manufacturers, in addition to the Consumer Product Safety Commission, suggest that a generator can be safely used outdoors in inclement weather when under a portable pop-up canopy. In practice, this is a fundamentally unsound approach. Portable pop-up canopies are difficult to anchor, especially in frozen conditions or on driveways, they provide no protection to precipitation that is blown in from an angular direction, they cannot withstand moderate winds without collapsing or being blown away, and they are susceptible to collapse under the weight of moderate snow and ice.

SUMMARY OF THE INVENTION

One embodiment of the present invention provides a system for the shielding of outdoor electrical equipment from inclement weather, the system comprising: a plurality of support brackets affixed to the outdoor electrical equipment; a support frame disposed in the support brackets; a waterproof cover disposed over the frame; an apron depending from the cover, configured to cover electrical connections on a side of the outdoor electrical equipment.

Another embodiment of the present invention provides such a system further comprising a covered vent disposed at an apex of the waterproof cover.

A further embodiment of the present invention provides such a system wherein the apron depends from hook and loop fasteners disposed beneath an edge of the waterproof cover.

Yet another embodiment of the present invention provides such a system wherein the apron exposes cooling surfaces of the outdoor electrical equipment.

A yet further embodiment of the present invention provides such a system wherein the waterproof cover further comprises a closable aperture through which a user may supply liquid fuel to the outdoor electrical equipment.

Even another embodiment of the present invention provides such a system wherein the waterproof cover further comprises at least one aperture.

One embodiment of the present invention provides a method for the deflection of water from portable electrical equipment, the method comprising: affixing a plurality of mounting brackets to a frame of the portable electrical equipment; inserting support rods into the brackets so as to create a support frame; extending a waterproof cover over the support frame while allowing ventilation of the portable electrical equipment.

Another embodiment of the present invention provides such a method wherein the portable electrical equipment comprises a portable electrical generator.

The features and advantages described herein are not all-inclusive and, in particular, many additional features and advantages will be apparent to one of ordinary skill in the art in view of the drawings, specification, and claims. Moreover, it should be noted that the language used in the specification has been principally selected for readability and instructional purposes, and not to limit the scope of the inventive subject matter.

BRIEF DESCRIPTION OF THE DRAWINGS

FIG. **1** is a perspective view of a portable electrical generator safety canopy of one embodiment of the present invention;

FIG. **2** is a perspective view of a portable electrical generator safety canopy of one embodiment of the present invention;

FIG. **3** is a side view of a portable electrical generator safety canopy of FIG. **1**;

FIG. **4** is a side view of a portable electrical generator safety canopy of FIG. **1**;

FIG. **5** is a perspective view of a portable electrical generator safety canopy supporting frame of one embodiment of the present invention;

FIG. **6** is a perspective view of a portable electrical generator safety canopy frame adjusting clamp of one embodiment of the present invention;

FIG. **7** is a perspective view of a portable electrical generator safety canopy frame adjusting clamp bottom section of one embodiment of the present invention;

FIG. **8** is a perspective view of an alternate portable electrical generator safety canopy frame adjusting clamp of one embodiment of the present invention;

FIG. **9** is a perspective view of an alternate portable electrical generator safety canopy frame adjusting clamp bottom section of one embodiment of the present invention;

FIG. **10** is a perspective view of a portable electrical generator safety canopy frame adapter of one embodiment of the present invention;

DETAILED DESCRIPTION OF THE INVENTION

Referring now to one embodiment of the invention in more detail, in FIG. **1** and FIG. **3** there is shown a portable electrical

generator safety canopy consisting of a main cover **1** which allows attachment of the electrical cover **2** and comprises an access door **4** and a vapor release cover **5**. The main cover **1** is shown secured to a frame rod **8** by a strap **3**. The frame rod **8** is secured to the portable electrical generator frame **16** by a tube connecting telescoping clamp **9**. One skilled in the art will appreciate that other outdoor portable electrical or internal combustion engine equipment may employ a canopy or cover configured in accord with the various embodiments of the present invention. Such outdoor equipment may include but is not limited to pumps, spotlights, air compressor, power washers, and heat pumps.

In further detail, referring to FIG. **1** and FIG. **2** there depicts an attachment of electrical cover **2** to the main cover **1** via a fastener section **7** that traverses the entire bottom edge of main cover **1** and employs a waterproofing cover flap **6**. The cover flap **6** is lifted up, which exposes the fastener section **7**, which secures the electrical cover **2**. The cover flap **6** is then dropped back over electrical cover **2** forming a waterproof covering.

Referring now to FIG. **4**, there is shown an open access door **4** which is secured into open position by securing door straps **17** to main cover **1**. Further, when returned to closed position, access door **4** is secured to main cover **1** by fastener **10**.

Referring now to FIG. **5**, there is shown a portable electrical generator safety canopy frame consisting of multiple frame rod sections **8** which are secured at the top central location by frame connector **11**. Further, each frame rod section **8** connects into a tube connecting telescoping clamp **9**.

Referring now to FIG. **6** and FIG. **7**, there is shown a tube connecting telescoping clamp consisting of a main clamp section **14** that is secured to a tube with thumb screw **13** and telescoping section **12**. Now in more detail, main clamp section **14** employs a thumb latch **15** which sets stop points for telescoping section **12** at predetermined interval locations. Further, main clamp section **14** employs a bottom latch **18** that allows insertion of telescoping section **12** and, once inserted, restricts telescoping section **12** from being removed. Now in more detail, telescoping section **12** employs notches **19** at predetermined interval locations which are formed in such a way that pushing the telescoping section **12** into main clamp section **14** does not require engaging the thumb latch **15**. Further, the notches **19** are formed in such a way that the thumb latch **15** on main clamp section **14** must be engaged in order to allow outward adjustment of the telescoping section **12**. Further, the telescoping section **12** provides holes **20**, each of which holds one frame rod section **8**.

Referring now to FIG. **8** and FIG. **9**, there is shown an alternative telescoping clamp system consisting of a main clamp section **20** that is secured to a tube with thumb screw **21** and telescoping section **22**. Now in more detail, main clamp section **20** employs a ring detent pin hole **23** and telescoping section **22** employs several ring detent pin holes **24** at predetermined interval locations. Further, the clamp system is adjusted to length by aligning a predetermined interval location ring detent pin hole in the telescoping section **22** with the ring detent pin hole **23** in the main clamp section **20** and inserting a ring detent pin **28**. Further, main clamp section **20** employs a bottom stop **25**. Telescoping section **22** employs a bottom groove **26**, and once inserted over the clamp section bottom stop **25**, removal is restricted during any upward or parallel forces. Further, the telescoping section **22** provides holes **27**, each of which holds one frame rod section **8**.

Referring now to FIG. **10**, there is shown a frame adapter consisting of a tubular section **29** combined with a corner section **30**. Further, the corner section **30** employs slotted holes **31** which accommodate attachment to a multitude of square tube frames and round tube frames. Now in more detail, the frame adapter provides a method to attach main clamp section **14** or main clamp section **20** in the event the portable electrical generator frame **16** cannot provide a mounting point for main clamp section **14** or main clamp section **20** because of square or rectangular frame shapes, or other portable electrical generator parts which may already be connected to frame **16**. Further, the frame adapter provides a method to increase, or extend, the effective length and width of the portable electrical generator frame **16**, as may be necessary for very small portable electrical generator frames. The frame adapter may be attached to the frame **16** through a multitude of methods including screws, bolts and nuts, welding and strapping.

In further detail, still referring to the invention of FIG. **1**, the main cover **1** is sufficiently wide at the bottom edges to cover portable electrical generator frames of the typical length up to 32 inches and typical width up to 22 inches. The tube connecting telescoping clamp allows sufficient adjustments to ensure a consistent portable electrical generator safety canopy frame size of approximately 24 inches wide and 35 inches in length. The portable electrical generator safety canopy frame is sufficiently sloped, from the center to each corner to assure water shedding action away from the underlying portable electrical generator.

In further detail, still referring to the invention of FIG. **1**, the main cover **1** can be increased or decreased in size to cover an effectively unlimited range of portable electrical generator frame sizes. By simply changing the length of the frame rods **8** and increasing the width and length of the main cover **1** at the bottom edges while keeping a consistent relative size for all other dimensions of main cover **1**, different portable electrical generator frame sizes are accommodated.

The construction details of the invention as shown in FIG. **1** through FIG. **10** are that the portable electrical generator safety canopy main cover **1** can be made of any material sufficiently waterproof and strong such as various fabrics, high strength plastic, molded fiberglass, metal and the like. Further the various components **2**, **4** and **5** can be made of similar materials, while the fastener sections **7** and **10** can be made using hook and loop, zipper or other methods that exhibit satisfactory waterproofing and secure closure characteristics. The portable electrical generator safety canopy frame, as depicted in FIG. **5** can be made of materials sufficiently strong and tensile to form the appropriate frame arc in order to allow shedding of water while maintaining strength enough to hold water, snow, and ice without breaking. The materials can be aluminum, steel, carbon fiber, wood and fiberglass formed into rods and tubes of either round, square or rectangular cross section shapes. The frame connector **11** can also be made of similar materials. The tube connecting telescoping clamp **12**, **14**, **20** and **22** and the frame adapter (FIG. **10**) can be made of materials sufficiently rigid and strong enough to not crack or fatigue and to hold the portable electrical generator safety canopy frame securely. The materials include wood, aluminum, steel and high strength plastics and the like.

The advantages of the present invention include, without limitation, that it is sufficiently waterproof and sheds precipitation, in any form, away from electrical sockets on portable electrical generators that could cause an electrocution hazard or disruption of power if they were to get wet. Further, the invention maintains, without disruption, sufficient normal airflow around the portable electrical generator that it will not overheat. Further, the invention is sufficiently strong to withstand storm winds with gusts up to Beaufort scale **10** and

accumulations of snow and ice. Further, the invention accommodates a wide range of portable electrical generators. Further, the invention allows convenient access to refueling, starting, stopping and connecting electrical wires to portable electrical generators. Further, this invention does not require modification of portable electrical generators. Further the invention is easily installed, removed and portable.

In broad embodiment, the present invention is a waterproof, water shedding enclosure that surrounds the top and electrical connection sockets of portable electrical generators.

The foregoing description of the embodiments of the invention has been presented for the purposes of illustration and description. It is not intended to be exhaustive or to limit the invention to the precise form disclosed. Many modifications and variations are possible in light of this disclosure. It is intended that the scope of the invention be limited not by this detailed description, but rather by the claims appended hereto.

What is claimed is:

1. A system for the shielding of outdoor electrical equipment from inclement weather, said system comprising:

a plurality of support brackets affixed to a portable outdoor electrical generator;

a support frame disposed in said support brackets;

a waterproof cover disposed over said support frame;

a continuous waterproof apron hanging down from a bottom edge of said cover, adapted to covering electrical outlets disposed on a first side of said portable outdoor electrical generator while covering at least a portion of two sides adjacent to said first side of said portable outdoor electrical generator and corners of said portable outdoor electrical generator between said first side of said generator and said two sides adjacent to said first side, said continuous waterproof apron leaving at least one side of said portable outdoor electrical generator opposite to said first side permanently exposed.

2. The system of claim **1**, said system further comprising a covered vent disposed at an apex of said waterproof cover.

3. The system of claim **1** wherein said apron depends from fasteners disposed beneath said bottom edge of said waterproof cover.

4. The system of claim **1** wherein said apron exposes cooling surfaces of said portable outdoor electrical generator to which said support brackets are affixed.

5. The system of claim **1** wherein said waterproof cover further comprises a closable aperture through which a user may supply liquid fuel to said portable outdoor electrical generator.

6. The system of claim **1** wherein said waterproof cover further comprises at least one aperture.

* * * * *