US00D627216S

(12) **United States Design Patent**
Fulginiti

(10) **Patent No.: US D627,216 S**
(45) **Date of Patent: ** Nov. 16, 2010**

(54) **TAMPER CUP SEAL**

(75) Inventor: **Thomas Fulginiti**, Waldorf, MD (US)

(73) Assignee: **The United States of America as represented by the Director, National Security Agency**, Washington, DC (US)

(**) Term: **14 Years**

(21) Appl. No.: **29/315,757**

(22) Filed: **Jul. 21, 2009**

(51) **LOC (9) Cl.** **08-99**
(52) **U.S. Cl.** **D8/499**
(58) **Field of Classification Search** ..... D8/387, D8/394, 397, 399; D9/435, 443, 454; D15/138, D15/140; 70/50, 57.1, 440; 292/37 A, 37 B, 292/37 R, 308, 310, 315, 316, 325, 326
See application file for complete search history.

(56) **References Cited**

U.S. PATENT DOCUMENTS

1,074,769 A * 10/1913 Baruch 292/325
2,750,220 A * 6/1956 Keidel 292/323
3,209,569 A * 10/1965 Bryson et al. 70/440
3,435,975 A * 4/1969 Weigand 215/214
D270,642 S * 9/1983 Watts D15/126
4,489,834 A * 12/1984 Thackrey 206/534
4,676,084 A * 6/1987 Signorelli 70/440
4,756,434 A * 7/1988 Frank 215/201
5,927,532 A * 7/1999 Traub 215/342
5,953,799 A * 9/1999 Seidel 24/704.1
D446,456 S * 8/2001 Adachi et al. D9/529
6,588,812 B1 * 7/2003 Garcia et al. ..... 292/307 R
7,233,245 B2 * 6/2007 O'Neill 340/568.2
D571,201 S * 6/2008 Petrosino et al. D9/436
D580,261 S * 11/2008 Bulte D8/387
D587,581 S * 3/2009 DeMarco et al. D9/454
D608,900 S * 1/2010 Giraud et al. D24/216
2007/0271970 A1 * 11/2007 Marsilio et al. 70/57.1
2010/0139336 A1 * 6/2010 Necchi 70/57.1

* cited by examiner

Primary Examiner—Patricia Palasik
(74) *Attorney, Agent, or Firm*—Robert D. Morelli

(57) **CLAIM**

The ornamental design for a tamper cup seal, as shown and described.

DESCRIPTION

FIG. **1** is a perspective view of an assembled tamper cup seal showing my new design;

FIG. **2** is a side view thereof;

FIG. **3** is a top view thereof;

FIG. **4** is a bottom view thereof;

FIG. **5** is a cross section view taken along line **5**—**5** of FIG. **4**;

FIG. **6** is a perspective view of a disassembled tamper cup seal;

FIG. **7** is a side view of a disassembled tamper cup seal shown for ease of illustration; and,

FIG. **8** is a cross section of a disassembled tamper cup seal shown for ease of illustration and taken along line **8**—**8** of FIG. **7**.

The claimed cup seal is used to cover and protect a screw from being removed, can be countersunk flush to protect the cup seal, and shows evidence of tampering.

1 Claim, 8 Drawing Sheets

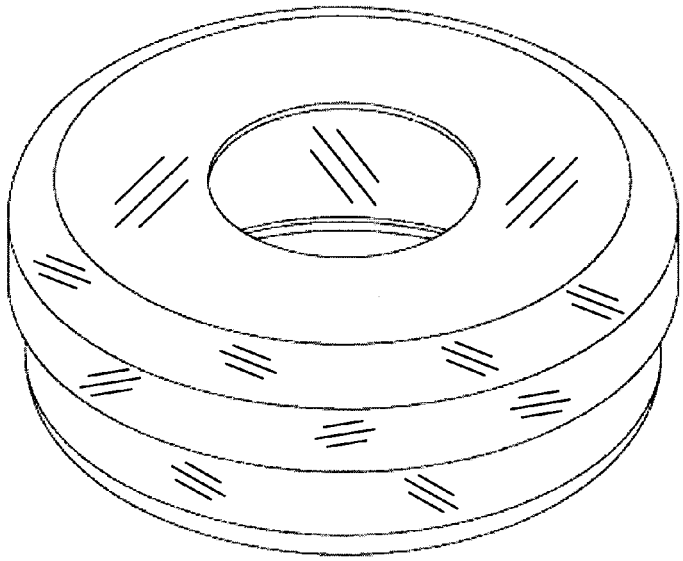

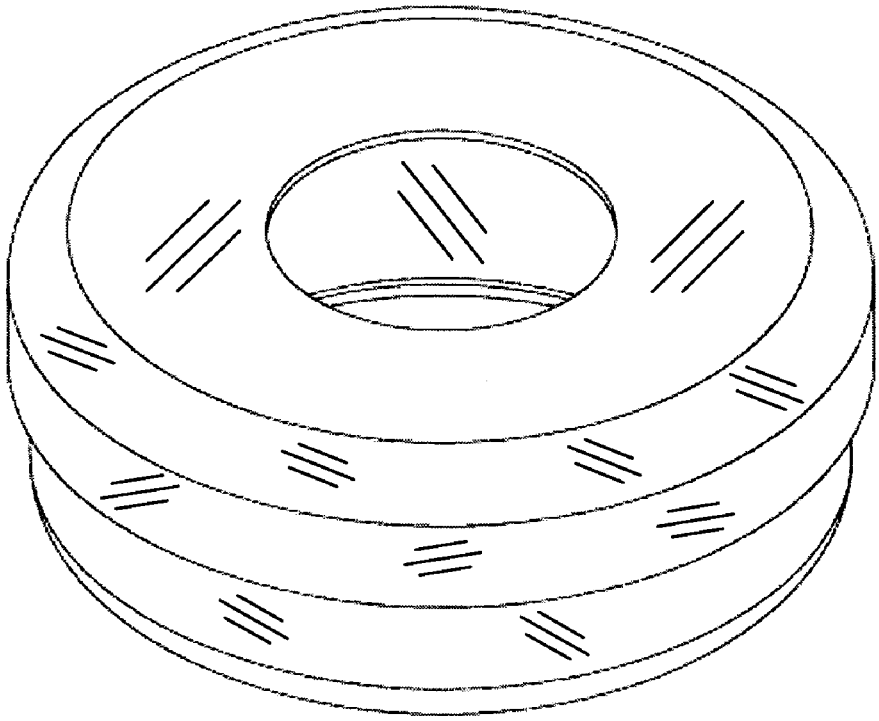

FIG. 1

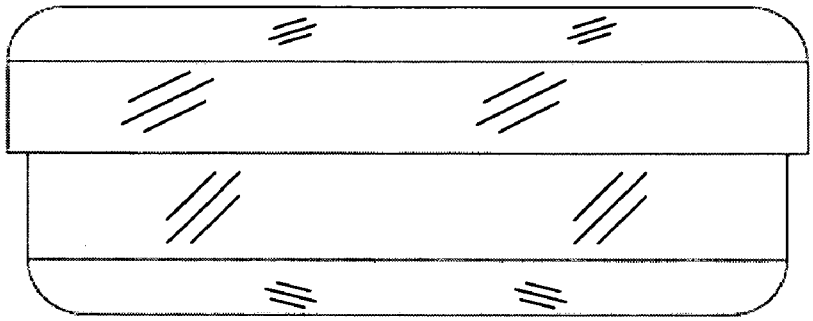

FIG. 2

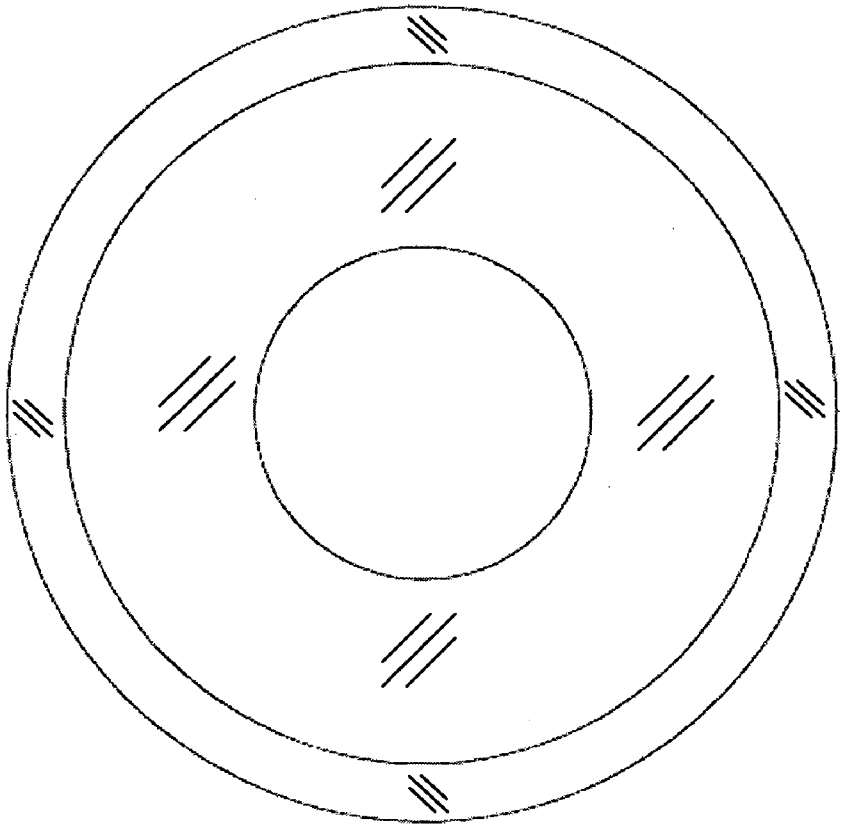

FIG. 3

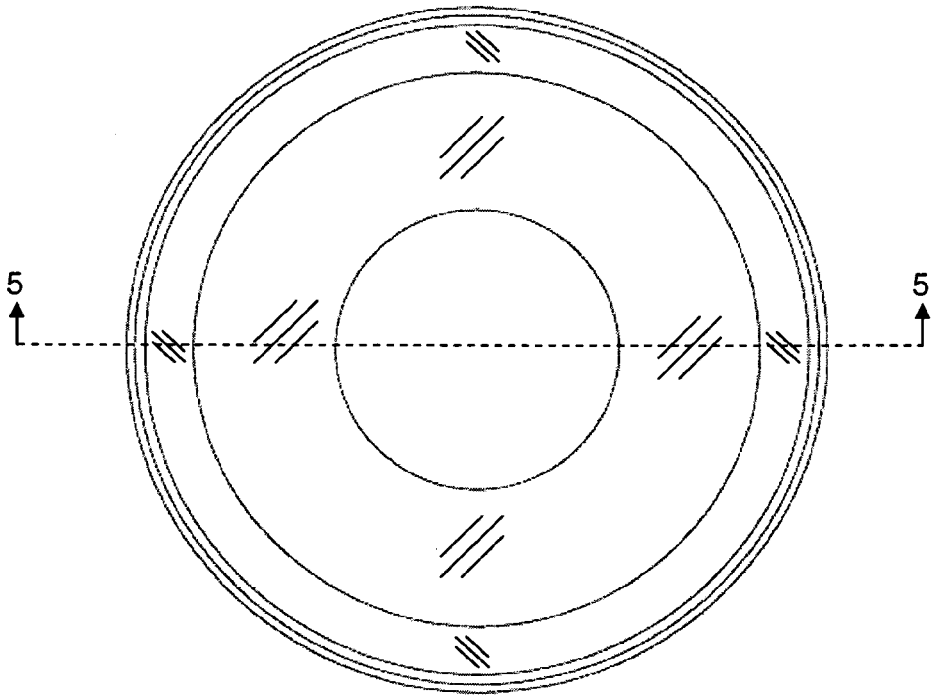

FIG. 4

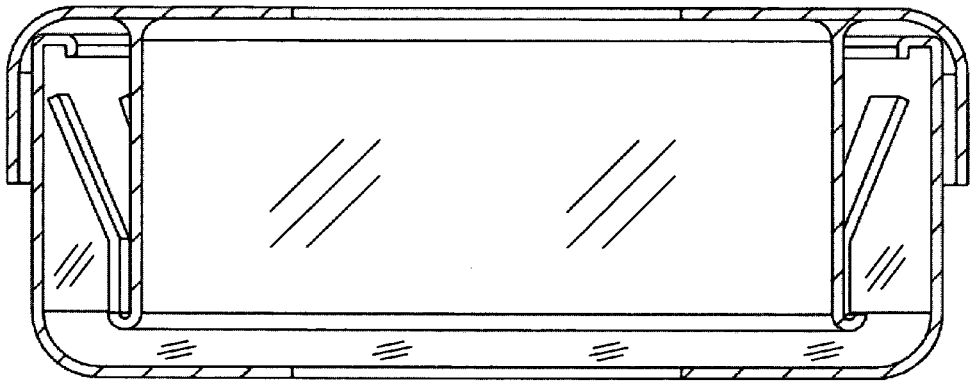

FIG. 5

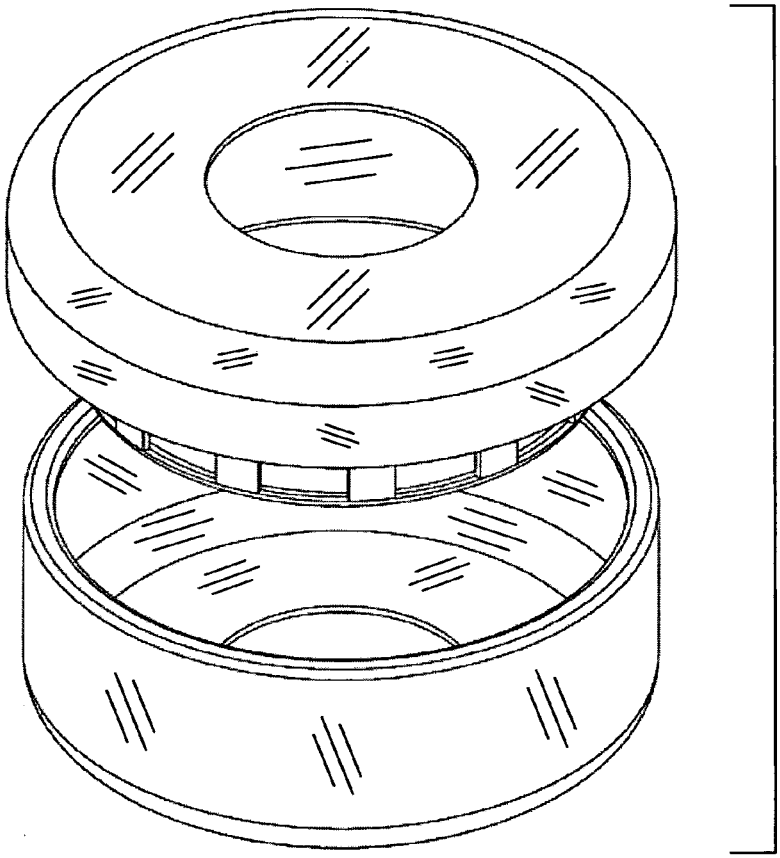

FIG. 6

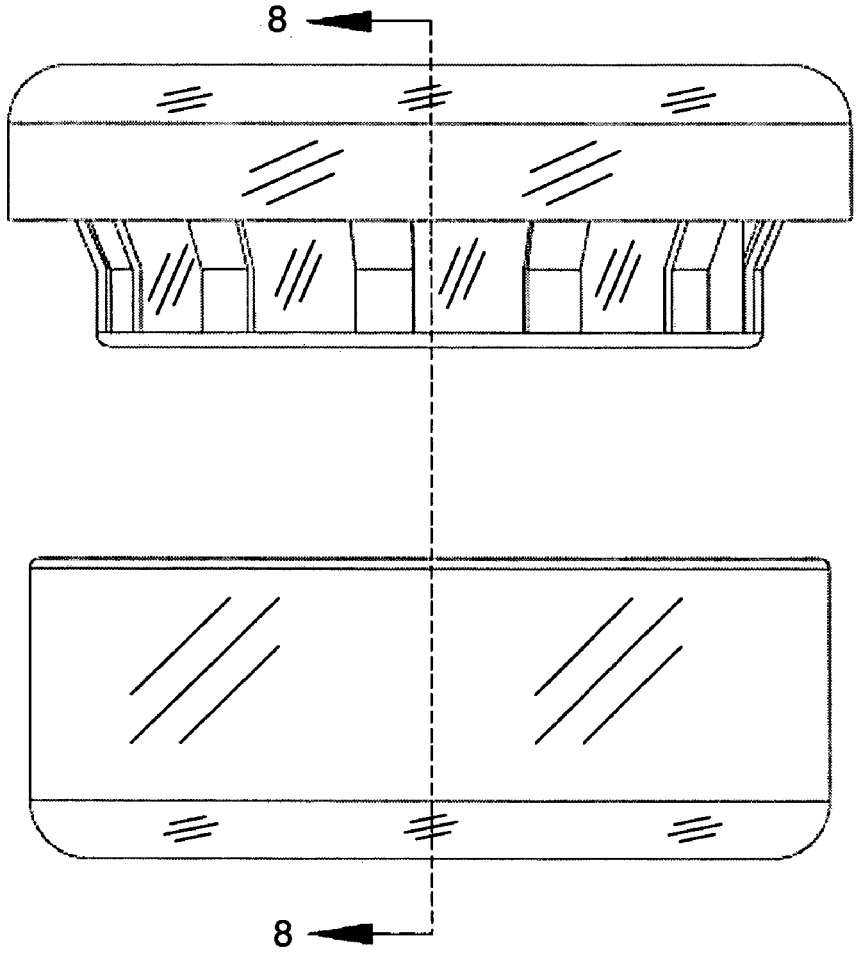

FIG. 7

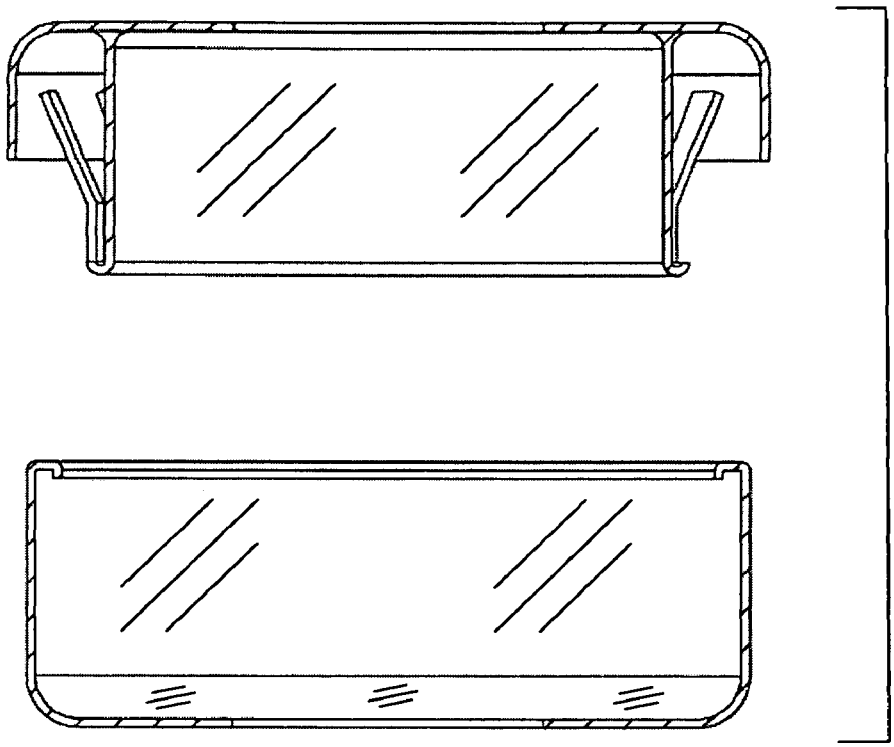

FIG. 8