US009107716B2

(12) **United States Patent**
Frigg et al.

(10) **Patent No.: US 9,107,716 B2**
(45) **Date of Patent: Aug. 18, 2015**

(54) **FLEXIBLE MAXILLO-MANDIBULAR FIXATION DEVICE**

(75) Inventors: **Robert Frigg**, Langendorf (CH); **Jens Richter**, Oberdorf (CH); **Samuel Leuenberger**, Oberdorf (CH); **Carl Peter Cornelius**, Munich (DE); **Ross Jonathan Hamel**, West Chester, PA (US)

(73) Assignee: **DePuy Synthes Products, Inc.**, Raynham, MA (US)

(*) Notice: Subject to any disclaimer, the term of this patent is extended or adjusted under 35 U.S.C. 154(b) by 425 days.

(21) Appl. No.: **12/952,656**

(22) Filed: **Nov. 23, 2010**

(65) **Prior Publication Data**

US 2011/0152946 A1 Jun. 23, 2011

Related U.S. Application Data

(60) Provisional application No. 61/263,542, filed on Nov. 23, 2009.

(51) **Int. Cl.**

A61B 17/56	(2006.01)
A61B 17/80	(2006.01)
A61F 5/058	(2006.01)

(52) **U.S. Cl.**

CPC ***A61B 17/8071*** (2013.01); ***A61F 5/05891*** (2013.01); *A61B 17/8085* (2013.01)

(58) **Field of Classification Search**

USPC 433/7, 10, 18–19; 606/70–71, 280–285, 606/300, 328, 902–903, 905, 906

See application file for complete search history.

(56) **References Cited**

U.S. PATENT DOCUMENTS

1,638,006	A	*	8/1927	Aderer	602/5
1,797,481	A		3/1931	Preston	
2,481,177	A		9/1949	Toflemire	
2,502,902	A		4/1950	Tofflemire	
2,580,821	A	*	1/1952	Toufick	606/282
3,474,779	A		10/1969	Wall	
4,230,104	A		10/1980	Richter	
4,651,724	A	*	3/1987	Berentey et al.	606/284
4,904,188	A		2/1990	Baurmash	
4,959,065	A	*	9/1990	Arnett et al.	606/86 B
5,074,865	A	*	12/1991	Fahmy	606/54
5,250,048	A	*	10/1993	Gundolf	606/297
5,468,242	A	*	11/1995	Reisberg	606/285
D366,114	S	*	1/1996	Ohata	D24/155
5,690,631	A	*	11/1997	Duncan et al.	606/281

(Continued)

FOREIGN PATENT DOCUMENTS

EP	0654250	5/1995
WO	WO 99/05982	2/1999

(Continued)

Primary Examiner — Christian Sevilla

(74) *Attorney, Agent, or Firm* — Baker & Hostetler LLP

(57) **ABSTRACT**

A system for achieving maxillo-mandibular fixation includes a bone fixation device including a bone fixation body formed from a plurality of links. The links define corresponding crests and valleys so as to impart flexibility into the bone fixation body. Thus, the bone fixation body can be aligned with the dental arch of the mandible and maxilla as necessary, and subsequently fastened to the underlying bone. Each bone fixation device includes at least one securement location on the fixation body that can attach to a securement device, such that the securement device fixes or stabilizes the mandible and the maxilla with respect to each other.

13 Claims, 7 Drawing Sheets

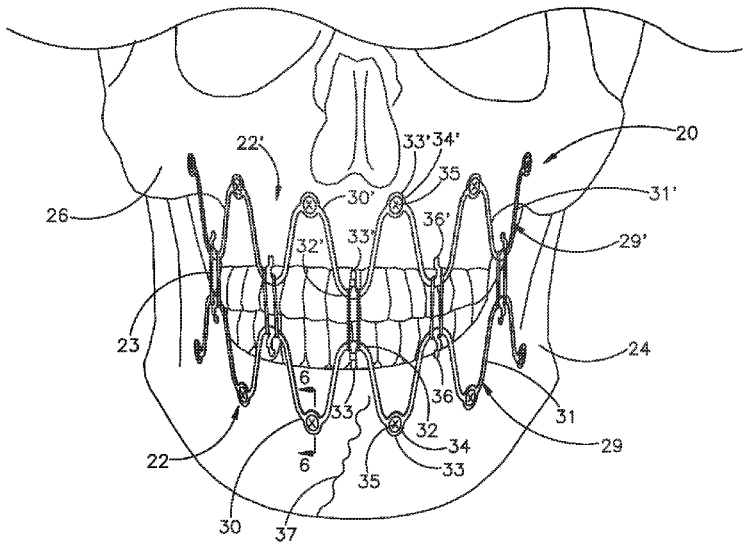

(56) **References Cited**

U.S. PATENT DOCUMENTS

5,752,958	A	5/1998	Wellisz	
5,779,707	A *	7/1998	Bertholet et al.	606/75
5,984,925	A *	11/1999	Apgar	606/284
6,086,365	A	7/2000	Fields	
6,093,188	A *	7/2000	Murray	606/282
6,106,544	A	8/2000	Brazeau	
6,120,288	A	9/2000	Deslauriers	
6,257,884	B1	7/2001	Chang	
6,471,706	B1 *	10/2002	Schumacher et al.	606/70
2004/0030388	A1 *	2/2004	Null et al.	623/17.11
2005/0192675	A1 *	9/2005	Robinson	623/23.46
2008/0255620	A1 *	10/2008	Strauss et al.	606/297
2009/0148804	A1 *	6/2009	Marcus	433/7
2010/0179552	A1 *	7/2010	Wolter	606/71
2011/0152951	A1	6/2011	Baker	

FOREIGN PATENT DOCUMENTS

WO	WO 2004/045389	6/2004
WO	WO 2009/055537	4/2009
WO	WO 2010/025263	3/2010

* cited by examiner

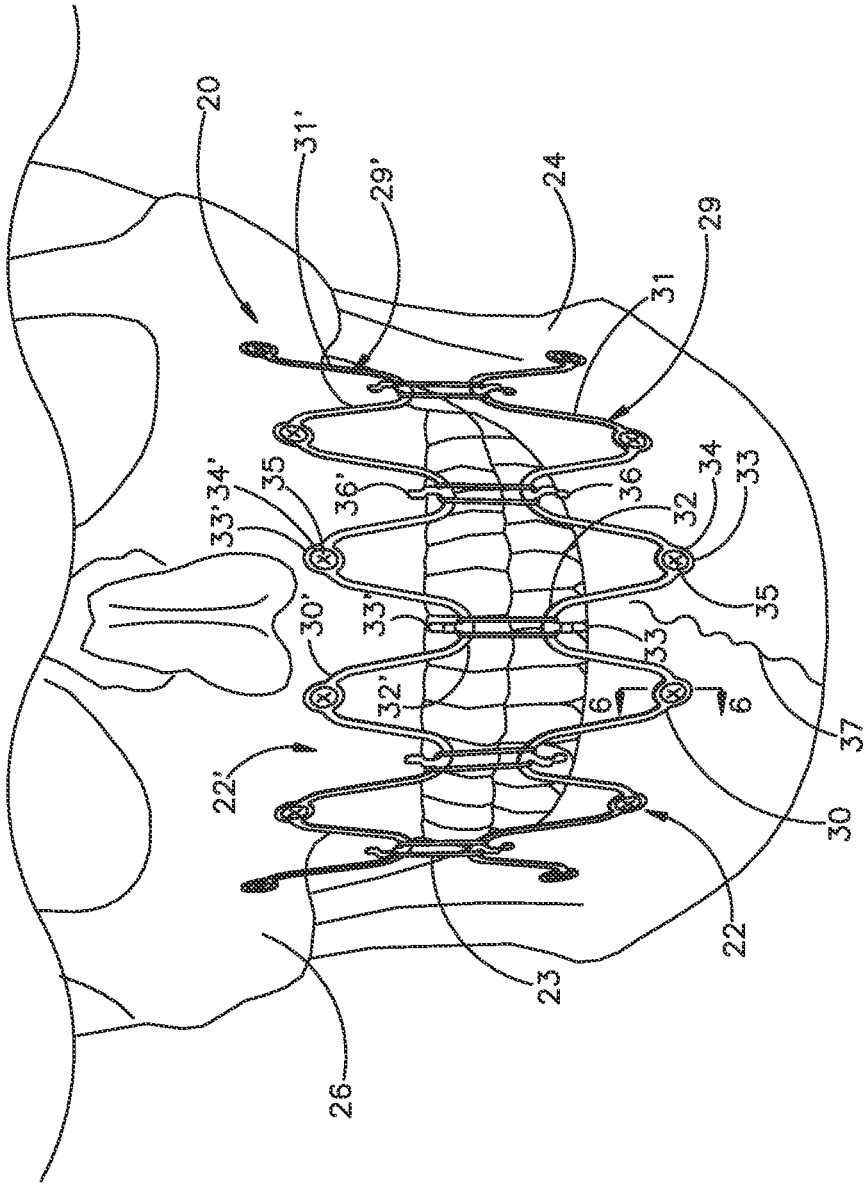
20
31'
29'
24
29
31
33'34'
35
36'
36
34
33
32
35
30'
33'
33
32'
6
6
37
22'
30
22
23
26

Fig.1

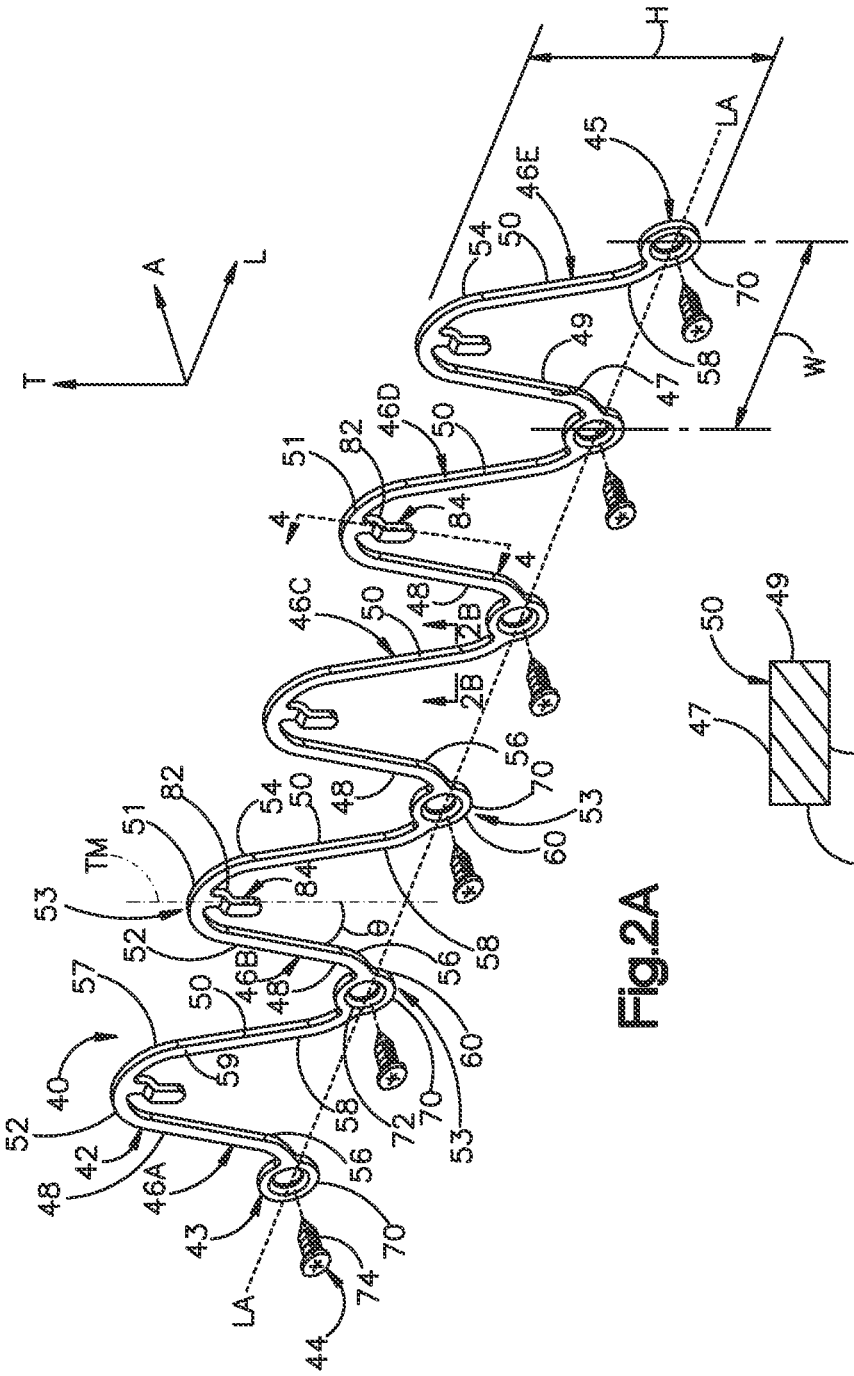
T
A
L
H
W
LA
TM
θ
40
42
43
44
45
46A
46B
46C
46D
46E
47
48
49
50
51
52
53
54
56
57
58
59
60
70
72
74
82
84
2B
4

Fig.2A

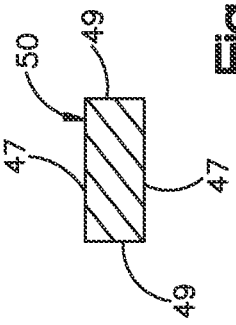
47
49
50

Fig.2B

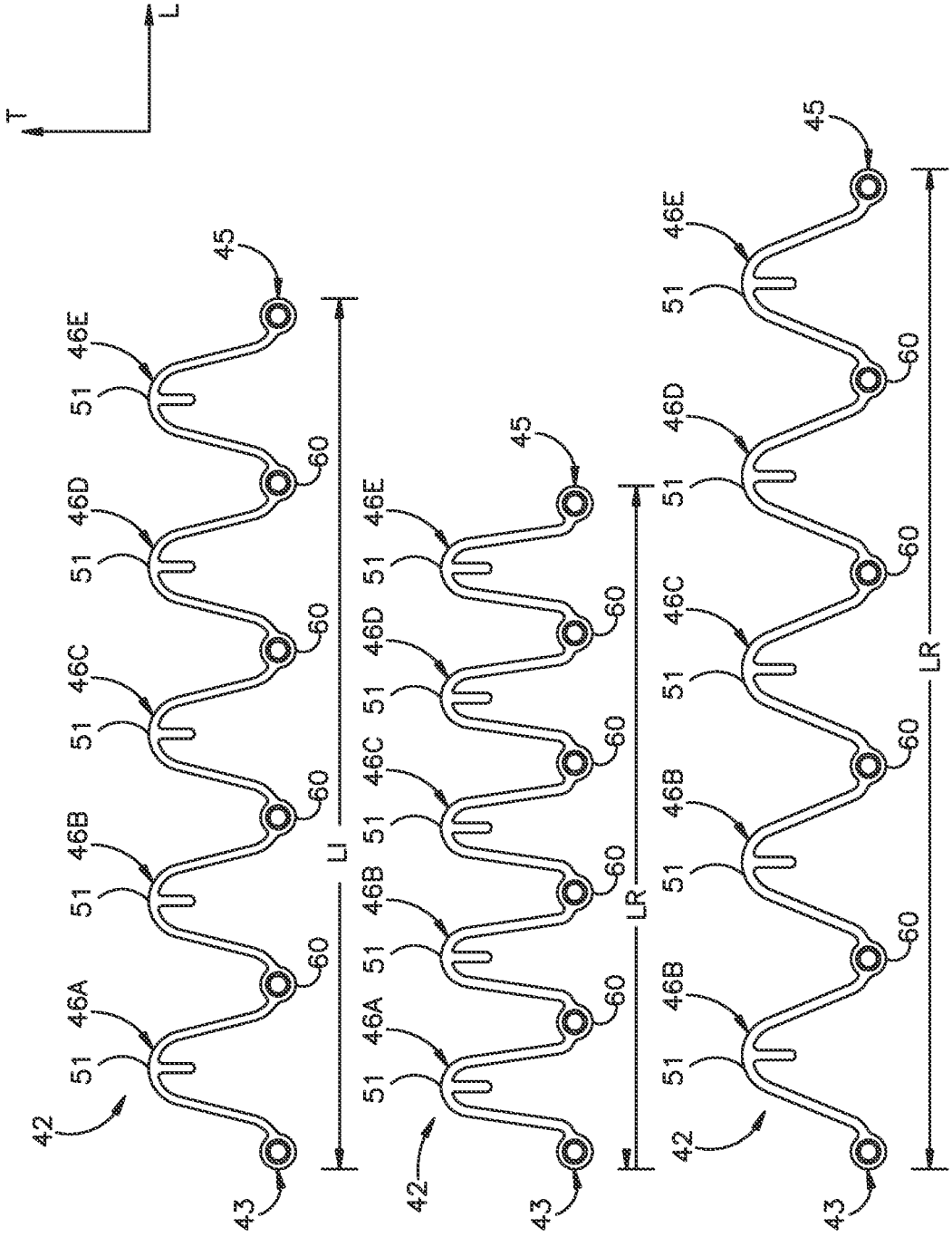

Fig.3A

Fig.3B

Fig.3C

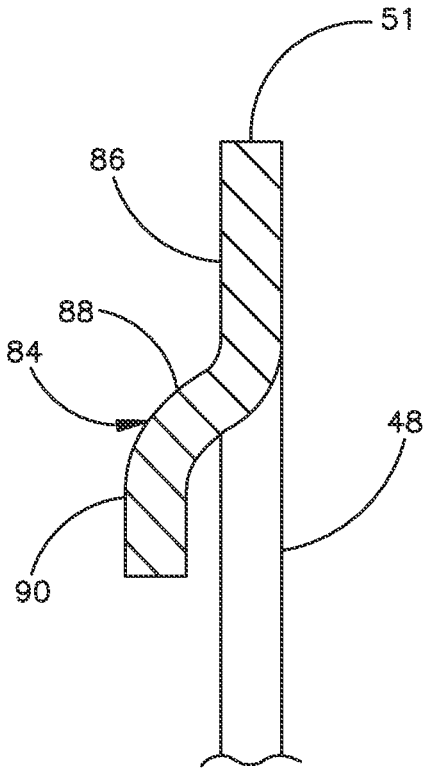

Fig.4

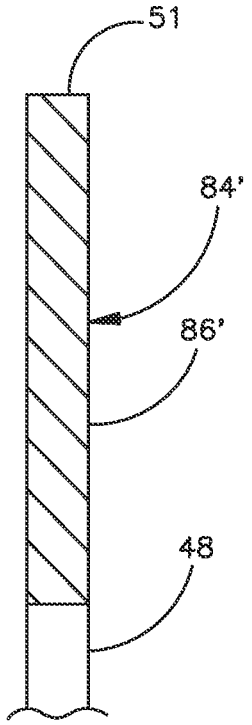

Fig.5

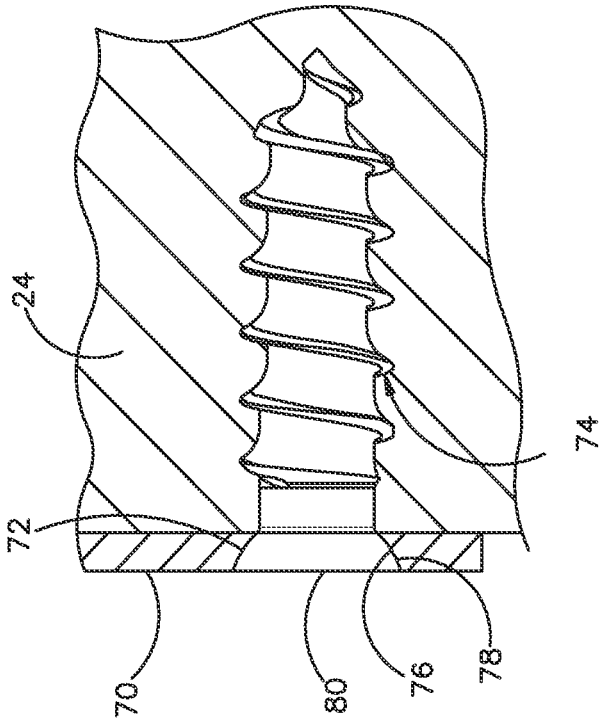
24
72
70
80
76
78
74

Fig.6

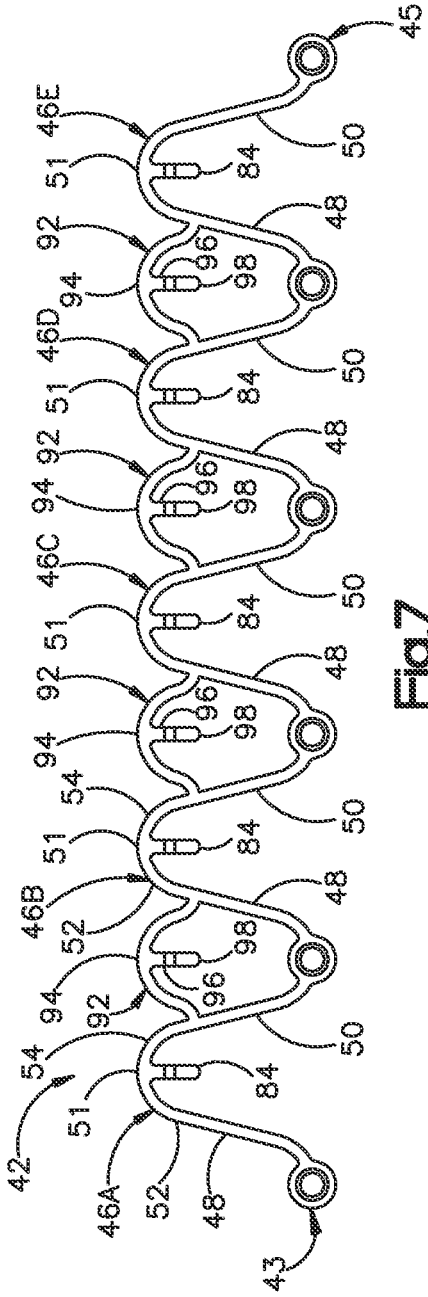
45
46E
51
84
50
48
92
96
98
94
46D
51
84
50
48
92
96
98
94
46C
51
84
50
48
92
96
98
94
54
51
84
50
46B
52
48
98
96
94
92
50
54
84
51
42
46A
52
48
43

Fig.7

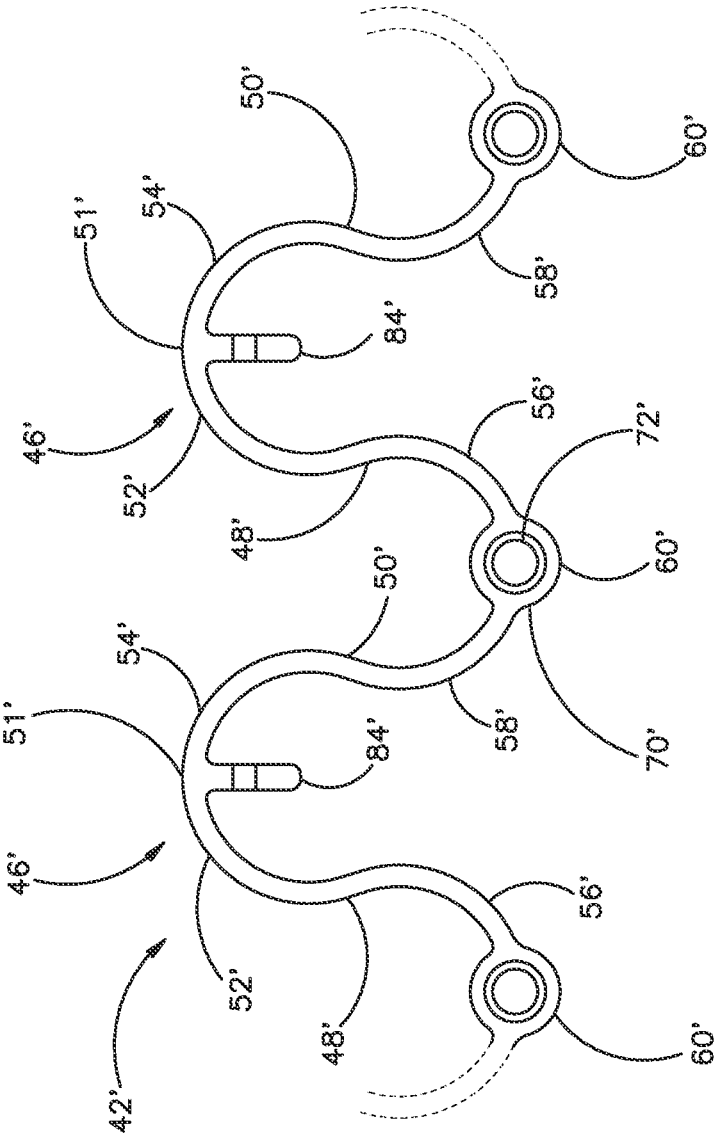

Fig.8

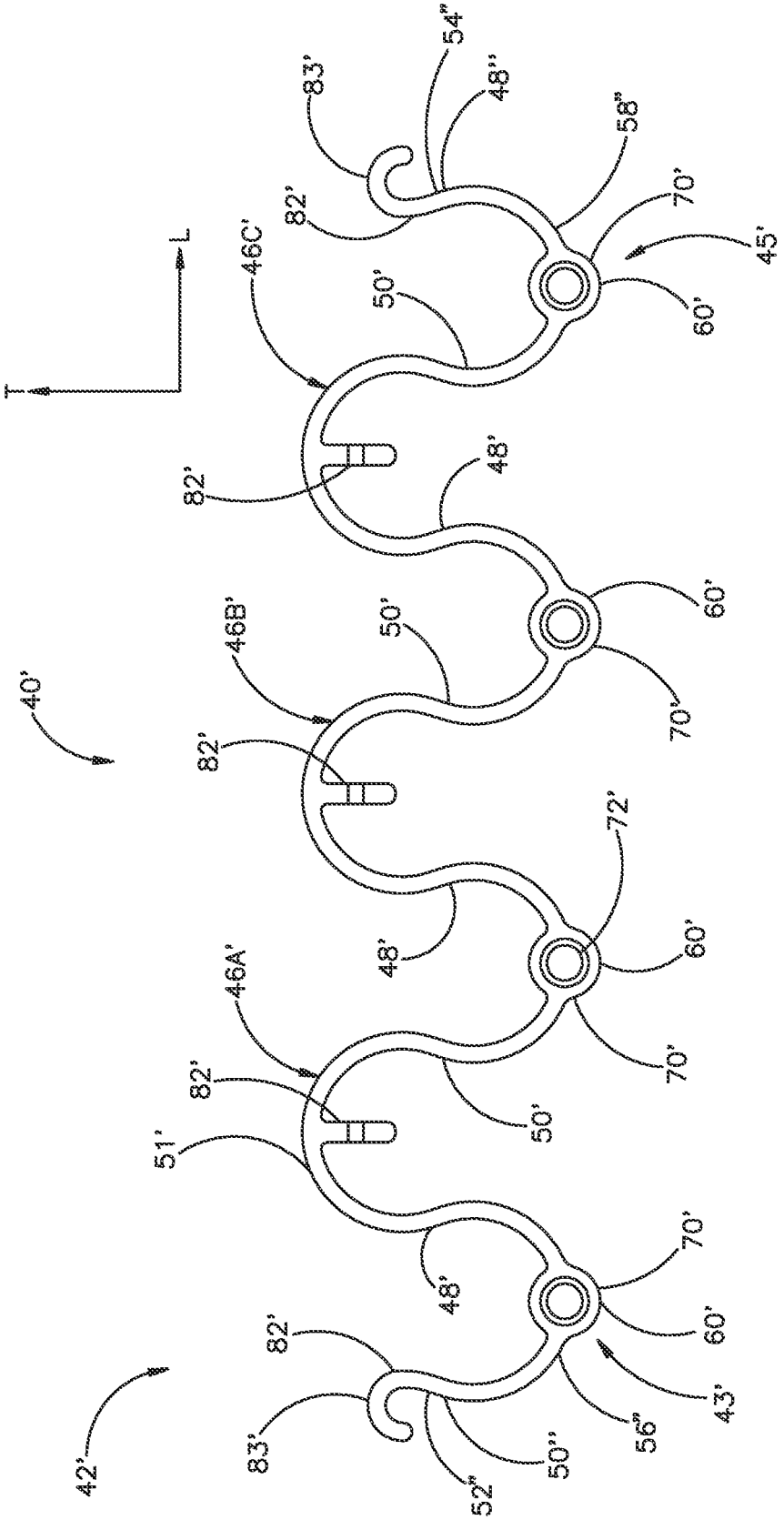

Fig.9

FLEXIBLE MAXILLO-MANDIBULAR FIXATION DEVICE

CROSS-REFERENCE TO RELATED APPLICATIONS

This patent application claims priority to U.S. provisional patent application No. 61/263,542, filed Nov. 23, 2009, which is incorporated herein by reference in its entirety.

BACKGROUND

The fixation or stabilization of the upper and lower dental occlusal arches to each other is known as intermaxillary fixation (IMF) and also known as maxillo-mandibular fixation (MMF). MMF has historically been included in the treatment of fracture, orthognathic, and reconstructive jaw procedures. Various methods for achieving MMF are known in the art.

Circumdental wiring techniques include metallic wires that are placed around one or more teeth and then twisted in various methods to secure the teeth. Wires or twisted pairs of wires can form cables and be twisted to each other to stabilize the dental arch. Loops formed on mandibular teeth can be wired to loops formed around maxillary teeth in order to stabilize the top dentition to the bottom dentition. While the materials used in circumdental wiring are relatively inexpensive, the technique is tedious and time consuming. The wires also can interfere with dental hygiene.

Another conventional technique includes arch bars that are used in combination with wiring. Specifically, a metal bar is preformed to correspond with the curvature of the dental arch. Wires are then passed around the teeth and over the bar, and then twisted to the bar. This is performed at multiple locations along the bar to provide stability around the dental arch. Since the bars typically have bent or formed hooks on them for securing wire, the hooks can be used for wiring the upper arch bar to the lower arch bar. Elastic bands can also be used to fix the upper arch bar to the lower arch bar. Unfortunately, this technique is time consuming, and interferes with dental hygiene.

Another conventional technique involves placing a plurality of screws in the mandible or maxilla in regions that avoid the tooth roots. The screw heads may contain through holes. The screw head serves as an area around which wires may be wrapped, and the holes can facilitate the passage of wire through the heads. Thus, wires may be secured to adjoining sets of screws to provide MMF. This system unfortunately suffers from a lack of overall structural stability which can be necessary, for instance, when addressing fractures around the teeth.

SUMMARY

In accordance with one embodiment, a bone fixation system includes first and second bone fixation devices. The first bone fixation device includes a first fixation body having a first securement location and a first attachment location. The first bone fixation device also includes a bone fastener configured to be embedded into an underlying first bone at the first attachment location, thereby attaching the first fixation body to the first bone. The second bone fixation device includes a second fixation body having a second securement location and a second attachment location. The second bone fixation device also includes a bone fastener configured to be embedded into an underlying second bone at the second attachment location, thereby attaching the second fixation body to the second bone. The first and second securement locations are configured to engage with a securement device that secures the first and second bone fixation devices with respect to each other.

BRIEF DESCRIPTION OF THE DRAWINGS

The foregoing summary, as well as the following detailed description, is better understood when read in conjunction with the appended drawings. For the purpose of illustrating the maxillo-mandibular fixation device and related method thereof, there is shown in the drawings exemplary embodiments; however, the maxillo-mandibular fixation device and related methods are not limited to the specific embodiments and methods disclosed. Like reference numerals refer to corresponding parts throughout the several embodiments of the drawings, in which:

FIG. **1** is a perspective view of a maxillo-mandibular fixation system including a pair of fixation devices attached to the maxilla and mandible of a patient, and secured together;

FIG. **2**A is a perspective view of a bone fixation body constructed in accordance with one example embodiment in a neutral configuration;

FIG. **2**B is a sectional elevation view of the fixation device illustrated in FIG. **2**A taken along the line **2**B-**2**B;

FIG. **3**A is a front view of the fixation device illustrated in FIG. **2**A in the neutral configuration;

FIG. **3**B is a front view of the fixation device illustrated in FIG. **3**A, but shown in a compressed configuration;

FIG. **3**C is a front elevation view of the fixation device illustrated in FIG. **3**A, but shown in an expanded configuration;

FIG. **4** is a sectional elevation view of the fixation device illustrated in FIG. **2**A, taken along line **4**-**4**;

FIG. **5** is a sectional elevation view of the fixation device similar to FIG. **4**, but illustrated in accordance with an alternative embodiment;

FIG. **6** is a sectional elevation view of the mandibular fixation device illustrated in FIG. **2**A, implanted in the manner illustrated in FIG. **1**, and taken along line **6**-**6** of FIG. **1** to show the fixation of the device to the mandible;

FIG. **7** is a front elevation view of a bone fixation body constructed in accordance with an alternative embodiment;

FIG. **8** is a front elevation view of a bone fixation body constructed in accordance with another alternative embodiment; and

FIG. **9** is a front elevation view of a bone fixation body constructed in accordance with another alternative embodiment.

DETAILED DESCRIPTION OF ILLUSTRATIVE EMBODIMENTS

For convenience, the same or equivalent elements in the various embodiments illustrated in the drawings have been identified with the same reference numerals. Certain terminology is used in the following description for convenience only and is not limiting. The words "right", "left", "upper," and "lower" designate directions in the drawings to which reference is made. The words "inward", "inwardly", "outward", "outwardly," "upward," "upwardly," "downward," and "downwardly" refer to directions toward and away from the geometric center of the device and/or designated parts thereof. The terminology intended to be non-limiting includes the above-listed words, derivatives thereof and words of similar import.

Referring initially to FIGS. **1** and **2**A-B, a bone fixation, or stabilization, system **20** is configured to provide maxillo-

mandibular fixation (MMF) for assisting the repairing of an injury to the maxillo-mandibular region. For instance, when the mandible **24** and/or maxilla **26** is fractured at a fracture location **37**, it is desirable to stabilize the broken bone segments by fixing or stabilizing the maxilla and the mandible relative to each other. The fixation system **20** includes a pair of fixation devices **22** and **22'**, including bone fixation bodies **29** and **29'**, one or more fasteners **35** that attach each fixation body **29** and **29'** to underlying bone, and one or more securement devices **23** that connect, or secure the fixation devices **22** and **22'** to each other. The fasteners **35** can include bone screws or any other type of fastener suitable for attaching the fixation bodies **29** and **29'** to underlying bone. Thus, the fixation devices **22** and **22'** can be secured to the mandible **24** and the maxilla **26**, respectively, of a patient. The suitable securement device **23** can secure the fixation bodies **29** and **29'** to each other, thereby fixing the mandible **24** and the maxilla **26** with respect to relative movement.

Specifically, each fixation body **29** and **29'** includes a respective plurality of flexible links **31** and **31'** extending between a respective plurality of longitudinally spaced interfaces **33** and **33'**. The pluralities of flexible links **31** and **31'** extend upwardly and downwardly in an alternating pattern between the interfaces **33** and **33'**, thereby defining respective pluralities of valleys **30** and **30'** and crests **32** and **32'** between opposed ends of the fixation bodies **29** and **29'**. The interfaces **33** and **33'** defined at respective valleys **30** and **30'** and crests **32** and **32'** can be configured as connection or attachment locations. In the illustrated configuration, the interfaces **33** and **33'** at the valleys **30** and **30'** are configured as attachment locations having apertures **34** and **34'**, respectively. The apertures **34** and **34'** can be configured to receive the fasteners **35**. For example, the apertures **34** and **34'** of the illustrated configuration are threaded so as to provide screw holes that receive fasteners **35** in the form of bone screws. Accordingly, the valleys **30** and **30'** are configured as attachment locations that can be attached to underlying bone, for instance via the bone screws. The interfaces **33** and **33'** at the crests **32** and **32'** are configured as connection, or securement locations which can be secured to each other to in turn secure the fixation devices **22** and **22'** with respect to each other. In the illustrated configuration, the interfaces **33** and **33'** at the crests **32** and **32'** are defined as securement locations having tangs **36** and **36'** that extend outwardly from the crests **32** and **32'** in a direction generally towards and in between the immediately adjacent valleys **30** and **30'**, respectively. The tangs **36** and **36'** can be configured to receive a securement device, for instance the securement device **23**, so as to secure the tangs **36** and **36'** to each other. The securement device **23** can be provided as a suitable wire, elastic band, or any other alternative securement apparatus as desired.

The mandibular and maxillo fixation devices **22** and **22'** can be identically or substantially identically constructed from a bone fixation device **40** (see FIG. **2**A), and oriented as desired when implanted into the mandible **24** and maxilla **26** of a patient to provide the fixation devices **22** and **22'**. Thus, the vertical orientations of the fixation devices **22** and **22'** are inverted with respect to each other in the illustrated configuration. In particular, the mandibular fixation device **22** is oriented such that the plurality of crests **32** are positioned above the plurality of valleys **30**, and the maxillo fixation device **22'** is oriented such that the plurality of crests **32'** is positioned below the plurality of valleys **30'**. The maxillo-mandibular fixation system **20** will now be described with reference to the bone fixation device **40** as illustrated in FIG. **2**A.

The bone fixation device **40** is illustrated as oriented in a vertical plane defined by a longitudinal direction "L" and transverse direction "T" that is perpendicular to the longitudinal direction, and has a thickness in a lateral direction "A" that is perpendicular to the longitudinal and transverse directions L and T, respectively. The bone fixation device **40** is elongate along the longitudinal direction L before the fixation device **40** is curved, bent, or otherwise configured to align with, for instance, the mandible or maxilla prior to implantation. Thus, while the description of the bone fixation device **40** is made with reference to the illustrated configuration of the fixation device **40**, the description applies equally to orientations achieved when the fixation device **40** is configured for implantation, for instance, in the maxilla or mandible of a patient.

Unless otherwise specified herein, the terms "lateral," "longitudinal," and "transverse" are used to describe the orthogonal directional components of the bone fixation device **40** and its components as illustrated in FIG. **2**A. The terms "inner," "outer," and derivatives thereof with respect to a specified directional component are used herein with respect to a given apparatus to refer to directions along the directional component toward and away from the center of the apparatus, respectively.

It should be appreciated that while the longitudinal and transverse directions are illustrated as extending along a vertical plane, and that the lateral direction is illustrated as extending along a horizontal plane, that the planes that encompass the various directions may differ during use, depending, for instance, on the desired orientation of the bone fixation device **40** when implanted in a patient. Accordingly, while certain directional terms are used herein to describe the bone fixation device **40** as illustrated merely for the purposes of clarity and convenience, it should appreciated that these orientations may change during use.

Therefore, while the bone fixation device **40** is described with respect to an orientation such that its base (i.e., its valleys) is disposed below its crest (i.e., its crests), it can be subsequently oriented as desired (for instance with the base disposed above the crest when providing the maxillo fixation device **22'**) when implanted in the patient. It should thus be understood that while the bone fixation device **40** is described in its illustrated orientation with reference to implantation in the mandible **24**, it can alternatively be implanted in the maxilla **26** or any other desired bone structures that are to be fixed relative to each other.

With continuing reference to FIG. **2**A, the bone fixation device **40** includes a flexible bone fixation body **42**, which can also be referred to as a fixation plate or a fixation body, and a plurality of fasteners **44** configured to attach the fixation body **42** to underlying bone. The fixation body **42** is illustrated as defining opposed first and second longitudinally outer ends **43** and **45**, respectively, and opposed inner and outer lateral surfaces **57** and **59**. The inner surface **57** faces the gum surrounding the bone structure to which the fixation body **42** is attached, and the outer surface **59** faces a direction opposite the inner surface **57**. The fixation body **42** includes a plurality of sequential links **46** A-E that can be integrally connected as illustrated, or can alternatively be discreetly attached to each other. The links **46**A and **46**E define outer links, while the links **46**B-D define inner links disposed between the outer links **46**A and **46**E. In one embodiment, the fixation body **42** is formed by wire electrical discharge machining (wire EDM), though the body can be formed from any alternative fabrication process. The fixation bodies **42** and **42'** (see FIGS. **8-9**) can be constructed from any suitable biocompatible material including but not limited to commercially pure tita-

nium, titanium alloy such as TAN, stainless steel, reinforced plastics, polymers such as polyether ether ketone (PEEK) or PE, and the like.

As illustrated, the fixation body **42** includes five links **46**A-E, though any number of links can be used such that reliable fixation can be achieved to a patient's mandible or maxilla, such as three links, four links, or five links. Referring to FIG. **2**B, the links **46**A-E have a rectangular cross-section that is elongate in the vertical plane defined by the transverse T and longitudinal L directions. Specifically, the links **46**A-E include opposed elongate edges **47** and minor edges **49**. The elongate edges **47** can have any length as desired, such as about 1 mm while the minor edges **49** can have any length as desired, such as about 0.6 mm. The links **46**A-E can define a lateral thickness as desired, such as approximately 0.6 mm in accordance with one embodiment. Of course, it may be desirable to eliminate sharp corners or edges that could cause injury to surrounding tissue when implanted in a patient. The size and shape of the links **46** impart flexibility to the fixation body **42**, thereby allowing the fixation body **42** to assume multiple sizes, and also allowing for variable positioning of the fixation device **40** when implanted in the patient. In this regard, it should be appreciated that the links **46**A-E can alternatively define any suitable alternative geometric size and shape as desired. One or more of the links **46**A-E can be similarly or identically or substantially identically constructed, and will now be described with reference to the link **46**B.

In particular, referring again to FIG. **2**A, the link **46**B includes a pair of opposed first and second side members **48** and **50**. Each side member defines respective longitudinally inwardly curved upper ends **52** and **54** and opposed longitudinally outwardly curved lower ends **56** and **58**. The upper ends **52** and **54** of the side members **48** and **50** of the link **46**B are joined at a first interface **53**, so as to form a crest **51** of the fixation body **42**. The crest **51** is continuously curved about a laterally extending axis, such that the crest **51** presents a convex surface with respect to a downwardly directed view of the top of the fixation body **42**. Of course, it should be appreciated that the crest **51** could assume any alternative shape as defined by the upper ends **52** and **54** of the side members **48** and **50**, or as defined by a separate structure that joins the upper ends **52** and **54**, either directly or indirectly.

The side members **48** and **50** are longitudinally spaced from each other, and extend linearly so as to flare longitudinally outward from each other along a downward direction from their respective upper ends **52** and **54** to their lower ends **56** and **58** in the illustrated embodiment. Thus, the first side member **48** flares longitudinally outward toward the first outer end **43** of the fixation body **42** in a downward direction along the side member **48**. Likewise, the second side member **50** flares longitudinally outward toward the second outer end **45** of the body in a downward direction along the side member **50**. In the illustrated embodiment, the side members **48** and **50** flare equally outward with respect to a transverse midline TM of the link **46**B at a desired angle θ anywhere between 0° and 90°, for instance between 0° and 45°, such as approximately 14°.

The lower end **56** of the first side member **48** of the link **46**B is connected to the lower end **58** of the side member **50** of the adjacent link **46**A at a second interface **53** to form a valley **60** of the fixation body **42**, and the lower end **58** of the side member **50** of the link **46**B is connected to the lower end **56** of the side member **48** of the adjacent link **46**C at a third interface **53** to likewise form another valley **60** of the fixation body **42**. The valleys **60** are continuously curved about a laterally extending axis, such that the valley presents a convex surface with respect to an upwardly directed view of the bottom of the fixation body **42**. Of course, it should be appreciated that the valleys could assume any alternative shape as defined by the lower ends **56** and **58** of the side members **48** and **50**, or as defined by a separate structure that joins the lower ends **56** and **58** of adjacent links, either directly or indirectly. The side members **48** and **50** of each link are integrally connected to the complementary side members of the adjacent links at the interfaces **53**, though they could alternatively be discreetly attached to each other at the interfaces **53**. Furthermore, the side members **48** and **50** can assume any size and shape as desired that connects the crest **51** to the valleys **60**, either directly or indirectly.

The fixation body **42** can define any desired longitudinal distance, or width W between adjacent valleys **60**, and therefore between adjacent crests **51**, such as approximately 20 mm, and any desired transverse height H between the lower edge of the valley **60** and the upper edge of the crest **51**, such as approximately 17.6 mm. The fixation body **42** can be configured such that a spatial relationship is defined between the respective crests **51** and/or valleys **60**. For example, the spatial relationship can be defined such that the width W between each of the crests **51** and the width W between each of the valleys **60** is uniform throughout the fixation body **42**, as illustrated. Alternatively, the spatial relationship can be defined with two or more crests **51** separated by different widths W, two or more valleys **60** separated by different widths W, or any combination thereof. Of course spatial relationships with respect to the height H between the crests **51** and the valleys **60** can also be defined.

It should be appreciated that although the links **46**A-E of the illustrated configuration are all the same size and shape, that one or more, up to all of the links **46**A-E of the fixation body **42** can have different sizes and/or shapes, for example having different widths W, heights H, or any combination thereof. It should further be appreciated that the links **46**A-E need not all have the same cross-section, as defined between the elongate edges **47** and the minor edges **49**. For example, it may be desirable to configure one or more of the links **46**A-E with different lateral thicknesses, for instance to control the deformation characteristics of particular links when the fixation body **42** is flexed inwardly or outwardly in the longitudinal direction L, or otherwise shaped prior to implantation in a patient, as described in more detail below. Furthermore, the cross section within an individual link can be varied along one or more portions between its respective adjacent valleys **60**.

It should be appreciated that the links **46**A-E define an undulating fixation body **42** shaped in a wave-form having wave segments that are proportional in number to the number of links **46**. While five links **46**A-E are illustrated, the fixation body **42** can include any number of links **46**A-E as desired. Each link **46**A-E is illustrated as defining a crest **51** of the wavelike structure, and a portion of a valley **60** of one or more adjacent wavelike structures. It should also be appreciated that the longitudinal widths W and transverse heights H can vary between adjacent crests and valleys. For instance, one or more of the crests **51** can have a height H greater or lesser than that of one or both of the immediately adjacent crests.

The side member **48** of the outer link **46**A disposed at the first end **43** of the fixation body **42** terminates at its lower end **56**, while the side member **50** of the outer link **46**E disposed at the second end **45** of the fixation body **42** terminates at its lower end **58**. Alternatively, it should be appreciated that a half-link could be disposed at the opposed outer ends **43** and **45**, such that each half-link would terminate at their respective upper ends **52** and **54**, or at any alternative location along their lengths as desired. In the illustrated embodiment, the

lower end **56** of the side member **48** of the outer link **46**A and the lower end **58** of the side member **50** of the outer link **46**E terminate at respective bone attachment locations **70**, as will be described in more detail below.

The fixation body **42** includes a plurality of bone attachment locations **70** that facilitate attachment of the fixation body to the underlying bone. For instance, as described above, the fixation body **42** can be attached to an underlying mandible or maxilla, or any alternative bone structure, such that a bone fracture is disposed between the opposed outer ends **43** and **45** of the fixation body **42**. Accordingly, in the instance of mandibular or maxillo fixation, when a pair of fixation bodies **42** are secured to each other in the manner described above with respect to FIG. **1**, the broken bone segments are relatively immobilized to facilitate healing.

In the illustrated embodiment, the bone attachment locations **70** are provided as screw holes **72** extending laterally through the fixation body **42** at the respective valleys **60**, though one or more alternatively configured attachment locations can be provided in any suitable manner so as to facilitate attachment of the fixation body **42** to underlying bone. The screw holes **72** can be sized to threadedly receive corresponding fasteners **44**, provided in one embodiment as bone screws **74**. Specifically, referring to FIG. **6**, the fixation body **42** includes a beveled inner surface **76** that defines each screw hole **72**, and is sized and shaped to receive a correspondingly beveled outer surface **78** of a screw head **80**. The beveled surface **76** is positioned such that the screw head **80** does not protrude outwardly from the fixation body **42** when fully seated in the screw hole **72**. As illustrated, the screw head **80** is flush with the outer surface **59** of the fixation body **42**, though the screw head **80** could alternatively be inwardly recessed or slightly outwardly protruding with respect to the outer surface **59** of the fixation body **42**.

Of course, the screw hole **72** could assume one of numerous configurations, such that the inner surface **76** can be beveled straight, or rounded at any desired radius, for instance approximately 3.6 mm. Alternatively still, the inner surface **76** need not be beveled, and can extend laterally in a direction parallel to the outer surface of the screw head **80**. As another example, while the inner surface **76** is illustrated as smooth and flat, the inner surface **76** could alternatively be threaded to threadedly engage corresponding threads of the screw head **80**, such that the screw **74** would be self-locking within the screw hole **72**. It should also be appreciated that the bone screws **74** can be self-drilling, or could alternatively be insertable into a pre-drilled hole as appreciated by one having ordinary skill in the art. The fixation device **40** can further include a collar that surrounds the screw hole **72** at the inner surface **57** of the fixation body **42**, such that the collar would be disposed between the fixation body **42** and the underlying bone structure. The collar would thus provide a stand-off that spaces the fixation body **42** from the patient's gum when the bone screws **74** are fully inserted into the underlying bone.

As described above, the links **46**A-E are constructed so as to impart a flexibility to the fixation body **42**. Specifically, the fixation body can bend about a transverse axis to conform generally with dental arches of patients of different sizes and shapes, thereby allowing the bone screws **74** to be inserted into the screw holes **72** and screwed into an underlying mandible or maxilla, as illustrated in FIG. **1**. Furthermore, referring to FIGS. **3**A-C, the links **46**A-E can allow the fixation body **42** to flex longitudinally.

For instance, FIGS. **2**A and **3**A illustrate the fixation body **42** in an initial relaxed, or neutral configuration, whereby the fixation body is in its as-manufactured configuration prior to inward or outward flexing along the longitudinal direction L. In the neutral configuration, the fixation body **42** can define any longitudinal distance LI as desired between the opposed longitudinally outermost edges, such as approximately 100 mm.

However, as shown in FIG. **3**B, a longitudinally inwardly directed force can be applied to one or more, including all, of the links **46**, thereby compressing the crests **51** and/or valleys **60** and achieving a reduced longitudinal length LR of the fixation body **42** to a distance less than the initial distance LI, as desired. The fixation body **42** can be configured such that when the length of the fixation body **42** is adjusted by longitudinal compression, the longitudinal distance, or spacing between the crests **51** and/or valleys **60** (i.e., the width W (FIG. **2**A) between adjacent crests **51** and/or valleys **60**) in the compressed configuration of the fixation body **42** is preserved with respect to the relaxed or neutral configuration of the fixation body **42**. In other words the spacing, or width W between adjacent crests **51** and/or valleys **60** of the fixation body **42** will be smaller after the longitudinal compression, but the crests **51** and/or valleys **60** can maintain their spatial relationship; for instance the crests **51** can still be spaced apart equally as they were in the neutral configuration, and the and valleys **60** can also be spaced apart equally as they were in the neutral configuration.

Additionally, as shown in FIG. **3**C, a longitudinally outwardly directed force can be applied to one or more, up to all, of the links **46**, thereby extending the crests **51** and/or valleys **60** and achieving an extended, or expanded longitudinal length LE of the fixation body **42** to a distance greater than the initial distance LI, as desired. The fixation body **42** can be configured such that when the length of the fixation body **42** is adjusted by longitudinal expansion, the longitudinal distance, or spacing between the crests **51** and/or valleys **60** (i.e., the width W between adjacent crests **51** and/or valleys **60**) in the expanded configuration of the fixation body **42** is preserved with respect to the neutral configuration of the fixation body **42**. In other words the spacing, or width W between adjacent crests **51** and/or valleys **60** of the fixation body **42** will be greater after the longitudinal expansion, but the crests **51** and/or valleys **60** can maintain their spatial relationship; for instance the crests **51** can still be spaced apart equally as they were in the neutral configuration, and the and valleys **60** can also be spaced apart equally as they were in the neutral configuration. It should be appreciated that the fixation body **42** can be configured such that the transverse height H between the crests **51** and/or valleys **60** after the fixation body **42** is compressed and/or expanded is similarly preserved with respect to the neutral configuration of the fixation body **42**.

It should therefore be appreciated that the bone attachment locations **70** can remain aligned with the underlying bone even as the fixation body **42** is flexed longitudinally inward and/or outward. Furthermore, the bone attachment locations **70** can be aligned or substantially aligned with each other along a longitudinal axis LA even as the fixation body **42** is flexed longitudinally inward and outward. In one embodiment, the fixation body **42** can stretch or compress lengthwise longitudinally an amount between 5% and 50% with respect to its length in the relaxed position, for instance between 10% and 40%, and more particularly between 20% and 30%, and more particularly still about 23%. The fixation body **42** can further stretch or compress height-wise transversely by any suitable percentage with respect to its height in the relaxed position, such as between 1% and 25%, for instance between 5% and 15%, and more particularly about 11%. It should be appreciated that when the body **42** is stretched longitudinally, the body **42** tends to shrink or compress transversely, and vice

versa. Furthermore, when the body **42** is compressed longitudinally, the body **42** tends to stretch transversely, and vice versa.

Thus, the configuration of the fixation body **42** can be adjusted in situ while implanting the fixation device **40** in the patient. For instance, the fixation body **42** can be sized and configured as desired based on the size of the underlying bone segments to be fixed. Additionally, the fixation body **42** can be sized and configured to place the connection locations in a desired position prior to fastening the fixation body **42** to underlying bone. Furthermore, the side members **48** and **50** allow the fixation body **42** to be bent or otherwise configured in the vertical plane as well, for instance, when aligning the fixation body **42** with underlying bone. While the fixation body **42** is flexible, the continuity between adjacent links **46** provides sufficient stiffness when the fixation device **40** is affixed to underlying bone and attached to a complementary fixation device in a fixation system.

It should be appreciated that the fixation body **42** can be constructed so as to allow the fixation body **42** to extend and/or compress as desired. In this regard, the fixation body **42** includes at least two side members that are longitudinally spaced from each other by an interface **53** that can expand and compress in response to expansive and compressive forces. As illustrated, the interfaces **53** are curved surfaces (e.g., the crests **51** and valleys **60**) whose curvature can be increased and reduced through flexing, though the interfaces **53** can alternatively include angled connections between the side members **48** and **50**. The compressive and expansive deformation of the fixation body **42** can be plastic, or can alternatively be elastic such that the deformed shape is retained when the fixation body **42** is attached to the underlying bone at the attachment locations **70**. Of course, the height of the fixation body **42** may increase slightly when the fixation body **42** is compressed, and may decrease slightly when the fixation body **42** is extended.

Referring again to FIG. **2**A and also to FIG. **4**, the fixation device **42** further includes a plurality of connection, or securement locations **82** configured to facilitate connecting, or securing together a pair of fixation devices **40** that are inversely oriented, for instance when implanted in a mandible and maxilla, respectively. In the illustrated configuration, the securement locations **82** are disposed at the longitudinal midpoint, or apex of the crest **51** of each of the links **46**A-E. However, it should be appreciated that alternatively, the securement locations **82** can be disposed anywhere on the fixation body **42** as desired. The securement locations **82** can be configured to allow a securement member, such as the securement member **23** described above with respect to FIG. **1**, to connect a pair of fixation bodies **42** to each other so as to restrict relative movement of the bone underlying the connected fixation bodies **42**.

The securement locations **82** are provided in the illustrated embodiment as tangs **84** extending down from the apex of each crest **51** of the fixation body **42**. Otherwise stated, the tangs **84** extend in a generally transverse direction from the crest **51** toward a longitudinal axis LA that extends through the screw holes **72**. One or more, up to all, of the tangs **84** can also include longitudinally or laterally extending segments as well, if desired. For instance, in the illustrated embodiment, each of the tangs **84** includes a first segment **86** that extends transversely down from the transverse inner edge of the apex of the crest **51**. A second, or spacer segment **88** extends transversely downward and laterally outward from the lower end of the first segment **86**. A third segment **90** extends transversely downward from the lower and laterally outer end of the spacer segment **88**.

Thus, a securement device, such as the securement device **23** described above, can engage the lower surface of the spacer segment **88** and laterally inner surface of the third segment **90** when fixing or stabilizing a pair of mandibular and maxillo fixation bodies **42** to each other. Alternatively or additionally, the securement device **23** can engage the laterally inner surface of the first segment **86** and the laterally outer surface of the crest **51**. For instance, a wire can be wrapped around the tang **84** and/or link **46**. Alternatively or additionally, an elastic band can be seated at one end between the tang **84** and the crest **51**. Because securement devices **23** can be attached at multiple locations along the length of the fixation body **42**, the resulting forces associated with coupling the securement devices **23** to a complementary fixation body **42** distributes the resulting forces substantially equally across the length of the fixation body **42**.

Alternatively, referring now to FIG. **5**, one or more, up to all, of the tangs **84'** can include a single segment **86'** constructed similarly with respect to the segment **86**, thus extending vertically down from the crest **51** in the manner describe above. Thus the tang **84'** does not include any lateral or longitudinal directional components. The securement device **23** can be wrapped around the segment **86'** in the case of a wire, for instance, or can be seated between the segment **86'** and the crest **51** in the case of an elastic band. Alternatively still, it should be appreciated that the securement locations **82** can include the crest **51** itself, without any tangs **84** or other additional structure. For instance, a plurality of elastic bands could be slid along the wavelike form of the fixation body **42** to locations at respective crests **51** prior to implantation of the fixation body **42** into underlying bone. Alternatively, a wire could be wrapped around the crests **51** of opposed fixation bodies **51** prior to or after implantation of the fixation bodies **42**. Alternatively still, the securement location **82** could be provided as an aperture extending laterally through the links **46**A-E, for instance at their crests **51**.

The fixation device **40** was illustrated and described above in accordance with one embodiment, it being appreciated that numerous alternative embodiments are contemplated.

For instance, referring to now FIG. **7**, the fixation body can include auxiliary links, and can alternatively or additionally include securement locations that are positioned differently than the securement locations **82** described above. As illustrated in FIG. **7**, the fixation body **42** can include auxiliary links **92** connected between adjacent links **46**. The auxiliary links **92** can extend between the first and second side members **48** and **50** of adjacent links **46** at any respective desired locations along the first and second side members **48** and **50**, respectively. For instance, in the illustrated embodiment, the auxiliary links **92** extend between the first and second side members **48** and **50** at locations proximate to, or at, the respective upper ends **52** and **54** of the first and second side members **48** and **50**. The auxiliary links **92** are illustrated as extending transversely upward and inward from the side members **48** and **50** toward an auxiliary crest **94** that is shaped substantially as described above with respect to the crests **51**. Thus, the auxiliary crest **94** presents a convex surface with respect to a downwardly directed view of the top of the fixation body **42**, though the auxiliary crest **94** could assume any alternative shape as desired. The auxiliary crests **94** allow the auxiliary links **92** to expand and contract as described above with respect to FIGS. **3**A-C, though the auxiliary links **92** can be configured to add an amount of stiffness to the fixation body **42** with respect to the fixation body **42** as illustrated in FIG. **2**A without the auxiliary links **92**. The auxiliary crests **94** can be positioned longitudinally midway between the crests **51** of the links **46**A-E, which can be

referred to as "primary" links **46**A-E when the fixation body **42** includes the auxiliary links **92**.

As illustrated in FIG. **7**, one or more, up to all of the auxiliary links **92** can be configured as auxiliary securement locations **96**, constructed differently or as described above with respect to the securement locations **82**. The auxiliary securement locations **96** can be provided anywhere along the auxiliary links **92**, such as at the apexes of the auxiliary crests **94**. Thus, for instance, the auxiliary securement locations **96** can be configured to allow a securement member, such as the securement member **23** described above with respect to FIG. **1**, to connect a pair of fixation bodies **42** to each other so as to restrict relative movement of the bone underlying the connected fixation bodies **42**. In the illustrated embodiment, the auxiliary securement locations **96** are provided as tangs **98** that extend from the auxiliary crests **94** as described above with respect to tangs **84** and **84'** extending from respective crests **51**. It should be appreciated that the auxiliary securement locations **96** can be provided in addition to the securement locations **82**, as an alternative to the securement locations **82**, or that any combination of the securement locations **82** and/or the auxiliary securement locations **96** can be provided as desired.

Referring now to FIG. **8**, a portion of a fixation body **42'** is illustrated as including a plurality of links **46'** that are shaped differently with respect to the straight side members **48** and **50** of the links **46**A-E illustrated in FIG. **2**A. For instance, as illustrated, the side members **48'** and **50'** of a given link **46'** can be longitudinally inwardly curved toward each other from their respective lower end **56'** and **58'** near their respective valleys **60'** in a transverse upward direction along the side members **48'** and **50'** toward the crest **51'**, then longitudinally curved outwardly away from each other in a continuing transverse upward direction, and finally longitudinally curved inwardly toward each other again at the respective upper ends **52'** and **54'** of the side members **48'** and **50'** near the crest **51'**. It should be appreciated that the illustrated curvature of the side members **48'** and **50'** is an example of alternative curvature for the links **46'**, and that the side members **48'** and **50'** can be configured with any other alternative curvature as desired. It should further be appreciated that the fixation body **42** of a fixation device **40** can be configured entirely of links **46'**, thereby providing a fixation body **42'**, or can be configured with any combination of the links **46'** and the links **46** as described above with reference to FIGS. **2**A-B, as desired. The curved side members **48'** and **50'** can be configured to allow the fixation body **42'** to flex in the transverse direction. Accordingly, when a pair of fixation devices **40** having fixation bodies **42'** are secured to each other as illustrated in FIG. **1**, the fixation devices **40** can flex toward each other in response to the forces applied by the securement device **23**. It should be appreciated that the fixation body **42'** can further include auxiliary links and/or auxiliary securement locations as described above with reference to FIG. **7**.

Furthermore, as described above, the lower end **56** of the side member **48** of the outer link **46**A and the lower end **58** of the side member **50** of the outer link **46**E terminate at respective bone attachment locations **70**, as illustrated in FIG. **2**A. Accordingly, as illustrated in FIG. **2**A, the bone fixation device **40** can terminate at outermost bone attachment locations **70**. Alternatively, as illustrated in FIG. **9**, in which the bone fixation device **40'** includes three links **46**A'-C', the outermost links **46**A' and **46**C' are attached to outermost securement locations **82'** via arms **50"** and **48"**, respectively. The arms **50"** and **48"** extend longitudinally outwardly from the ends **43'** and **45'** of the fixation body **42'**, between lower arm ends **56"** and **58"** and upper arm ends **52"** and **54"**, respectively. However, it should be appreciated that the bone fixation device **40'** as illustrated in FIG. **9** could be constructed as described above with reference to FIG. **2**A, or any alternative embodiments described herein. Thus, the outermost securement locations **82'** are disposed longitudinally outward with respect to the outermost bone attachment locations **70'**. As illustrated, the fixation body **42'** can include four bone attachment locations **70'** as illustrated, or any alternative number of bone attachment locations **70'** as desired. The outermost securement locations **82'** can be disposed above, below, or at a transverse height substantially equal to that of the other securement locations **82'** of the bone fixation device **40'**. In the illustrated embodiment, the outermost securement locations **82'** are disposed at a transverse height below that of the other securement locations **82'** of the bone fixation device **40'**.

The outermost securement locations **82'** can be provided as hooks **83'** extending in the longitudinal-transverse plane, or any alternative plane as desired, for example from the upper arm ends **52"** and **54"** of the arms **50"** and **48"**, respectively. Thus, a securement device, such as device **23** described above, can engage the hooks **83'** of opposed fixation bodies **42'** when fixing or securing a pair of mandibular and maxillo fixation bodies **42'** to each other. In this regard, it should be appreciated that any of the securement locations described herein could comprise hooks or any alternative structure suitable for connecting, or securing a pair of fixation devices as described above.

Thus, it should be appreciated that fixation bodies can be provided in accordance with multiple embodiments. Therefore, a kit can be provided that includes a plurality of fixation devices, or portions thereof, including fixation bodies constructed in accordance with all or a portion of any of the embodiments described herein. For example, the kit can include one or more fixation bodies **42** or **42'**, having different numbers of links, different dimensions, such as overall length, link width, height, and lateral thickness, and differently configured links (for instance differently configured side members **48**, **48'**, **50**, and **50'**, securement locations **82**, **82'**, and **96**, and/or auxiliary links **92**). Therefore, the fixation bodies in a kit can have one or more varying characteristic such as size and/or shape. For instance, a first kit can be provided having one or more fixation bodies whose components, for instance the links and/or the securement locations, are of a first size or shape, and other fixation bodies whose components are of a second size or shape different than the first size or shape. Thus, the kit can accommodate multiple maxillo-mandibular fixation procedures involving substantial anatomical variability.

According to another embodiment, methods are provided for implanting the various embodiments of the fixation device **40**. Generally, the methods include the steps of adjusting an orientation (e.g., directional or angular) of the fixation device **40** depending on the anatomy of the underlying bone structure. For instance, a maxillo fixation device will be vertically inverted with respect a mandibular fixation device. It is to be understood that certain steps of the methods described herein can be omitted, combined, performed simultaneously, or performed in a different order. In this regard, it should be appreciated that the maxillo-mandibular fixation devices of the type described above can be provided as a kit that is configured to be implemented for the purposes of maxillo-mandibular fixation using the methods described below.

According to one method of providing fixation to a bone or bone segments of a mandible, a first fixation device such as the fixation device **40** may be adapted by imparting a curvature as desired to correspond to the dental arch. The fixation

device **40** can further be extended or compressed in the longitudinal direction and/or the transverse direction to align the screw holes **72** with a desired fixation location on the underlying bone. Thus the configuration of the fixation body **42** may be adapted to achieve the proper shape and fit for a bone fixation. The fixation body **42** can then be implanted by inserting the fasteners **44** into the underlying bone.

Next, a second fixation device **40** can be implanted in a second bone structure that is to be fixed with respect to the bone structure that underlies the first fixation body **40**. For instance, a second fixation body **42** can be implanted into the maxilla in the manner described above, but in an orientation that is vertically inverse with respect to the first fixation device **40**. It should be appreciated that either the first and/or second fixation device is implanted over a fracture such that the device(s) attach a first bone segment to a second bone segment that has been fractured from the first bone segment.

Once the first and second fixation bodies are implanted into the underlying bone structure, the securement devices **23** are attached to the securement locations of the first and second fixation bodies. In a preferred embodiment, the securement devices **23** are attached between two vertically aligned, or substantially aligned, crests **51**. It should be appreciated that the crests **51** of each fixation body can define the shortest vertical distance between the fixation bodies **40**, thereby allowing for a securement device **23** that has a short length between the fixation bodies **40**.

The illustrated embodiments are directed to a bone fixation system that may be implanted to assist in repairing a fractured bone. The fixation system has particular utility as mandibular or maxillo fixation system, which benefits from accurate anatomical shape and fit.

The foregoing description is provided for the purpose of explanation and is not to be construed as limiting the invention. While various embodiments have been described with reference to preferred embodiments or preferred methods, it is understood that the words which have been used herein are words of description and illustration, rather than words of limitation. Furthermore, although the embodiments have been described herein with reference to particular structure, methods, and embodiments, the invention is not intended to be limited to the particulars disclosed herein. Moreover, any of the embodiments described above can incorporate any structures or features of any of the other embodiments described above, as desired. Those skilled in the relevant art, having the benefit of the teachings of this specification, may effect numerous modifications to the invention as described herein, and changes may be made without departing from the spirit and scope of the invention as defined by the appended claims.

What is claimed:

1. A maxillo-mandibular fixation kit comprising:

a first bone fixation body including a first plurality of interconnected links adjacent to each other along a respective first longitudinal direction between opposed first and second ends of the first bone fixation body, the first plurality of links defining a plurality of crests and an opposed plurality of valleys configured so that the first bone fixation body has an undulating shape,

the first bone fixation body including 1) a first plurality of bone attachment locations, each of the first plurality of bone attachment locations defined at a respective one of the first plurality of valleys, and 2) a first plurality of securement locations, each of the first plurality of securement locations defined at a respective one of the first plurality of crests, wherein the links of the first plurality of links are flexible in the longitudinal direction such that a length of the first bone fixation body defined from the first end to the second end is adjustable along the longitudinal direction; and

a second bone fixation body including a second plurality of interconnected links extending in a respective second longitudinal direction between opposed first and second ends of the second bone fixation body, the second plurality of links defining a plurality of crests, a plurality of valleys, a second plurality of bone attachment locations, and a second plurality of securement locations, wherein the links of the second plurality of links are flexible in the second longitudinal direction;

wherein the first and second pluralities of securement locations are configured to engage with a securement device that fixes the first bone fixation body with respect to the second bone fixation body.

2. The maxillo-mandibular fixation kit as recited in claim **1**, wherein the second bone fixation body differs from the first bone fixation body according to at least one of the following:

the second plurality of interconnected links has a different quantity of links than the first plurality of interconnected links;

the second plurality of bone attachment locations has a different quantity of bone attachment locations than the first plurality of bone attachment locations;

the second plurality of bone attachment locations is spaced differently than the first plurality of bone attachment locations;

the second plurality of securement locations has a different quantity of securement locations than the first plurality of securement locations;

the links of the second plurality of interconnected links have a different shape than the links of the first plurality of interconnected links;

the first bone fixation body further includes a plurality of auxiliary links extending between respective crests of the first plurality of interconnected links; and

the second bone fixation body further includes a plurality of auxiliary links extending between respective crests of the second plurality of interconnected links.

3. The kit of claim **1**, wherein the first bone fixation body is configured for attachment to a maxilla and the second bone fixation body is configured for attachment to a mandible.

4. The maxillo-mandibular fixation kit as recited in claim **1**, wherein the first plurality of bone attachment locations are spaced apart from each other along the first longitudinal direction.

5. The maxillo-mandibular fixation kit as recited in claim **1**, wherein the second plurality of bone attachment locations are spaced apart from each other along the second longitudinal direction.

6. The maxillo-mandibular fixation kit as recited in claim **1**, wherein the links of the second bone fixation body are flexible in the second longitudinal direction such that a length of the second bone fixation body defined from the first end to the second end is adjustable along the second longitudinal direction.

7. The maxillo-mandibular fixation kit as recited in claim **1**, wherein at least one of the bone attachment locations of the first and second bone fixation bodies is configured to receive a respective bone fastener so as to attach the corresponding one of the first and second bone fixation bodies to underlying bone.

8. The maxillo-mandibular fixation kit as recited in claim **7**, further comprising the bone fastener.

9. The maxillo-mandibular fixation kit as recited in claim **8**, wherein the bone fastener is a bone screw.

10. The maxillo-mandibular fixation kit as recited in claim **7**, further comprising a plurality of bone screws each configured to be inserted into a respective one of the bone attachment locations of the first and second bone fixation bodies.

11. The maxilla-mandibular fixation kit as recited in claim **1**, further comprising the securement device.

12. The maxilla-mandibular fixation kit as recited in claim **11**, wherein the securement device comprises at least one of a wire and an elastic band.

13. The maxilla-mandibular kit as recited in claim **1**, wherein each of the second plurality of bone attachment locations is defined at a respective one of the plurality of valleys of the second plurality of links, and each of the second plurality of securement locations is defined at a respective one of the plurality of crests of the second plurality of links.

* * * * *