US009311715B2

(12) **United States Patent**
Rafii et al.

(10) **Patent No.: US 9,311,715 B2**
(45) **Date of Patent: Apr. 12, 2016**

(54) **METHOD AND SYSTEM TO SEGMENT DEPTH IMAGES AND TO DETECT SHAPES IN THREE-DIMENSIONALLY ACQUIRED DATA**

(71) Applicant: **Microsoft Technology Licensing, LLC**, Redmond, WA (US)

(72) Inventors: **Abbas Rafii**, Palo Alto, CA (US); **Salih Burak Gokturk**, Mountain View, CA (US)

(73) Assignee: **Microsoft Technology Licensing, LLC**, Redmond, WA (US)

(*) Notice: Subject to any disclaimer, the term of this patent is extended or adjusted under 35 U.S.C. 154(b) by 0 days.

(21) Appl. No.: **13/665,471**

(22) Filed: **Oct. 31, 2012**

(65) **Prior Publication Data**

US 2013/0057654 A1 Mar. 7, 2013

Related U.S. Application Data

(63) Continuation of application No. 13/219,349, filed on Aug. 26, 2011, now Pat. No. 9,165,368, which is a continuation of application No. 11/349,311, filed on Feb. 6, 2006, now Pat. No. 8,009,871.

(60) Provisional application No. 60/651,094, filed on Feb. 8, 2005.

(51) **Int. Cl.**
G06T 7/00 (2006.01)
G06K 9/00 (2006.01)

(52) **U.S. Cl.**
CPC ***G06T 7/0081*** (2013.01); ***G06K 9/00201*** (2013.01); *G06T 2207/10028* (2013.01); *G06T 2207/20148* (2013.01); *G06T 2207/30261* (2013.01)

(58) **Field of Classification Search**
USPC 382/154, 103
See application file for complete search history.

(56) **References Cited**

U.S. PATENT DOCUMENTS

3,610,754 A 10/1971 Pirlet
3,857,022 A 12/1974 Rebane et al.

(Continued)

FOREIGN PATENT DOCUMENTS

DE 29802435 U1 6/1998
EP 0233464 A1 8/1987

(Continued)

OTHER PUBLICATIONS

Notice of Allowance and Fees Due dated Sep. 26, 2013 re U.S. Appl. No. 13/219,349, 35 pages.

(Continued)

Primary Examiner — Ishrat I Sherali
(74) *Attorney, Agent, or Firm* — Gregg Wisdom; Judy Yee; Micky Minhas

(57) **ABSTRACT**

A method and system analyzes data acquired by image systems to more rapidly identify objects of interest in the data. In one embodiment, z-depth data are segmented such that neighboring image pixels having similar z-depths are given a common label. Blobs, or groups of pixels with a same label, may be defined to correspond to different objects. Blobs preferably are modeled as primitives to more rapidly identify objects in the acquired image. In some embodiments, a modified connected component analysis is carried out where image pixels are pre-grouped into regions of different depth values preferably using a depth value histogram. The histogram is divided into regions and image cluster centers are determined. A depth group value image containing blobs is obtained, with each pixel being assigned to one of the depth groups.

20 Claims, 8 Drawing Sheets

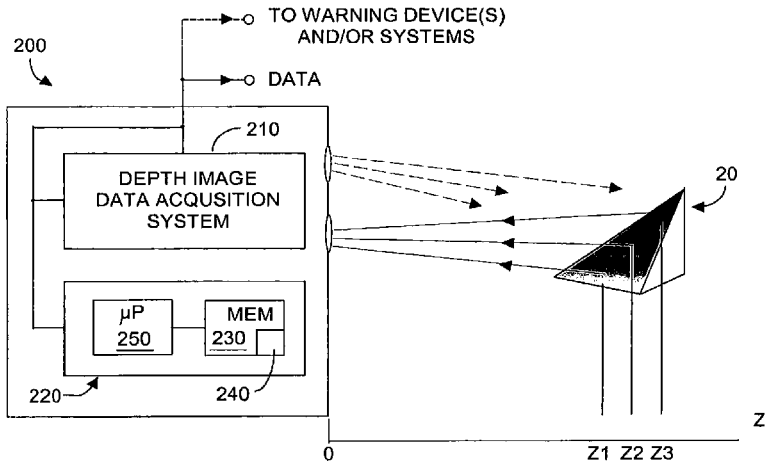

(56) **References Cited**

U.S. PATENT DOCUMENTS

4,187,492	A	2/1980	Delignieres
4,294,544	A	10/1981	Altschuler et al.
4,312,053	A	1/1982	Lipsky
4,333,170	A	6/1982	Mathews et al.
4,376,301	A	3/1983	Roberts et al.
4,541,722	A	9/1985	Jenks
4,686,655	A	8/1987	Hyatt
4,688,933	A	8/1987	Lapeyre et al.
4,716,542	A	12/1987	Peltz et al.
4,956,824	A	9/1990	Sindeband et al.
4,980,870	A	12/1990	Spivey et al.
4,986,662	A	1/1991	Bures
5,003,166	A	3/1991	Girod
5,022,081	A	6/1991	Hirose et al.
5,056,791	A	10/1991	Poillon et al.
5,099,456	A	3/1992	Wells
5,102,223	A	4/1992	Uesugi et al.
5,166,905	A	11/1992	Currie
5,174,759	A	12/1992	Preston et al.
5,381,235	A	1/1995	Inoue et al.
5,442,573	A	8/1995	Bredberg et al.
5,454,043	A	9/1995	Freeman
5,573,077	A	11/1996	Knowles et al.
5,617,371	A	4/1997	Williams
5,733,031	A	3/1998	Lin
5,802,208	A	9/1998	Podilchuk et al.
5,825,033	A	10/1998	Barrett et al.
5,835,616	A	11/1998	Lobo et al.
5,842,194	A	11/1998	Arbuckle
5,946,407	A	8/1999	Bamberger et al.
5,969,822	A	10/1999	Fright et al.
5,983,147	A	11/1999	Krumm
6,002,435	A	12/1999	Yamamoto et al.
6,005,958	A	12/1999	Farmer et al.
6,075,605	A	6/2000	Futamura et al.
6,108,437	A	8/2000	Lin
6,111,517	A	8/2000	Atick et al.
6,137,896	A	10/2000	Chang et al.
6,188,777	B1	2/2001	Darrell et al.
6,195,104	B1	2/2001	Lyons
6,252,598	B1	6/2001	Segen
6,266,048	B1	7/2001	Carau, Sr.
6,281,878	B1	8/2001	Montellese
6,323,942	B1	11/2001	Bamji
6,325,414	B2	12/2001	Breed et al.
6,412,813	B1	7/2002	Breed et al.
6,421,042	B1	7/2002	Omura et al.
6,421,453	B1	7/2002	Kanevsky et al.
6,422,595	B1	7/2002	Breed et al.
6,463,163	B1	10/2002	Kresch
6,480,616	B1	11/2002	Hata et al.
6,526,161	B1	2/2003	Yan
6,564,144	B1	5/2003	Cherveny
6,580,496	B2	6/2003	Bamji et al.
6,614,422	B1	9/2003	Rafii et al.
6,650,318	B1	11/2003	Arnon
6,681,031	B2	1/2004	Cohen et al.
6,690,357	B1	2/2004	Dunton et al.
6,710,770	B2	3/2004	Tomasi et al.
6,734,879	B2	5/2004	Hasha et al.
6,788,809	B1 *	9/2004	Grzeszczuk et al. 382/154
6,791,700	B2	9/2004	Omura et al.
6,801,662	B1	10/2004	Owechko et al.
6,804,396	B2	10/2004	Higaki et al.
6,961,443	B2	11/2005	Mahbub
7,003,134	B1	2/2006	Covell et al.
7,003,136	B1	2/2006	Harville
7,095,881	B2	8/2006	Lelong et al.
8,009,871	B2	8/2011	Rafii et al.
8,166,421	B2	4/2012	Magal et al.
8,429,334	B2	4/2013	Ou
2001/0015123	A1	8/2001	Nishitani et al.
2001/0043719	A1	11/2001	Harakawa et al.
2002/0024676	A1	2/2002	Fukuzaki
2002/0041327	A1	4/2002	Hildreth et al.
2002/0140949	A1	10/2002	Sasaki et al.
2003/0048930	A1	3/2003	Mihara et al.
2003/0053658	A1	3/2003	Pavlidis
2003/0156756	A1 *	8/2003	Gokturk et al. 382/190
2003/0169906	A1	9/2003	Gokturk et al.
2004/0153229	A1	8/2004	Gokturk et al.
2005/0058322	A1	3/2005	Farmer et al.
2005/0135680	A1	6/2005	Kanade et al.
2006/0056689	A1	3/2006	Wittebrood et al.
2009/0183125	A1	7/2009	Magal et al.
2009/0285357	A1	11/2009	Khamene et al.

FOREIGN PATENT DOCUMENTS

EP	0370770	A1	5/1990
EP	0420500	A1	4/1991
EP	0626636	A2	11/1994
EP	0629964	A1	12/1994
EP	0982676	A1	3/2000
EP	1039365	A2	9/2000
EP	1045586	A2	10/2000
GB	1073503	A	6/1967
WO	8400427	A1	2/1984
WO	9721183	A1	6/1997
WO	0019705	A1	4/2000
WO	0021024	A1	4/2000
WO	0221502	A1	3/2002

OTHER PUBLICATIONS

Non-Final Office Action dated Sep. 9, 2013 re U.S. Appl. No. 13/665,481, 18 pages.

A.E. Savaki et al., "Restoration of Real Defocused Images Using Blur Models Based on Geometrical and Diffraction Optics," 1991, IEEE, pp. 919-922.

Ren C. Luo et al., "Defocusing Blur Restoration in Natural Scene Images for Factual Analysis," Nov. 15, 1993, IEEE, pp. 1377-1381.

Non-Final Office Action mailed Jul. 17, 2013 re U.S. Appl. No. 12/074,443 27 pgs.

Non-Final Office Action mailed Feb. 26, 2013 in U.S. Appl. No. 13/219,349; 30 pages.

Non-Final Office Action dated Aug. 15, 2014 in U.S. Appl. No. 13/665,481, 13 pages.

Non-Final Office Action dated Nov. 10, 2014 in U.S. Appl. No. 13/219,347, 17 pages.

Final Office Action in U.S. Appl. No. 13/219,349, mailed Nov. 15, 2012, 18 pages.

Final Office Action dated Feb. 18, 2015 in U.S. Appl. No. 12/074,443, 14 pages.

Non-Final Office Action mailed Dec. 16, 2013 in U.S. Appl. No. 13/219,349, 14 pages.

Final Office Action dated May 28, 2014 in U.S. Appl. No. 13/219,349, 14 pages.

Non-Final Office Action dated Jul. 29, 2014 in U.S. Appl. No. 12/074,443, 15 pages.

Final Office Action mailed Mar. 20, 2014 in U.S. Appl. No. 13/665,481, 11 pages.

Notice of Allowance and Fees Due dated Jun. 25, 2015 in U.S. Appl. No. 13/219,349, 11 pages.

Final Office Action dated Aug. 27, 2015 in U.S. Appl. No. 12/074,443, 15 pages.

Non-Final Office Action dated Nov. 4, 2015 in U.S. Appl. No. 13/665,481, 15 pages.

Lang, Robert, Solid-State Time of Flight Range Camera, Mar. 2001, IEEE Journal of Quantum Electronics, vol. 37, No. 3, 8 pages.

* cited by examiner

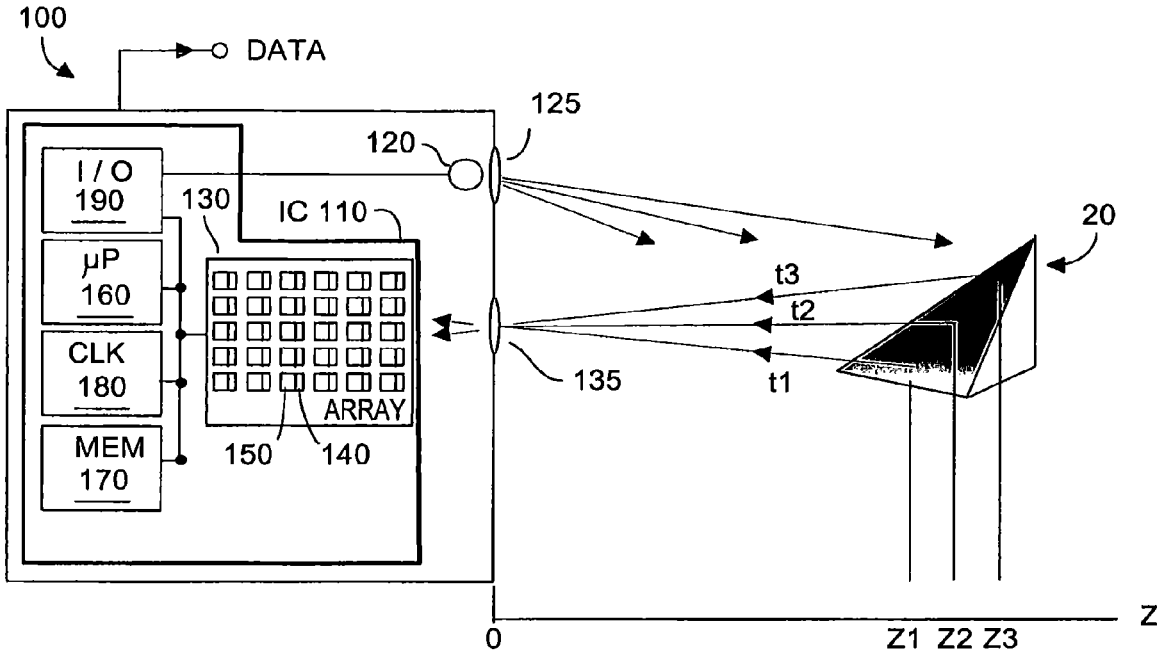

FIG. 1 (PRIOR ART)

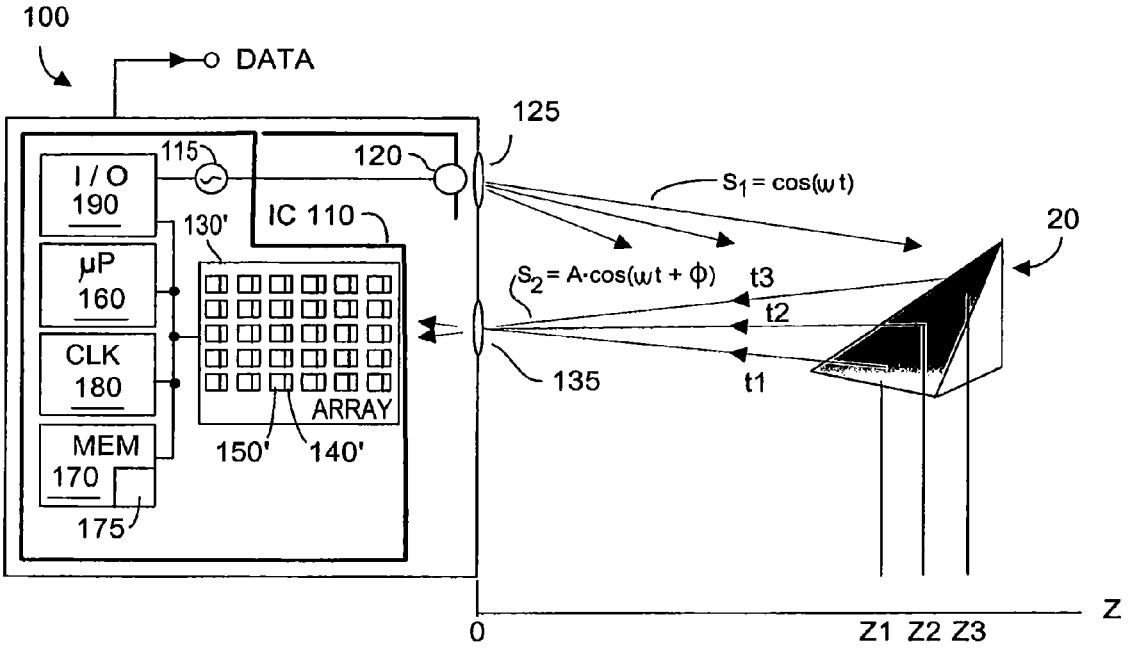

FIG. 2A (PRIOR ART)

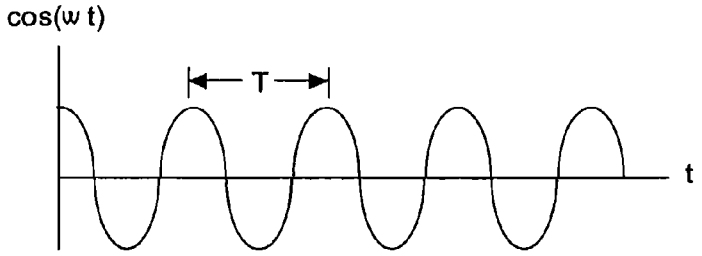

FIG. 2B

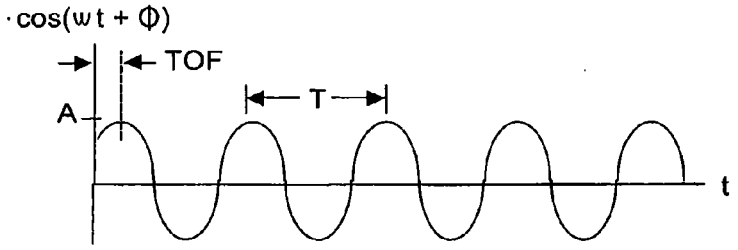

FIG. 2C

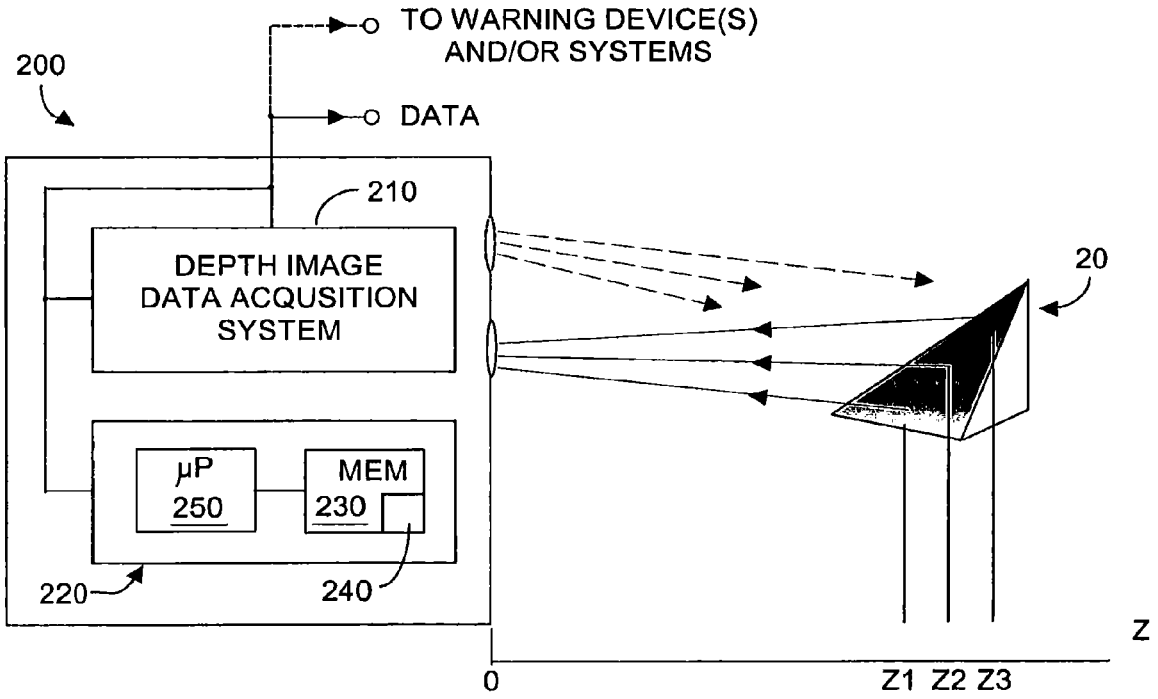
TO WARNING DEVICE(S)
AND/OR SYSTEMS
200
DATA
210
DEPTH IMAGE
DATA ACQUSITION
SYSTEM
20
μP
250
MEM
230
220
240
Z
0
Z1 Z2 Z3

FIG. 3

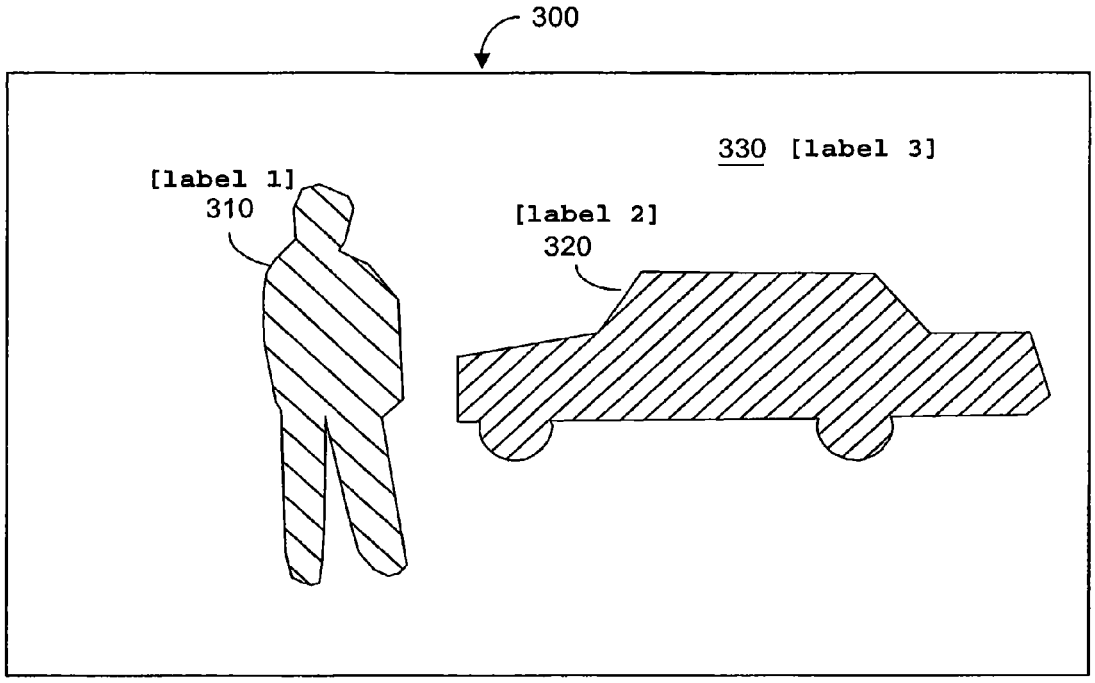
300
330 [label 3]
[label 1]
310
[label 2]
320

FIG. 4A

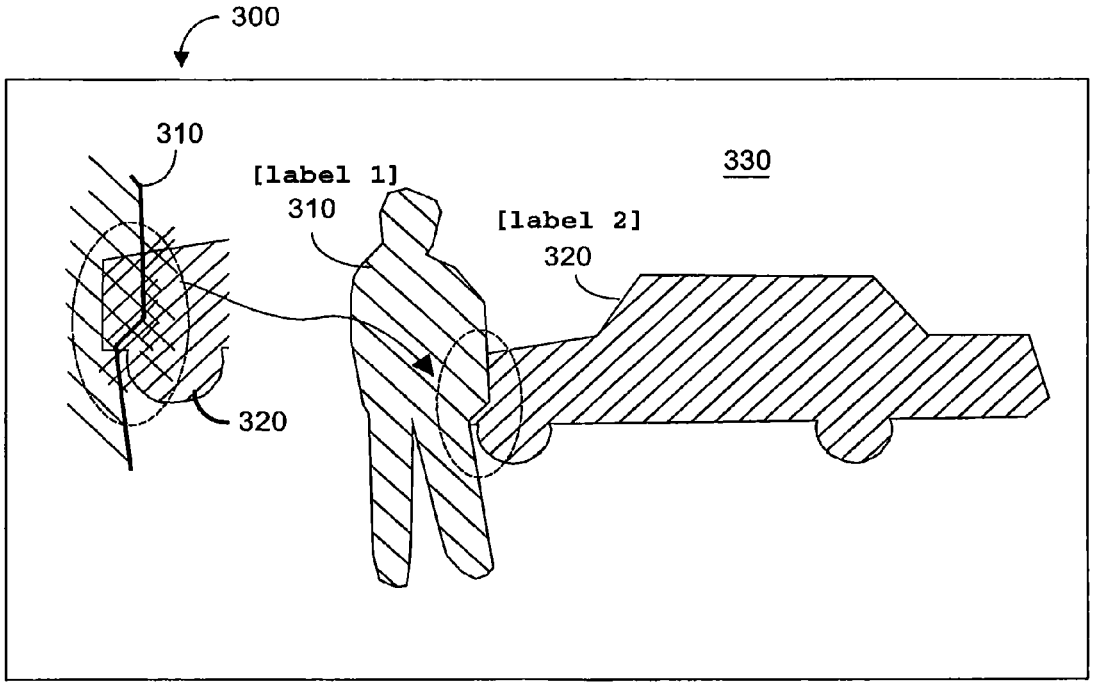
300
310
[label 1]
310
330
[label 2]
320
320

FIG. 4B

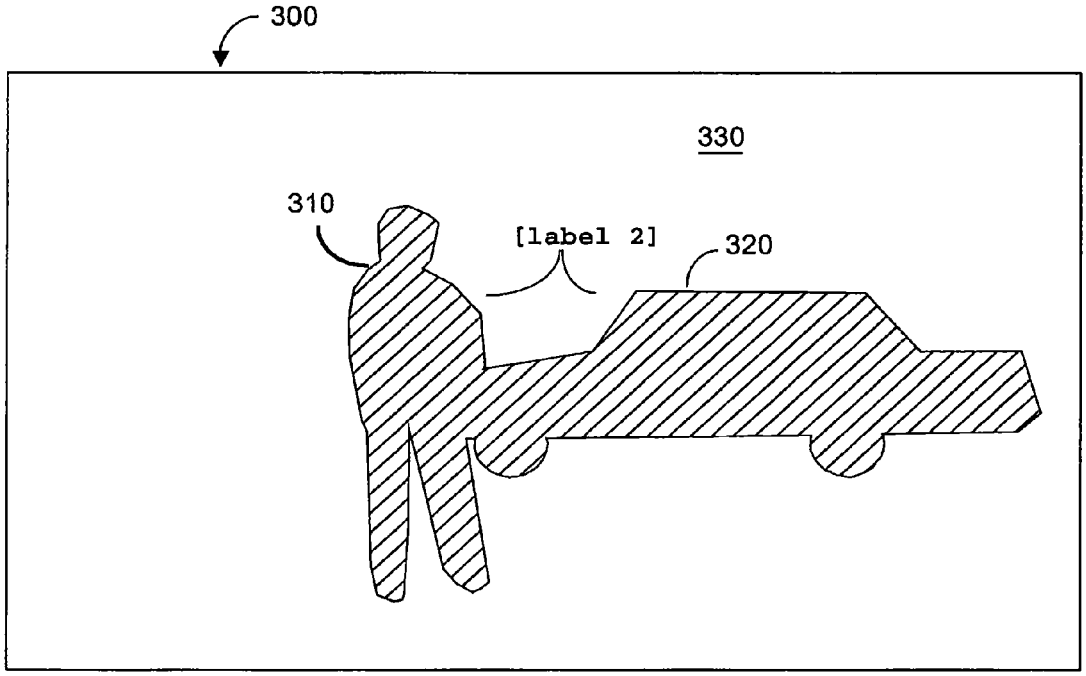

FIG. 4C

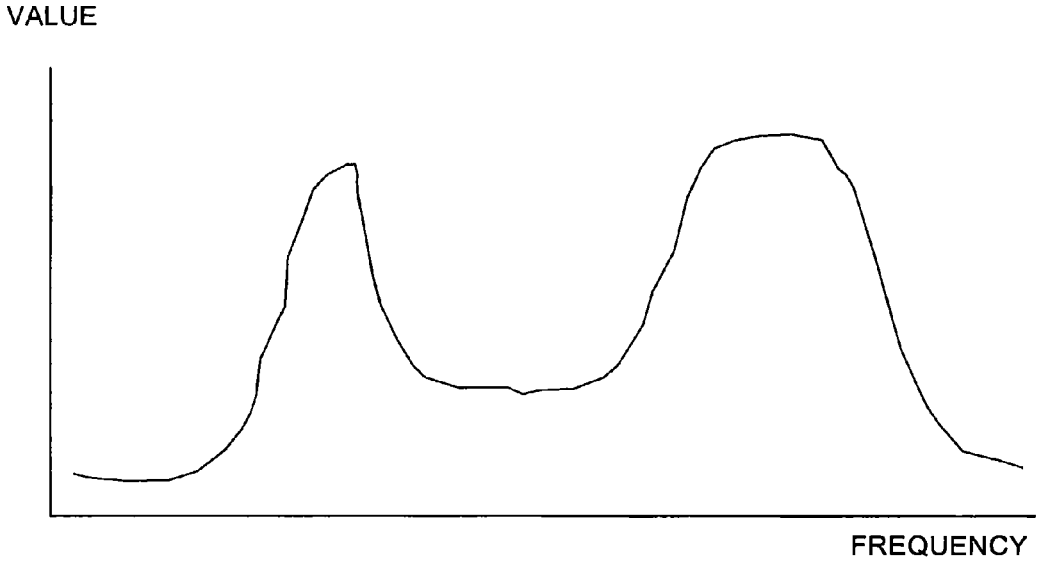

FIG. 8

```
LabelNo = 0;
For r=1 to number of rows in the image
     For c=1 to number of columns in the image
          If (PixelValue(r,c)==white)
               LabelValue(r,c)=0;
          If (PixelValue(r,c)== PixelValue(r,c-1))
               LabelValue(r,c)= LabelValue(r,c-1)
          Else If (PixelValue(r,c)== PixelValue(r-1,c))
               LabelValue(r,c)= LabelValue(r-1,c))
          Else
               LabelValue(r,c)= LabelNo+1.
               LabelNo = LabelNo+1.
          End
          If (PixelValue(r-1,c)== PixelValue (r,c-1))
               Assign LabelValue(r-1,c) and
               LabelValue(r,c-1) as connected labels.
          End
     End
End
Assign the connected labels as the same label.
```

FIG. 5

```
LabelNo = 0;
For r=1 to number of rows in the image
     For c=1 to number of columns in the image
          LabelValue(r,c)=0;
          If (|PixelValue(r,c)-PixelValue(r,c-1)|<Threshold)
                    LabelValue(r,c)= LabelValue(r,c-1)
          Else If (| PixelValue(r,c)-PixelValue(r-1,c)|<Threshold)
                    LabelValue(r,c)= LabelValue(r-1,c)
          Else
                    LabelValue(r,c)= LabelNo+1.
                    LabelNo = LabelNo+1.
          End
          If (|PixelValue(r,c-1)-PixelValue(r -1,c) |<Threshold)
                    Assign LabelValue(r-1,c) and LabelValue(r,c-1)
                    as connected labels.
          End

     End
End
Assign the connected labels as the same label.
```

FIG. 6

```
LabelNo = 0;
For r=1 to number of rows in the image
     For c=1 to number of columns in the image
          LabelValue(r,c)=0;
          If (depthGroupValue(r,c)== depthGroupValue(r,c-1))
                    LabelValue(r,c)= LabelValue(r,c-1))
          Else If(depthGroupValue(r,c)== depthGroupValue(r-1,c))
                    LabelValue(r,c)= LabelValue(r-1,c).
          Else
                    LabelValue(r,c)= LabelNo+1.
                    LabelNo = LabelNo+1.
          End if
          If (depthGroupValue(r,c-1)==depthGroupValue(r-1,c))
                    Assign LabelValue(r-1,c) and LabelValue(r,c-1)
                    as connected labels.
          End

     End
End
Assign the connected labels as the same label.
```

FIG. 7

METHOD AND SYSTEM TO SEGMENT DEPTH IMAGES AND TO DETECT SHAPES IN THREE-DIMENSIONALLY ACQUIRED DATA

CROSS-REFERENCES TO RELATED APPLICATIONS

This application is a Continuation-In-Part of U.S. patent application Ser. No. 13/665,481, filed Oct. 31, 2012 entitled "Gesture Recognition System Using Depth Perceptive Sensors," which is a continuation of U.S. patent application Ser. No. 12/074,443, filed Mar. 4, 2008, entitled "Gesture Recognition System Using Depth Perceptive Sensors," which is a continuation of U.S. Pat. No. 7,340,077, filed Feb. 18, 2003, entitled "Gesture Recognition System Using Depth Perceptive Sensors," which claimed priority from U.S. provisional patent application No. 60/357,730, entitled "Natural Touch and Gesture Based Interaction for Electronic Systems," filed Feb. 15, 2002, and from U.S. provisional patent application No. 60/394,068, entitled "Shape Representation and Recognition by Random Histograms", filed Jul. 2, 2002, and from U.S. provisional patent application No. 60/410,415, entitled "Gesture Recognition System with 3D Input," filed on Sep. 13, 2002. This application is a continuation application of U.S. patent application Ser. No. 13/219,349, filed Aug. 26, 2011, which is a continuation application of U.S. Pat. No. 8,009,871, filed on Feb. 6, 2006, which claims the benefit of U.S. provisional patent application No. 60/651,094, filed Feb. 8, 2005, both of which are incorporated herein by reference in its entirety.

BACKGROUND OF THE INVENTION

Field of the Invention

The invention relates generally to recognizing objects acquired in three-dimensionally acquired data, including data acquired from image sensors, for example depth or range finders, image mapping sensors, three-dimensional image capture sensors including capture of images with color perception not limited by human color perception.

Electronic camera and range sensor systems that provide a measure of distance from the system to a target object are known in the art. Many such systems approximate the range to the target object based upon luminosity or brightness information obtained from the target object. Some such systems are passive and respond to ambient light reflected from the target object, while other systems emit and then detect emitted light reflected from the target object. However luminosity-based systems may erroneously yield the same measurement information for a distant target object that happens to have a shiny surface and is thus highly reflective, as for a target object that is closer to the system but has a dull surface that is less reflective.

A more accurate distance measuring system is a so-called time-of-flight (TOF) system. FIG. **1** depicts an exemplary TOF system, as described in U.S. Pat. No. 6,323,942 entitled "CMOS-Compatible Three-Dimensional Image Sensor IC," (2001), which patent is incorporated herein by reference as further background material. TOF system **100** can be implemented on a single IC **110**, without moving parts and with relatively few off-chip components. System **100** includes a two-dimensional array **130** of pixel detectors **140**, each of which has dedicated circuitry **150** for processing detection charge output by the associated detector. In a typical application, array **130** might include 100×100 pixels **230**, and thus include 100×100 processing circuits **150**. IC **110** also includes a microprocessor or microcontroller unit **160**, memory **170** (which preferably includes random access memory (RAM) and read-only memory (ROM)), a high speed distributable clock **180**, and various computing and input/output (I/O) circuitry **190**. Among other functions, controller unit **160** may perform distance to object and object velocity calculations.

Under control of microprocessor **160**, a source of optical energy **120** is periodically energized and emits optical energy via lens **125** toward an object target **20**. Typically the optical energy is light, for example emitted by a laser diode or LED device **120**. Some of the emitted optical energy will be reflected off the surface of target object **20**, and will pass through an aperture field stop and lens, collectively **135**, and will fall upon two-dimensional array **130** of pixel detectors **140** where an image is formed. Each imaging pixel detector **140** measures both intensity or amplitude of the optical energy received, and the phase-shift of the optical energy as it travels from emitter **120**, through distance Z to target object **20**, and then distance again back to imaging sensor array **130**. For each pulse of optical energy transmitted by emitter **120**, a three-dimensional image of the visible portion of target object **20** is acquired.

Emitted optical energy traversing to more distant surface regions of target object **20** before being reflected back toward system **100** will define a longer time-of-flight than radiation falling upon and being reflected from a nearer surface portion of the target object (or a closer target object). For example the time-of-light for optical energy to traverse the roundtrip path noted at **t1** is given by **t1**=2−Z**1**/C, where C is velocity of light. A TOF sensor system can acquire three-dimensional images of a target object In real time. Such systems advantageously can simultaneously acquire both luminosity data (e.g., signal amplitude) and true TOF distance measurements of a target object or scene.

As described in U.S. Pat. No. 6,323,942, in one embodiment of system **100** each pixel detector **140** has an associated high speed counter that accumulates clock pulses in a number directly proportional to TOF for a system-emitted pulse to reflect from an object point and be detected by a pixel detector focused upon that point. The TOF data provides a direct digital measure of distance from the particular pixel to a point on the object reflecting the emitted pulse of optical energy. In a second embodiment, in lieu of high speed clock circuits, each pixel detector **140** is provided with a charge accumulator and an electronic shutter. The shutters are opened when a pulse of optical energy is emitted, and closed thereafter such that each pixel detector accumulates charge as a function of return photon energy falling upon the associated pixel detector. The amount of accumulated charge provides a direct measure of round-trip TOF. In either embodiment, TOF data permits reconstruction of the three-dimensional topography of the light-reflecting surface of the object being imaged.

Many factors, including ambient light, can affect reliability of data acquired by TOF systems. As a result, the transmitted optical energy may be emitted multiple times using different systems settings to increase reliability of the acquired TOF measurements. For example, the initial phase of the emitted optical energy might be varied to cope with various ambient and reflectivity conditions. The amplitude of the emitted energy might be varied to increase system dynamic range. The exposure duration of the emitted optical energy may be varied to increase dynamic range of the system. Further, frequency of the emitted optical energy may be varied to improve the unambiguous range of the system measurements.

U.S. Pat. No. 6,580,496 entitled "Systems for CMOS-Compatible Three-Dimensional Image-Sensing Using Quantum Efficiency Modulation," (2003), discloses a sophisticated system in which relative phase (Φ) shift between the transmitted light signals and signals reflected from the target object is examined to acquire distance Z. Detection of the reflected light signals over multiple locations in a pixel array results in measurement signals that are referred to as depth images. FIG. **2**A depicts a system **100'** according to the '496 patent, in which an oscillator **115** is controllable by microprocessor **160** as A·cos(wt). Emitter **120** transmitted optical energy having low average and peak power in the tens of mW range, which emitted signals permitted use of inexpensive light sources and simpler, narrower bandwidth (e.g., a few hundred KHz) pixel detectors **140'**. Unless otherwise noted, elements in FIG. **2**A with like reference numerals to elements in FIG. **1** may be similar or identical elements.

In system **100'** there will be a phase shift (Φ) due to the time-of-flight (TOF) required for energy transmitted by emitter **120** (S_1=cos(wt)) to traverse distance Z to target object **20**, and the return energy detected by a photo detector **140'** in array **130'**, S**2**=A·cos(wt+(Φ), where A represents brightness of the detected reflected signal and may be measured separately using the same return signal that is received by the pixel detector. FIGS. **2**B and **2**C depict the relationship between phase shift Φ and time-of-flight, again assuming for ease of description a sinusoidal waveform.

The phase shift Φ due to time-of-flight is:

$$\Phi=2\cdot w\cdot Z/C=2\cdot(2\pi f)\cdot Z/C$$

where C is the speed of light 300,000 Km/sec. Thus, distance Z from energy emitter (and from detector array) to the target object is given by:

$$Z=\Phi\cdot C/2w=\Phi\cdot C/\{2\cdot(2\pi f)\}.$$

As noted above, many types of three-dimensional imaging systems are known in the art. It can be important to rapidly analyze the acquired data to discern whether objects are present that may require immediate response. For example, systems such as described in the '496 patent may be used as robotic sensors to determine whether certain objects are nearby whose presence may dictate the immediate shut-down of equipment for safety reasons. Systems including systems described in the '496 patent may be used within a motor vehicle to help the vehicle operator quickly recognize objects whose presence may require immediate response, e.g., braking to avoid hitting pedestrians in the vehicle's path.

What is needed is a method and system useable with existing image acquisition systems to more rapidly and more reliably identify objects within the acquired data whose presence may dictate certain responses. The present invention provides such methods and systems.

SUMMARY OF THE INVENTION

The present invention is usable with systems that acquire depth images, and provides methods and systems to analyze such images. The present invention segments the images to detect shapes or so-called blobs therein to help rapidly identify objects in the acquired image. The present invention can be practiced on depth images, without regard to whether they were acquired with so-called stereographic cameras, laser range sensors, time-of-flight sensors, or with more sophisticated imaging systems, such as time-of-flight systems exemplified by U.S. Pat. No. 6,323,942, or phase-shift systems exemplified by U.S. Pat. No. 6,580,496.

In one aspect, the acquired depth or range image is segmented into groups of objects that are logically connected within the image. For example, intensity-based pixels, perhaps acquired with a conventional camera, may be labeled according to color. More preferably, pixels acquired from a true z-depth measuring system are labeled such that logically connected pixels are assigned the same depth or z-value. Logical connectivity can relate to various characteristics of the acquired image. For example, with an intensity-based image such as acquired by a conventional camera, pixels can be labeled according to color. An image of a human wearing black pants and a red shirt could be separated into two sub-images. However, a problem common with intensity-based images is that if there is occlusion or overlap between objects in the image, the grouping or segmentation may be unsuccessful as there is no true depth perception.

As applied to true z-depth data images, segmenting according to an embodiment of the present invention is such that neighboring pixels in the image that have similar depths are given a common label. As used herein, "blobs" may be constructed from the labeled image, where a "blob" is a group of pixels having the same label. Preferably each blob will correspond to a different object, and blobs can be modeled as primitives of different shapes (e.g., a circle, a rectangle, etc.), or as pre-defined objects, e.g., a motor vehicle, a human, an animal.

Using embodiments of a modified connected component analysis, the present invention can recognize the presence of blobs within an image, to more rapidly correctly characterize the image. In some embodiments, image pixels are pre-grouped into regions of different depth values, preferably using a depth value histogram, which is itself divided into regions. Image cluster centers can then be determined and a depth group value image obtained, in which each pixel is assigned to one of the depth groups. Such modified connected component analysis is then carried out to identify blobs or objects within the image data. Blob classes may be defined for the application at hand, to help rapidly identify objects in the acquired image. For example, when used with a system in a motor vehicle to identify potential driving hazards, one class of blobs may be characterize pedestrians, other vehicles, and the like.

Other features and advantages of the invention will appear from the following description in which the preferred embodiments have been set forth in detail, in conjunction with their accompanying drawings.

BRIEF DESCRIPTION OF THE DRAWINGS

FIG. **1** is a diagram showing a time-of-flight range finding system, according to the prior art;

FIG. **2**A depicts a phase-shift intensity and range finding system, according to the prior art;

FIG. **2**B depicts a transmitted periodic signal with high frequency components transmitted by the system of FIG. **2**A, according to the prior art;

FIG. **2**C depicts the return waveform with phase-delay for the transmitted signal of FIG. **2**B, according to the prior art;

FIG. **3** depicts a generic image-acquisition system provided with a segmenter-image recognizer system, according to an embodiment of the present invention;

FIG. **4**A depicts a depth image comprising three non-adjacent object regions of different depths, showing exemplary segmentation with objects bearing label 1, label 2, and label 3, according to an embodiment of the present invention;

FIG. **4**B depicts a depth image comprising object regions of different depths that are adjacent to each other, with the left

image portion depicting a magnified view of the transition or overlapping object regions, according to an embodiment of the present invention;

FIG. **4**C depicts the depth image of FIG. **4**B, after application of a modified connected component analysis algorithm, according to embodiments of the present invention;

FIG. **5** depicts exemplary pseudocode implementing a two-way neighborhood grouping by which connected black or white pixels are assigned a same black or white label, according to an embodiment of the present invention;

FIG. **6** depicts exemplary pseudocode implementing a modified connected 20 component analysis by which depth values of pixels are implemented and neighboring pixels with similar depth values are assigned a same label, according to an embodiment of the present invention;

FIG. **7** depicts exemplary pseudocode implementing a method in which where pixels are pre-grouped into regions of different depth values using a histogram of depth values, according to an embodiment of the present invention; and

FIG. **8** is an exemplary histogram of the figure of FIG. **4**B, using the procedure depicted in FIG. **7**, according to an embodiment of the present invention.

DETAILED DESCRIPTION OF THE INVENTION

FIG. **3** depicts a three-dimensional imaging system **200'** comprising a depth image data acquisition system **210**, and a segmenter-image recognizer system **220**, according to the present invention. Depth image data acquisition system **210** may be almost any system that acquires images with three-dimensional depth data. As such, system **210** could include time-of-flight systems such as shown in FIG. **1**, phase-shift detection systems such as shown in FIG. **2**A, laser range sensors, and stereographic camera systems, among other. As such, energy emanating from system **200** is drawn with phantom lines to denote that system **200** may not actively emit optical energy but instead rely upon passive optical energy from ambient light.

System **210** may be implemented in many ways and can, more or less, provide a stream of output information (DATA) that includes a measure of distance Z to a target object. Such DATA may include information as to target objects that might not be readily identifiable from the raw information. However, according to the present invention, segmenter-image recognizer system **220** can process the information stream using an algorithmic procedure **240** stored in memory **230**, and executable by a microprocessor **250**. If depth image data acquisition system **210** is implemented according to the systems of FIG. **1** or FIG. **2**A, functions of some or all elements of segmenter-image recognizer system **220** may be provided elsewhere. For example, processing tasks of microprocessor **250** in FIG. **3** may in fact be carried out by microprocessor **160** in FIG. **1** or FIG. **2**A, and/or storage facilities provided by memory **230** in FIG. **3** may be carried out by memory **170** in FIG. **1** or FIG. **2**A.

Referring to FIG. **4**A, assume that data processed by generic system **200** in FIG. **3**A produced image **300**, an image comprising three objects: a person **310**, a vehicle **320**, and background **330**. When software **240** implementing an algorithm according to the present invention is executed, e.g., by microprocessor **250**, segmentation and identification of the data acquired by system **200** is carried out, according to an embodiment of the present invention.

Software **240** carries out segmentation by labeling pixels comprising image **300** such that connected pixels are assigned the same value. Image **300** in FIG. **4**A may be grouped using three labels: person **310** is assigned label 1, vehicle **320** is assigned label 2, and background **330** is assigned label 3. In one embodiment of the present invention, if image **300** is an intensity image, perhaps acquired from a stereographic camera system **210**, pixels comprising the image may be grouped according to color. For example if person **310** is wearing a shirt of one color and pants of another, the image of his body could be separated into an upper segment (the shirt) and a lower segment (the pants), with separate labels assigned to each of these two segments. Note that if occlusions are present in the image, e.g., overlapping objects, segment grouping might be unsuccessful as there is no perception of depth.

Assume now that image **300** in FIG. **4**A has been acquired with a depth image data acquisition system **210** that can acquire true z-depth data, a system such as shown in FIG. **1** or FIG. **3**A, for example. As such, in such acquisition systems, the depth image provides the z-depth value for each pixel comprising the image. Another embodiment of the present invention groups (or segments) portions of the image from such acquisition systems such that neighboring pixels that have similar z-depths are given the same labels. Groups of pixels bearing the same label and that are connected are termed "blobs", where each such blob corresponds to a different object. If image **300** in FIG. **4**A is now considered to be a depth image, then it is evident that person **310** is at a different z-distance from system **200** than is vehicle **320** or background **330**.

According to embodiments of the present invention, once blobs are defined, they may be modeled or quantized into variously shaped primitives, for example, a circle, a rectangle, or as predefined objects, for example, a person, an animal, a vehicle.

Consider further depth image **300** in FIG. **4**A with respect to various embodiments of the present invention. As used herein, a connected component analysis is an imaging method or algorithm by which certain properties and proximities of a pixel are used to group pixels together. For instance, suppose image **300** comprises black and white image pixels. An algorithm or method according to the present invention preferably groups the pixels by labeling connected white or connected black pixels with the same label. A description of such a method as applied to four-neighbor pixel connectivity (e.g., left, right, up, down) will now be given with reference to the exemplary pseudocode depicted in FIG. **5**.

In the embodiment exemplified by the pseudocode of FIG. **6**, a modified connected component analysis is defined in which values of the z-depth pixels are examined. According to this embodiment, pixels are given the same value as neighboring pixels with similar depth values. Without any limitation, the algorithm pseudocode shown in FIG. **6** exemplifies four-connectivity, although of course eight-connectivity or other measure of connectivity could instead be used. By four-connectivity, it is meant that with respect to a given pixel in array **130** or **130'**, the algorithm code will inspect the pixel above in the previous row (if any) and the pixel below in the next row (if any), in defining the potential neighborhood of interest. In the boundary conditions, a default assumption for the property of the missing pixels is made.

As shown in FIG. **6**, z-depth values for a given pixels (r,c for row,column) in the array is tested to see whether its measured z-depth value is within a threshold depth value compared to its left neighbor. If not less than the threshold, the comparison is repeated with its top neighbor. Pixels whose z-depth values are less than the threshold are tentatively labeled as having the same label value. If the tested pixels still exceed the threshold, a new label is generated and assigned to pixel (r,c). Then z-values of the top and the left pixels are

compared. If the z-values are within the threshold, those pixels are labeled as being connected. The test is repeated until pixels in the array are labeled and their connectivities are established. The threshold depth value can be obtained by heuristic methods depending on the type of application.

The method exemplified in the embodiment of FIG. **6** thus partitions the image into connected regions having similar depth properties. In practice, some depth sensors might produce transition pixels when two regions in the depth image are adjacent to each other but have different z-depth values. FIG. **4**B depicts such juxtaposition, with the left-hand portion of the figure providing a zoomed-in depiction of the overlapping transition pixels. As indicated by the overlapping cross-hatching in the zoomed-in region of FIG. **4**B, embodiments of the present invention assign some of the transition pixels depth values in between the depth values associated with the two regions in question. The embodiment of the present invention exemplified by FIG. **6** might combine the two regions through the transition pixels, for example by assigning a common label to the entire superimposed image, as shown in FIG. **4**C. Thus, in FIG. **4**C a single object **2** is defined, comprising the human **310** and the motor vehicle **320**.

FIG. **7** depicts exemplary pseudocode used in an embodiment of the present invention that takes a different approach to overlapping image objects. More specifically, the embodiment represented by the exemplary pseudocode in FIG. **7** implements a modified connected component analysis that uses a derived property for each pixel as belonging to a number of depth groups.

Such grouping is carried out by software **240** obtaining a histogram of the z-depth values. The histogram may be stored in memory **230**, and preferably is divided into regions using a k-means algorithm, which algorithms are known in the art. For instance, the image of FIG. **4**B would have a histogram represented by FIG. **8**, which has two distinguishable regions: a left peak representing person **310** (label 1), and a right peak representing vehicle **320** (label 2).

More specifically, according to one embodiment of the present invention, the histogram is grouped into two regions, whereafter image cluster centers are determined using a known procedure, for example, a k-means algorithm as noted above. As indicated by the exemplary pseudocode of FIG. **7**, a depthGroupValue image may now be obtained, with each pixel being assigned to one of the depth groups. In FIG. **7**, the algorithm of FIG. **6** is modified to use depth group value of a pixel (r,c) instead of its original depth value. FIG. **7** depicts an embodiment of the present invention wherein software **240** (preferably stored in memory **230**) and executed by a microprocessor, e.g., microprocessor **250** outputs data in which pixels are pre-grouped into regions of different depth values.

Thus application of the modified connected component algorithm depicted **5** in FIG. **7** can result in an image as shown in FIG. **4**B, without considering the zoomed-portion of FIG. **4**B.

Applicants' pre-grouping algorithm can encounter difficulty when the image under consideration is a complicated scene having many z-depth regions. In such cases, it is preferable to work on sub-divided regions of the image. For example, in one embodiment of the present invention, pre-grouping of the image can be accomplished by first dividing the image into regions. Without limitation, the image may be divided into several sub-regions, which some or all sub-regions may overlap other sub-regions. In one embodiment, the sub-regions are defined to be rectangles that are equally divided in the image. In this embodiment, pre-grouping is applied within each rectangle, for example (and without limitation) using a k-means algorithm. Next, applicants' connected component analysis is carried out on each sub-region.

The output of the above-described segmentation procedure is a labeled image, for example image **300** shown in FIG. **4**B. "Blobs" may be constructed from the labeled image, a blob being a group of pixels with the same label. The exemplary algorithm procedures described herein preferably are used to locate these blobs within an image. In practice, each blob preferably is modeled according to the application requirements. By way of example and without limitation, blobs can be modeled as rectangles, where pixel start row, start column, end row, and end column are defined by the boundary of the blob. For instance, different colors can be used to display rectangles commensurate with the average depth value of the blob. Perhaps a red color could be used for an object that is near, and a green color used for an object that is far. By way of further example, a human might be modeled as rectangles of specific height and weight. Embodiments of the present invention can then advantageously track objects by noting blob movement from image to image. Such image tracking advantageously yields a result more quickly than if pixel-by-pixel tracking were used, image to image. Understandably, blob tracking can substantially reduce the computational requirements to implement a tracking algorithm according to the present invention.

It is understood that memory **230** may store a variety of pre-defined blobs, appropriate to the intended use of overall system **200**. For example, system **200** may be disposed in a motor vehicle as part of a warning system, to reduce the likelihood of a collision between the motor vehicle and objects. In such application, predefined models may be stored in memory representing large objects such as another motor vehicle, smaller objects such as a human or animal, column-shaped objects such as a sign post or a traffic light pillar. The ability of the present invention to rapidly recognize such objects from depth and image data acquired by system **210** can enable data from system **200** to alert the operator of the motor vehicle containing the system, as indicated in FIG. **3**. If overall system **200** recognizes what the present invention determines to be a human in the path of the motor vehicle containing the system, the data output signal can be used to automatically sound the vehicle's horn, flash headlights, or even to apply the vehicle's brakes.

In other applications, overall system **200** may image occupants of a vehicle containing the system, for example to determine the size of an occupant in the front passenger seat of the vehicle. In such application, memory **230** might store predefined models of objects likely to be in the passenger seat, for example, a large adult, a small adult, a child, a baby, a dog, a package. In an emergency situation, overall system **200** may be used to intelligently deploy an air bag such that the air bag can deploy normally if the object in the front passenger seat is determined from blob analysis to be an adult of suitable size. On the other hand, if overall system **200** determines that from blob analysis that the object in the passenger seat is an infant, the data signal from the overall system may command the air bag not to deploy, where non-deployment is considered the safer alternative for an infant.

The above-described applications must be understood to be merely exemplary. The present invention would also have utility in an intrusion detection system, a factory robotic control system, and so forth.

Modifications and variations may be made to the disclosed embodiments without departing from the subject and spirit of the invention as defined by the following claims.

The invention claimed is:

1. A computing system comprising:

a processor; and

computer storage memory having computer-executable instructions stored thereon which, when executed by the processor, implement a method of three-dimensional ("3D") image analysis, the method comprising:

receiving 3D image data comprising a plurality of points having 3D coordinate information;

pre-grouping points into sub-regions based upon z-depth values by comparing a first z-depth value for a given pixel with a second z-depth value for a neighboring pixel to determine whether a difference between the first z-depth value and the second z-depth value exceeds a threshold that is used to determine whether the given pixel and the neighboring pixel are assigned the same sub-region;

grouping at least some points within a sub-region to form a segment corresponding to a real-world object of interest;

calculating an image cluster center for the segment; and

modeling the segment as a geometric primitive shape.

2. The system of claim 1, wherein the real-world object of interest is a human hand.

3. The system of claim 1, wherein the real-world object of interest is a person's body part.

4. The system of claim 1, wherein the real-world object of interest is a person.

5. The system of claim 1, wherein the image cluster center has an assigned depth value that is an average of depth values assigned to points forming the segment.

6. The system of claim 1, wherein the method further comprises using a time-of-flight 3D camera to capture the 3D image data.

7. One or more computer storage hardware devices having computer-executable instructions embodied thereon that when executed by a computing device perform a method of three-dimensional ("3D") image analysis, the method comprising:

receiving 3D image data comprising a plurality of points having 3D coordinate information;

pre-grouping points into sub-regions by comparing a first z-depth value for a given pixel with a second z-depth value for a neighboring pixel to determine whether a difference between the first z-depth value and the second z-depth value exceeds a threshold that is used to determine whether the given pixel and the neighboring pixel are assigned the same sub-region;

grouping at least some points within a sub-region to form a segment corresponding to a real-world object of interest;

calculating an image cluster center for the segment; and

modeling the segment as a plurality of geometric primitive shapes.

8. The system of claim 7, wherein the sub-regions correspond to an object described by the 3D image data.

9. The system of claim 8, wherein the image cluster center has a depth value equal to an average of depth values of points forming the segment.

10. The system of claim 7, wherein the real-world object of interest is a person.

11. The system of claim 7, where in the real-world object of interest corresponds to part of the person.

12. The system of claim 7, wherein grouping together points into the segment is based upon each point's z-depth value.

13. The system of claim 7, wherein the sub-regions correspond to a predefined object that is first recognized from the 3D image data.

14. A method of object analysis using three-dimensional image data, the method comprising:

receiving 3D image data comprising a plurality of points having 3D coordinate information;

pre-grouping points into sub-regions based upon a histogram record of z-depth values;

grouping at least some points within a sub-region to form a segment corresponding to a real-world object;

calculating an image cluster center for the segment; and

modeling the segment as a plurality of geometric primitive shapes.

15. The method of claim 14, wherein the geometric primitive shapes correspond to a 3D object.

16. The method of claim 14, wherein grouping together at least some points is done based upon their z-depth values and the points are within a number k of neighboring pixels.

17. The method of claim 16, wherein k is selected from a group consisting of k=4 and k=8.

18. The method of claim 14, wherein the image center has a depth value equal to an average of depth values of points forming the segment.

19. The method of claim 14, wherein the 3D image data is received from one or more of an intensity-based system, a time-of-flight system, and a phase-shift z-depth measuring system.

20. The method of claim 14, wherein the 3D image data is received from one or more of an intensity-based system, a time-of-flight system, and a phase-shift z-depth measuring system.

* * * * *