US009452712B1

(12) **United States Patent**
Ng-Thow-Hing et al.

(10) **Patent No.: US 9,452,712 B1**
(45) **Date of Patent: *Sep. 27, 2016**

(54) **SYSTEM AND METHOD FOR WARNING A DRIVER OF A POTENTIAL REAR END COLLISION**

(71) Applicant: **Honda Motor Co., Ltd.**, Tokyo (JP)

(72) Inventors: **Victor Ng-Thow-Hing**, Sunnyvale, CA (US); **Karlin Bark**, Menlo Park, CA (US); **Cuong Tran**, Santa Clara, CA (US); **Timothy Michael Stutts**, Austin, TX (US)

(73) Assignee: **Honda Motor Co., Ltd.**, Tokyo (JP)

(*) Notice: Subject to any disclaimer, the term of this patent is extended or adjusted under 35 U.S.C. 154(b) by 0 days.

This patent is subject to a terminal disclaimer.

(21) Appl. No.: **15/162,836**

(22) Filed: **May 24, 2016**

Related U.S. Application Data

(63) Continuation of application No. 14/506,523, filed on Oct. 3, 2014, now Pat. No. 9,378,644, which is a continuation-in-part of application No. 14/465,049, filed on Aug. 21, 2014, which is a continuation-in-part of application No. 14/463,618, filed on Aug. 19, 2014, now Pat. No. 9,393,870, and a continuation-in-part of application No. 14/460,478, filed on Aug. 15, 2014, now Pat. No. 9,400,385, and a continuation-in-part of application No. 13/832,918, filed on Mar. 15, 2013, now Pat. No. 9,164,281.

(51) **Int. Cl.**

B60Q 1/44	(2006.01)
B60Q 9/00	(2006.01)
G08G 1/16	(2006.01)
G02B 1/00	(2006.01)
G01C 1/00	(2006.01)

(52) **U.S. Cl.**
CPC ***B60Q 9/008*** (2013.01); ***G08G 1/166*** (2013.01); *G01C 1/00* (2013.01); *G02B 1/00* (2013.01)

(58) **Field of Classification Search**
CPC G02B 1/00; G01C 1/00
See application file for complete search history.

(56) **References Cited**

U.S. PATENT DOCUMENTS

5,051,735	A	9/1991	Furukawa
5,115,398	A	5/1992	De Jong

(Continued)

FOREIGN PATENT DOCUMENTS

DE	10130046	1/2003
DE	10131720	1/2003

(Continued)

OTHER PUBLICATIONS

Autoblog, GM's Full-Windshield HUD Technology | Autoblog, YouTube, Mar. 17, 2010, http://www.youtube.com/watch?v=wR5EAGM4-U&feature=youtu.be&t=1m15s.

(Continued)

Primary Examiner — Shirley Lu
(74) *Attorney, Agent, or Firm* — Rankin, Hill & Clark LLP

(57) **ABSTRACT**

A system for indicating braking intensity to a main vehicle has an observational device monitoring positional and speed data of at least one vehicle proximate the main vehicle. A control unit is coupled to the observational device. The control unit processes the positional and speed data monitored by the observational device and generates graphical representations of the at least one vehicle proximate the main vehicle and graphical representations of a braking intensity level of the at least one vehicle proximate the main vehicle.

16 Claims, 5 Drawing Sheets

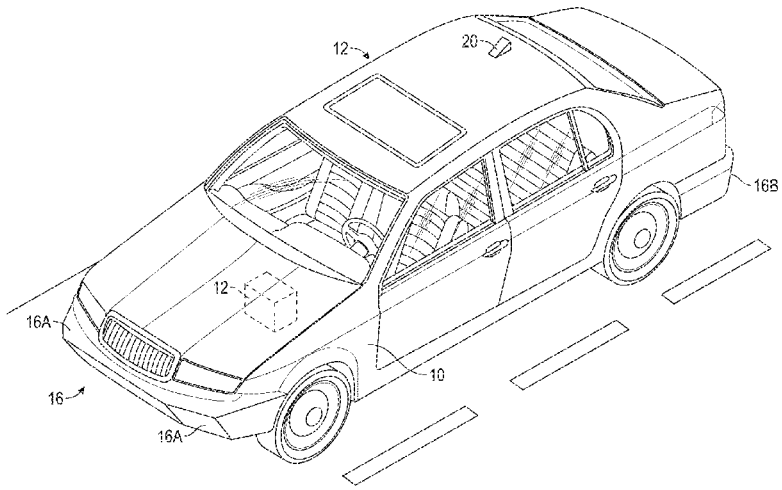

(56) **References Cited**

U.S. PATENT DOCUMENTS

5,368,309	A	11/1994	Monroe et al.	
5,440,428	A	8/1995	Hegg et al.	
5,519,536	A	5/1996	Hoehn	
6,222,583	B1	4/2001	Matsumura et al.	
6,285,317	B1	9/2001	Ong	
6,574,555	B2	6/2003	Mochizuki et al.	
6,708,087	B2	3/2004	Matsumoto	
6,735,517	B2	5/2004	Engelsberg et al.	
6,774,772	B2	8/2004	Hahn	
6,947,064	B1	9/2005	Hahn et al.	
7,124,027	B1	10/2006	Ernst	
7,190,260	B2 *	3/2007	Rast	G08G 1/162 340/467
7,216,035	B2	5/2007	Hortner et al.	
7,379,813	B2	5/2008	Kubota	
7,519,471	B2	4/2009	Shibata et al.	
7,565,230	B2	7/2009	Gardner et al.	
7,627,419	B2	12/2009	Yoshida	
7,647,170	B2	1/2010	Sawaki et al.	
7,783,422	B2	8/2010	Tanaka	
7,815,313	B2	10/2010	Ito et al.	
7,920,102	B2	4/2011	Breed	
8,135,536	B2	3/2012	Matsunaga et al.	
8,208,208	B2	6/2012	Schwab	
8,305,444	B2	11/2012	Hada	
8,352,181	B2	1/2013	Hagiwara	
8,358,224	B2	1/2013	Seder et al.	
8,406,990	B2	3/2013	Barkowski et al.	
8,411,245	B2	4/2013	Lee et al.	
8,620,575	B2	12/2013	Vogt et al.	
8,633,810	B2	1/2014	Luo et al.	
8,633,979	B2	1/2014	Szczerba et al.	
8,660,735	B2	2/2014	Tengler et al.	
8,686,872	B2	4/2014	Szczerba et al.	
8,686,922	B2	4/2014	Breed	
8,725,342	B2	5/2014	Ferguson et al.	
2004/0193347	A1	9/2004	Harumoto et al.	
2005/0004723	A1	1/2005	Duggan et al.	
2005/0071082	A1	3/2005	Ohmura et al.	
2005/0195383	A1	9/2005	Breed et al.	
2006/0116816	A1	6/2006	Chao et al.	
2006/0262140	A1	11/2006	Kujawa et al.	
2007/0087756	A1	4/2007	Hoffberg	
2007/0185644	A1	8/2007	Hirose	
2008/0046150	A1	2/2008	Breed	
2008/0318676	A1	12/2008	Ham	
2009/0005961	A1	1/2009	Grabowski et al.	
2009/0210257	A1	8/2009	Chalfant et al.	
2009/0268946	A1	10/2009	Zhang et al.	
2010/0027768	A1	2/2010	Foskett	
2010/0131188	A1	5/2010	Yeh et al.	
2010/0192110	A1	7/2010	Carter et al.	
2010/0201894	A1	8/2010	Nakayama et al.	
2010/0253349	A1	10/2010	Cork et al.	
2010/0253601	A1	10/2010	Seder et al.	
2010/0274480	A1	10/2010	McCall et al.	
2010/0292886	A1	11/2010	Szczerba et al.	
2010/0332266	A1	12/2010	Tamir et al.	
2011/0018903	A1	1/2011	Lapstun et al.	
2011/0022393	A1	1/2011	Wäller et al.	
2011/0052042	A1	3/2011	Ben Tzvi	
2011/0075257	A1	3/2011	Hua et al.	
2011/0093190	A1	4/2011	Yoon	
2011/0106428	A1	5/2011	Park et al.	
2011/0199376	A1	8/2011	Salemann	
2011/0251768	A1	10/2011	Luo et al.	
2012/0019557	A1	1/2012	Aronsson et al.	
2012/0041632	A1	2/2012	Bordes	
2012/0072105	A1	3/2012	Feyereisen et al.	
2012/0083964	A1 *	4/2012	Montemerlo	G05D 1/0214 701/26
2012/0109521	A1	5/2012	Rothschild	
2012/0154441	A1	6/2012	Kim	
2012/0162255	A1	6/2012	Ganapathy et al.	
2012/0173069	A1	7/2012	Tsimhoni et al.	
2012/0212405	A1	8/2012	Newhouse et al.	
2012/0224060	A1	9/2012	Gurevich et al.	
2012/0249589	A1	10/2012	Gassner et al.	
2012/0283942	A1	11/2012	T'Siobbel et al.	
2012/0310531	A1	12/2012	Agarwal et al.	
2013/0050258	A1	2/2013	Liu et al.	
2013/0083291	A1	4/2013	Smithwick et al.	
2013/0151145	A1	6/2013	Ishikawa	
2013/0261871	A1	10/2013	Hobbs et al.	
2013/0262997	A1	10/2013	Markworth et al.	
2014/0005857	A1	1/2014	Heisterkamp	
2014/0019913	A1	1/2014	Newman et al.	
2014/0036374	A1	2/2014	Lescure et al.	
2014/0063064	A1	3/2014	Seo et al.	
2014/0114845	A1	4/2014	Rogers et al.	
2014/0139524	A1	5/2014	Nilsson et al.	
2014/0267263	A1	9/2014	Beckwith et al.	
2014/0267398	A1	9/2014	Beckwith et al.	
2015/0226570	A1	8/2015	Takei et al.	

FOREIGN PATENT DOCUMENTS

DE	102006008981	8/2007
DE	102012210145	7/2009
DE	102008040467	1/2010
DE	102008042734	4/2010
DE	102009045169	3/2011
DE	102012221762	6/2013
DE	2618108	7/2013
EP	1862988	11/2009
JP	2006309552	11/2006
WO	2010040589	4/2010
WO	2011108091	9/2011

OTHER PUBLICATIONS

MVS California, 2_Working_Demo.mov, YouTube, May 16, 2011, http://www.youtube.com/watch?v=pdtcyaF6bTl.

Website: "BMW Technology Guide: Adaptive Brake Assistant" http://www.bmw.com/com/en/insights/technology/technology_guide/articles/adaptive_brake_assistant.html, printed Oct. 17, 2014.

Website: "Adaptive Cruise Control and Collision Warning with Brake Support" http://corporate.ford.com/doc/Adaptive_Cruise.pdf, Jul. 2012.

Article: Alves, P.R. et al. "Forward Collision Warning Systems Using Heads-up Displays: Testing Usability of Two New Metaphors", Intelligent Vehicles Symposium (IV), 2013 IEEE, pp. 1-6, http://ueeexplore/ieee.org/xpl/login.jsp?tp=&arnumber=6629438&url=htp%3A%2F%2ieeexploreieee.org%2Fstamp%2Fstamp.jsp%3Ftp%3D%26arnumber%3D6629438.

Article: Gray R. et al. "A Comparison of Different Informative Vibrotactile Forward Collision Warnings: Does the Warning Need to Be Linked to the Collision Event?", PloS One, 9(1), e87070, Jan. 27, 2014, http://www.plosone.org/article/info%3Adoi%2F10.1371%2Fjournal.pone.0087070.

Article: Tai et al. "Bridging the Communication Gap: A Driver-Passenger Video Link" dated Apr. 15, 2010, https://www.pervasive.wiwi.uni-due.de/uploads/tx_itochairt3/publications/Bridging_the_Communication_Gap-MC2009-GraceTai_01.pdf.

Website: "Future Car Technologies" dated Dec. 19, 2013, http://www.carcoversdirect.com/car-lovers-resources/fact-friday/future-car-technologies/#.U3uVbPldVJ1.

Office Action of U.S. Appl. No. 13/832,918 dated Jan. 2, 2015.

Office Action of U.S. Appl. No. 13/832,209 dated Jan. 30, 2015, 26 pages.

Office Action of U.S. Appl. No. 13/832,918 dated May 8, 2015, 27 pages.

Office Action of U.S. Appl. No. 13/832,209 dated Jul. 16, 2015, 37 pages.

Office Action of U.S. Appl. No. 14/041,614 dated Aug. 6, 2015, 21 pages.

Office Action of U.S. Appl. No. 14/321,105 dated Sep. 24, 2015, 37 pages.

(56) **References Cited**

OTHER PUBLICATIONS

Office Action of U.S. Appl. No. 14/465,049 dated Nov. 19, 2015, 63 pages.
Search Report of DE Application No. 102014219575.6 dated Dec. 16, 2015, 12 pages.
Examination Report of DE Application No. 102014219575.6 dated Dec. 17, 2015, 10 pages.
Office Action of U.S. Appl. No. 14/041,614 dated Feb. 3, 2016, 45 pages.
Office Action of U.S. Appl. No. 14/460,478 dated Feb. 8, 2016, 70 pages.
Office Action of U.S. Appl. No. 14/463,618 dated Feb. 23, 2016, 58 pages.
Office Action of U.S. Appl. No. 14/465,049 dated Feb. 24, 2016, 31 pages.
Office Action of U.S. Appl. No. 14/321,105 dated Apr. 20, 2016, 37 pages.
Office Action of U.S. Appl. No. 14/460,478 dated Apr. 25, 2016, 18 pages.
Office Action of U.S. Appl. No. 14/856,596 dated Jan. 15, 2016, 36 pages.
Office Action of U.S. Appl. No. 14/465,049 dated Aug. 9, 2016, 27 pages.

* cited by examiner

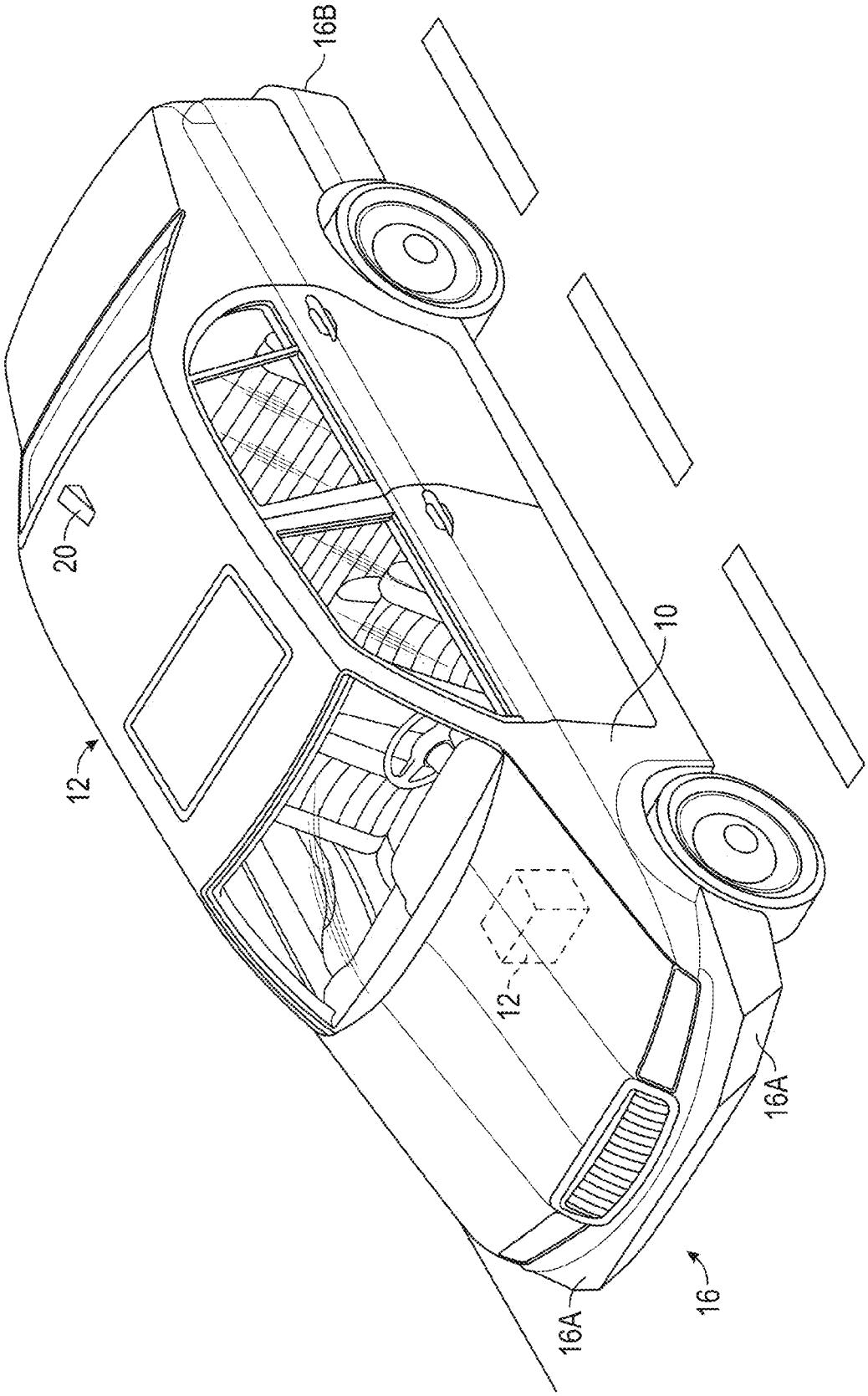

FIG. 1

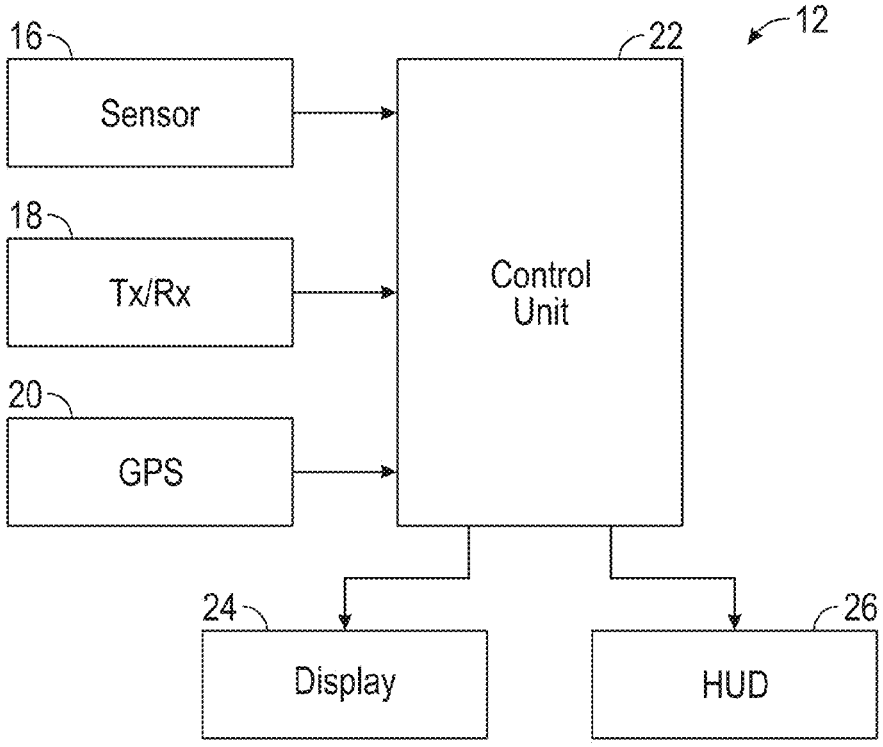
16
Sensor
18
Tx/Rx
20
GPS
22
Control Unit
12
24
Display
26
HUD

FIG. 2

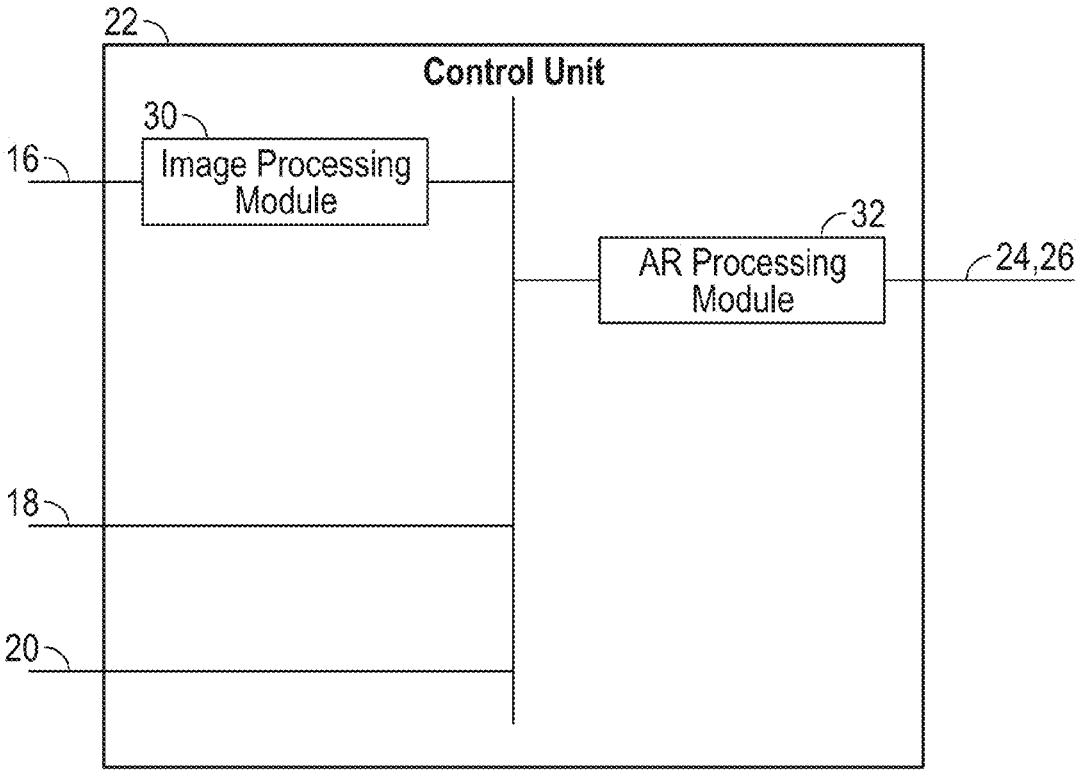
22
Control Unit
30
Image Processing Module
16
32
AR Processing Module
24,26
18
20

FIG. 3

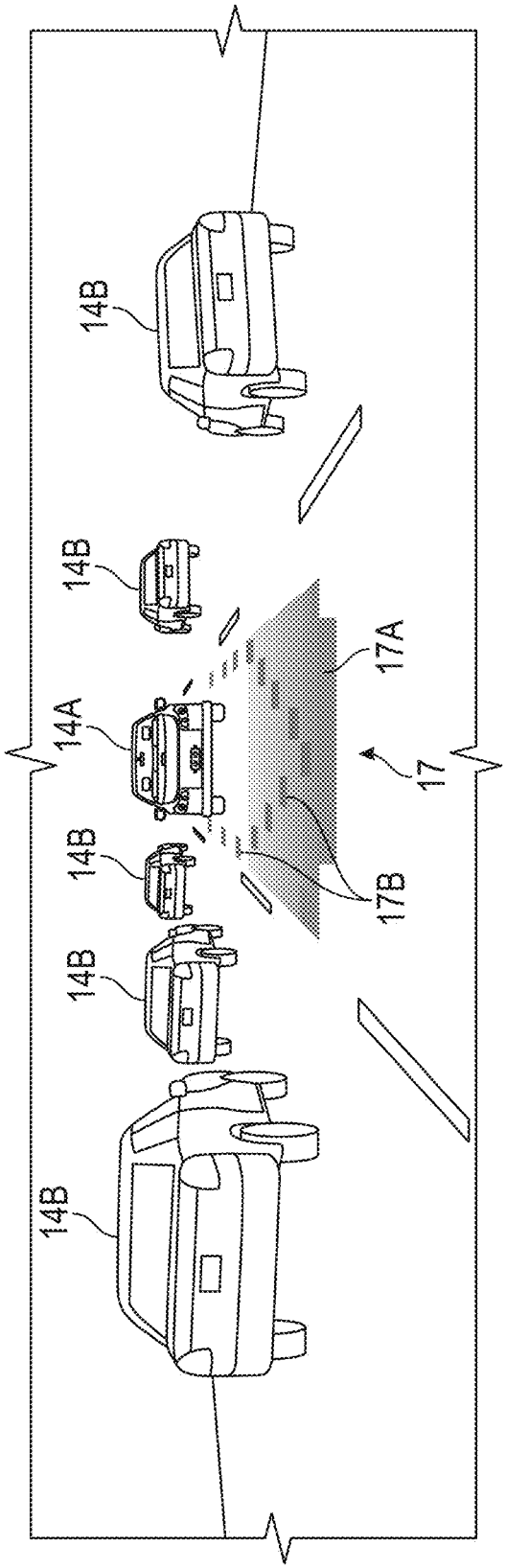

FIG. 4

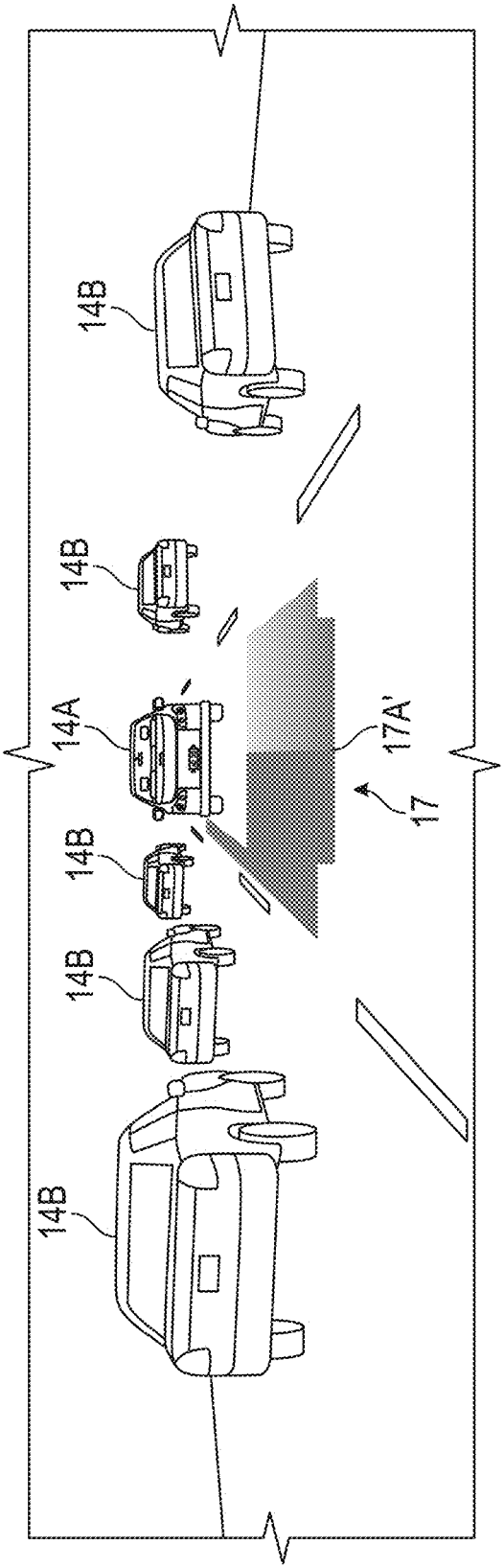

FIG. 5

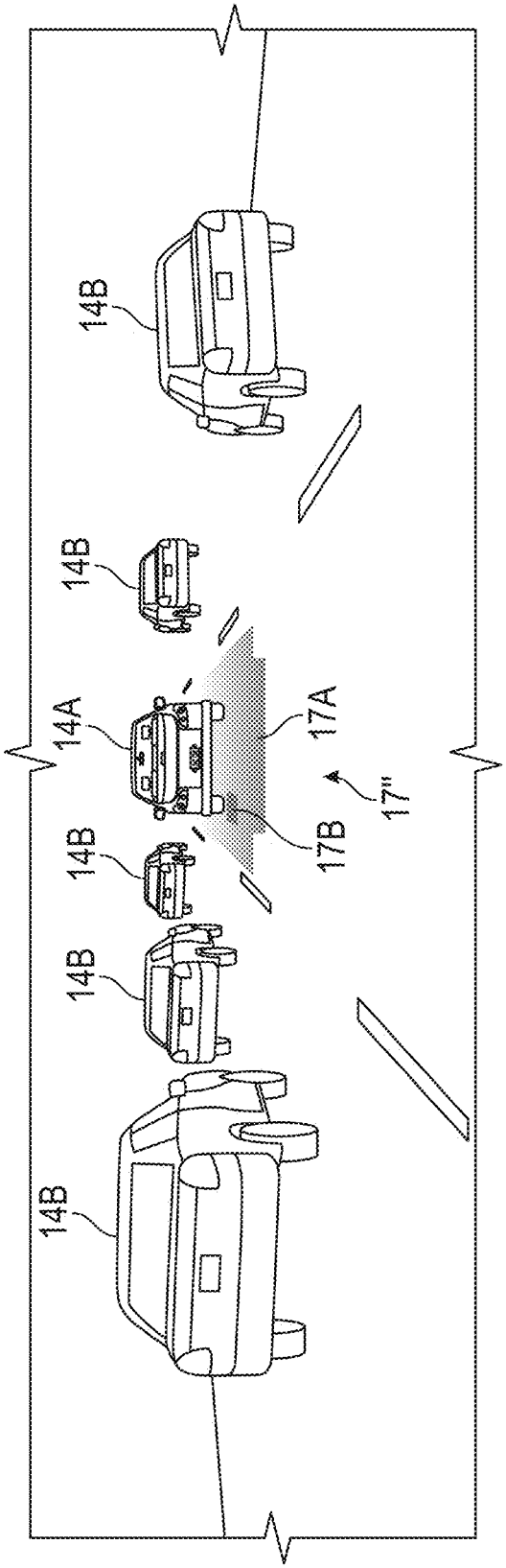

FIG. 6

SYSTEM AND METHOD FOR WARNING A DRIVER OF A POTENTIAL REAR END COLLISION

CROSS-REFERENCE TO RELATED APPLICATIONS

This application is a continuation of and claims priority to U.S. patent application entitled "SYSTEM AND METHOD FOR WARNING A DRIVER OF A POTENTIAL REAR END COLLISION" having Ser. No. 14/506,523, filed Oct. 3, 2014, in the names of Victor Ng-Thow-Hing, Karlin Bark, Cuong Tran, and Timothy Michael Stutts; which is a continuation-in-part of and claims priority to U.S. patent application entitled "INTERPRETATION OF AMBIGUOUS VEHICLE INSTRUCTIONS," having Ser. No. 14/465,049, filed Aug. 21, 2014 in the names of Victor Ng-Thow-Hing, Karlin Bark, and Cuong Tran; which is a continuation-in-part and claims priority to: U.S. patent application entitled "VOLUMETRIC HEADS-UP DISPLAY WITH DYNAMIC FOCAL PLANE," having Ser. No. 14/463,618, filed Aug. 19, 2014 in the names of Victor Ng-Thow-Hing, Tom Zamojdo, and Chris Grabowski; U.S. patent application entitled "VOLUMETRIC HEADS-UP DISPLAY WITH DYNAMIC FOCAL PLANE," having Ser. No. 14/460,478, filed Aug. 15, 2014 in the names of Victor Ng-Thow-Hing, Tom Zamojdo, and Chris Grabowski; and U.S. patent application entitled VOLUMETRIC HEADS-UP DISPLAY WITH DYNAMIC FOCAL PLANE," having Ser. No. 13/832,918, filed Mar. 15, 2013 in the names of Victor Ng-Thow-Hing, Tom Zamojdo, and Chris Grabowski. The entire disclosures of all of the above-mentioned related applications are hereby incorporated herein by reference.

TECHNICAL FIELD

The present application generally relates to a vehicle warning system, and, more particularly, to a system for informing a driver of a braking intensity of a vehicle located in front of the driver and showing alternative paths that the driver may take to avoid a rear end collision.

BACKGROUND

Motorized vehicles may be equipped with various kinds of warning systems. These warning systems may be general warning systems that inform the driver of different operating conditions of the vehicle. For example, vehicles may be equipped with warning systems which may be used to warn the driver of low fuel amounts, high and or low engine temperature, a drop in oil pressure, problems in charging a battery of the vehicle, and doors and or trunks that may be open.

Motorized vehicles may be equipped with more advanced warning systems which may be used to warn the driver of the vehicle about potentially dangerous situations involving other traffic participants. For example, warning systems have been designed for vehicles that may be used to provide a driver with back-up collision warning, blind spot detection, lane-departure warnings, as well as driver-alertness monitoring, assisted parking, traffic sign recognition, and proximity warnings.

While the above systems do provide the driver with warnings of potential dangers, these systems fail to provide information about a braking intensity level of a vehicle located in front of the driver (hereinafter lead vehicle) or

information related to paths that the driver may take in order to avoid a potential rear end collision. Presently, most vehicles have tail lights as well as a third brake light generally located in an upper or lower central area of a rear window of the vehicle. When a driver presses on a brake pedal of the vehicle, the tail lights and third brake light may illuminate in order to warn other vehicles that that the driver is braking. Unfortunately, the tail lights and third brake light may illuminate the same intensity no matter how hard or how lightly the driver is stepping on the brake pedal. Further, the tail lights and third brake light generally do not provide information related to paths that the driver may take to avoid a potential rear end collision.

Other systems, such as proximity warning systems may alert a driver that he is following a lead vehicle too closely. However, these systems generally do not provide information as to a braking intensity of the lead vehicle or provide information related to paths that the driver may take to avoid a potential rear end collision. It would thus be desirable to provide a vehicle warning system that provides information as to braking intensity and/or provides information related to paths that the driver may take to avoid a rear end collision.

SUMMARY

In accordance with one embodiment, a system for indicating braking intensity to a main vehicle has an observational device monitoring positional and speed data of at least one vehicle proximate the main vehicle is provided. A control unit is coupled to the observational device. The control unit processes the positional and speed data monitored by the observational device and generates graphical representations of the at least one vehicle proximate the main vehicle and graphical representations of a braking intensity level of the at least one vehicle proximate the main vehicle.

In accordance with one embodiment, a system for indicating braking intensity to a main vehicle has an observational device monitoring positional and speed data of a plurality of vehicles proximate the main vehicle is provided. A control unit is coupled to the observational device. The control unit processes the positional and speed data monitored by the observational device and generates graphical representations of at least one vehicle of the plurality of vehicles, the at least one vehicle located in front of a driver of the main vehicle, graphical representations of a braking intensity level of a lead vehicle of the plurality of vehicles, the lead vehicle located directly in front of the main vehicle and in a same traffic lane, and graphical representations of an alternate pathway for the main vehicle preventing a possible collision with the lead vehicle. A display is coupled to the control unit. The display shows the graphical representations of the at least one vehicle of the plurality of vehicles located in front of a driver of the main vehicle, graphical representations of the braking intensity level of the lead vehicle of the plurality of vehicles, and graphical representations of an alternate pathway for the main vehicle preventing a possible collision with the lead vehicle.

In accordance with one embodiment, a system for indicating braking intensity to a main vehicle has an observational device monitoring positional and speed data of a plurality of vehicles proximate the main vehicle is provided. A control unit is coupled to the observational device. The control unit processes the positional and speed data monitored by the observational device and generates graphical representations of a first set of vehicles of the plurality of vehicles proximate the main vehicle, the first set of vehicles

located in front of a driver of the main vehicle, graphical representations of a braking intensity level of a lead vehicle of the first set of vehicles, the lead vehicle located directly in front of the main vehicle, wherein the graphical representations indicating the braking intensity of the lead vehicle comprises an indicator, wherein one of a length of the indicator depicts the braking intensity level or a color of the indicator varies to depict the braking intensity level, and graphical representations of an alternate pathway for the main vehicle preventing a possible collision with the lead vehicle, wherein the graphical representations of the alternate pathway comprises a lane indicator, wherein the lane indicator depicts which traffic lane adjacent to the main vehicle is clear for the main vehicle to enter.

BRIEF DESCRIPTION OF DRAWINGS

Embodiments of the disclosure will become more fully understood from the detailed description and the accompanying drawings, wherein:

FIG. **1** is an elevated perspective view of a vehicle implementing an exemplary warning system that may be used to inform a driver of a braking intensity level of a lead vehicle and information related to alternative paths that a driver may take to avoid a potential rear end collision in accordance with an aspect of the present application;

FIG. **2** is a block diagram of the exemplary warning system depicted in FIG. **1** in accordance with an aspect of the present application;

FIG. **3** is an exemplary illustrative control unit of the warning system shown in FIG. **2** in accordance with an aspect of the present application;

FIG. **4** shows one embodiment of an exemplary Augmented Reality (AR) visual generated by the warning system of FIG. **1** in accordance with an aspect of the present application;

FIG. **5** is another embodiment showing an exemplary AR visual generated by the warning system of FIG. **1** in accordance with an aspect of the present application; and

FIG. **6** is another embodiment showing an exemplary AR visual generated by the warning system of FIG. **1** in accordance with an aspect of the present application.

DESCRIPTION OF THE APPLICATION

The description set forth below in connection with the appended drawings is intended as a description of presently preferred embodiments of the disclosure and is not intended to represent the only forms in which the present disclosure can be constructed and/or utilized. The description sets forth the functions and the sequence of steps for constructing and operating the disclosure in connection with the illustrated embodiments. It is to be understood, however, that the same or equivalent functions and sequences can be accomplished by different embodiments that are also intended to be encompassed within the spirit and scope of this disclosure.

Referring to FIG. **1**, an exemplary main vehicle **10** (hereinafter vehicle **10**) which may be equipped with a warning system **12** is shown. The vehicle **10** may be one that is operated entirely by the driver. In an alternative embodiment, the vehicle **10** may be an autonomous vehicle that, at least some of the time, uses a computerized system to control the motion of the vehicle **10** according to certain voice commands given by a human passenger. The warning system **12** may be used to enhance a driver's awareness of a braking intensity of one or more vehicles located in front of the vehicle **10**. The vehicle located directly in front of the vehicle **10** may be labeled as a lead vehicle. In accordance with one embodiment, the lead vehicle may be positioned directly in front of the vehicle **10** and within the same traffic lane as the vehicle **10**. The warning system **12** may be configured to display and/or project an indicator that communicates, to the driver/passenger, information regarding the braking intensity of the lead vehicle. Additional indicators may be shown which may communicate, to the driver/passenger, information regarding the braking intensity of other vehicles located proximate the vehicle **10**. For example, the indicator may communicate the braking intensity of other vehicles located in front of the vehicle **10** but not in the same lane as the vehicle **10**. The indicator of the warning system **12** may also communicate, to the driver/passenger, alternative paths that the vehicle **10** may take to avoid a rear end collision with the lead vehicle or any other surrounding vehicles as will be described below.

Referring now to FIGS. **1** and **2**, the warning system **12** may have a plurality of sensors **16**. The sensors **16** may be positioned around a perimeter area of the vehicle **10**. In the embodiment shown in FIG. **1**, the sensors **16** may be configured to be mounted within the body of the vehicle **10** such as in a front and/or rear bumper of the vehicle **10**. However, this is only shown as an example and should not be seen in a limiting manner. The sensors **16** may be located in other areas of the vehicle **10** and may be mounted in other parts of the vehicle **10**.

A first set of sensors **16**A may be located in a front area of the vehicle **10**. The first set of sensors **16**A may be used to capture data of one or more vehicles located in front of the vehicle **10**. The sensors **16**A may capture data regarding the position of one or more vehicles located in front of the vehicle **10** and data regarding the deceleration and/or braking activity of the one or more vehicles in front of the vehicle **10**. The sensors **16**A may be cameras, image sensing devices, radar or similar type devices. The above-mentioned types of sensors **16**A are given as an example and should not be seen in a limiting manner.

The warning system **12** may have a second set of sensors **16**B. In the embodiment shown in FIG. **1**, the second set of sensors **16**B may be positioned towards a rear area of the vehicle **10**. However, this is shown as an example and the second set of sensors **16**B may be positioned in other areas of the vehicle **10**. The second set of sensors **16**B may be used to capture data regarding the position of one or more vehicles located proximate the vehicle **10**. In addition to capturing positional data, the sensors **16**B may capture deceleration and/or braking activity of the vehicles positioned around the vehicle **10** as well. The positional data or the positional and speed data captured by the second set of sensors **16**B may be used to determine if the vehicle **10** may change lanes when driving in order to avoid a rear end collision.

In accordance with one embodiment, the sensors **16**B may be part of an existing vehicle system. For example, the sensors **16**B may be part of a Blind Spot Information (BSI) system of the vehicle **10**. In this embodiment, the sensors **16**B may be adjusted to monitor a wider field of view.

The sensors **16**B may be cameras, image sensing devices, radar or similar type devices. The above-mentioned types of sensors **16**B are given as an example and should not be seen in a limiting manner.

Alternatively, instead of using sensors **16**A and/or **16**B or in addition to the sensors **16**A and/or **16**B, the vehicle **10** may obtain data related to the one or more vehicles located around the vehicle **10** through the use of vehicle-to-vehicle (V2V) communications. V2V communications may allow

dynamic wireless exchange of data between nearby vehicles. Thus, vehicle related data such as location, speed, and other data may be transmitted from the one or more vehicles located around the vehicle **10** to the warning system **12**. By monitoring the speed of the one or more vehicles located around the vehicle **10**, the system **12** may determine how fast or slowly these vehicles are decelerating, and thereby determine the braking intensity of these vehicles.

If the warning system **12** uses V2V communications, the warning system **12** may have a transmitter/receiver unit **18**. The transmitter/receiver unit **18** may be used to receive vehicle related data such as location and speed from the one or more vehicles located around the vehicle **10**, as well as transmit vehicle related data such as location and speed of the vehicle **10** to other vehicles located around the vehicle **10**.

The warning system **12** may have a Global Positioning Satellite (GPS) unit **20**. The GPS unit **20** may be used to determine the location and speed of the vehicle **10**. This data may be transmitted through the transmitter/receiver unit **18** to vehicles located around the vehicle **10**.

The sensors **16**A and **16**B may be coupled to a control unit **22**. The control unit **22** may take and process the data captured by the sensors **16**A and **16**B. The control unit **22** may process the data in order to detect and identify the position of the one or more vehicles located around the vehicle **10** as well as the speed of the one or more vehicles located around the vehicle **10**. By monitoring how fast or how slowly the one or more vehicles located around the vehicle **10** decelerate, the control unit **22** may determine a braking intensity for the one or more vehicles located in front of the vehicle **10**. For example, the faster a vehicle decelerates, the harder the braking intensity for that vehicle. If the vehicle is slowly decelerating, then the barking intensity for that vehicle would be lighter.

Alternatively, if the warning system **12** uses V2V communications, the transmitter/receiver **18** may be coupled to the control unit **22**. The control unit **22** may take and process the vehicle related data such as location and speed from the lead vehicle, as well as other vehicles proximate the vehicle **10**, received from the transmitter/receiver **18**. The control unit **22** may process the data in order to detect and identify the lead vehicle and the other surrounding vehicles. The control unit **22** may identify the position of the lead vehicle and surrounding vehicles as well as the speed of the lead vehicle and surrounding vehicles. By monitoring how fast or how slow the lead vehicle and the other surrounding vehicles are, the control unit **22** may determine a braking intensity for the lead vehicle and surrounding vehicles. For example, the faster a vehicle decelerates, the harder the braking intensity for that vehicle. If the vehicle is slowly decelerating, then the barking intensity for that vehicle would be lighter.

The control unit **22** may take and process the data received from the sensors **16**A and **16**B and/or the data received through the transmitter/receiver **18** via the V2V communications and generate graphical representations of the lead vehicle and a braking intensity of the lead vehicle if the lead vehicle is decelerating. The control unit **22** may take and process the data and generate graphical representations of other vehicles located in front of the vehicle **10** and a braking intensity of these other vehicles located in front of the vehicle **10** if the vehicles located in front of the vehicle **10** are decelerating. The control unit **22** may generate graphical representations of alternative paths that the vehicle **10** may take, if any, to avoid a potential rear end collision with the lead vehicle **14** or any other vehicles proximate the vehicle **10**.

The warning system **12** is a dynamic system. The control unit **22** may continuously update graphical representations of the different vehicles and the braking intensities captured by the sensors **16**A and **16**B and/or received through the transmitter/receiver **18** via the V2V communications. Thus, for example, as the vehicle **10** is in motion and as the lead vehicle brakes, accelerates, and changes position in relation to the vehicle **10**, the graphical representations of the lead vehicle and the braking intensity of the lead vehicle may be continuously updated. Graphical representations indicating alternative paths that the vehicle **10** may take to avoid a potential rear end collision with the lead vehicle or any other surrounding vehicles may also be continuously updated as the lead vehicle and any other surrounding vehicles change position in relation to the vehicle **10**.

The control unit **22** may be coupled to a display **24**. The display **24** may be used to show the graphical representations generated by the control unit **22**. Thus, the display **24** may show graphical representations of the lead vehicle and other surrounding vehicles captured by the sensors **16**A and **16**B and/or received through the transmitter/receiver **18** via the V2V communications. The display **24** may show graphical representations of the braking intensity of the lead vehicle and or other vehicles as well as graphical representations indicating alternative paths that the vehicle **10** may take to avoid a potential rear end collision with the lead vehicle or any other surrounding vehicles. Alternatively, the control unit **22** may be coupled to a Heads-Up Display (HUD) system **26**. The HUD system **26** may be used to display the above mentioned graphical representations generated by the control unit **22**.

The warning system **12** may be configured so that the display **24** and/or HUD system **26** displays the general area viewable in front of the driver when the driver is seated in the vehicle **10** (hereinafter Field of View (FOV) of the driver). However, for other surrounding vehicles detected by the sensors **16**B but not in the FOV of the driver or towards a far edge of the FOV, for example a vehicle located behind or to the side of the vehicle **10**, symbols and or warning text and a string indicating a general position of the surrounding vehicle may be generated and shown on the display **24** and or HUD system **26**.

Referring now to FIG. **3**, a block diagram of the control unit **22** may be seen. The control unit **22** may have an image processing module **30**. The image processing module **30** may be coupled to the sensors **16**A, **16**B. The image processing module **30** may process the data from the sensors **16**A, **16**B in order to identify the lead vehicle and surrounding vehicles detected by the sensors **16**A, **16**B. In accordance with one embodiment, the image processing module **30** may be able to identify and distinguish the lead vehicle that is directly in front of and within the same traffic lane as the vehicle **10** from other vehicles that are ahead of the vehicle **10** but that are in a different lane than the vehicle **10**. The image processing module **30** may be able to identify vehicles surrounding the vehicle **10** and whether the vehicle **10** may be able to switch lanes to avoid a possible collision with the lead vehicle or other vehicle located in front of the vehicle **10**.

The image processing module **30** may be used to monitor the speed of the lead vehicle and other vehicles that are ahead of the vehicle **10** but that are in a different lane than the vehicle **10**. By monitoring the speed and seeing if there is a decelerating in speed, the image processing module **30**

may calculate a rate of deceleration or a braking intensity of the lead vehicle or other vehicles located in front of the vehicle **10**.

An Augmented Reality (AR) processing module **32** of the control unit **22** may be used to generate graphical representations of the lead vehicle and vehicles located in front of the vehicle **10**, graphical representations of a braking intensity of the lead vehicle when the lead vehicle is braking, and graphical representations indicating the alternative paths that the vehicle **10** may take to avoid a rear end collision with the lead vehicle or any other surrounding vehicles. In accordance with one embodiment, the Augmented Reality (AR) processing module **32** may be used to generate graphical representations of the lead vehicle and vehicles located in front of the vehicle **10**, graphical representations of a braking intensity of the lead vehicle and other vehicles located in front of the vehicle **10** when one or more of these vehicles are braking, and graphical representations indicating the alternative paths that the vehicle **10** may take to avoid a rear end collision with the lead vehicle or any other surrounding vehicles.

The AR processing module **32** may generate the above graphical representations based on the date processed by the image processing module **30**. If the system **12** is using V2V communications, the data received from the transmitter/receiver **18** may be used either alone or in combination with the date processed by the image processing module **30** to generate the above graphical representations. The graphical representations generated by the AR processing module **32** may be two dimensional representations or three dimensional representations. The graphical representations generated by the AR processing module **32** may be shown on the HUD system **26** or, alternatively, on a display **24** located within the vehicle **10**.

Referring now to FIG. **4**, an exemplary embodiment of an augmented reality generated and displayed by the warning system **12** may be seen. The augmented reality shown may be the FOV in front of the driver when the driver is seated in the vehicle **10**. The exemplary embodiment may illustrate when a lead vehicle **14**A is braking. The AR may allow multiple focal points allowing the projected graphical representation to move towards and away from the driver's FOV.

The control unit **22** may generate one or more graphical representations illustrating a braking intensity of the lead vehicle **14**A monitored by the sensors **16**A and or through the V2V communications. In the present embodiment, the lead vehicle **14**A and five surrounding vehicles **14**B may be seen as being in the FOV of the driver. To communicate to the driver that the lead vehicle **14**A is braking, an indicator **17** may appear behind and/or partially around the lead vehicle **14**A. In the embodiment shown in FIG. **4**, the indicator **17** may include a bar **17**A, a plurality of dashed bars **17**B outlining a geometric shape, or other similar markings (referred to generically as indicator **17**). The indicator **17** may include just the bar **17**A, just the plurality of dashed bars **17**B or a combination of the bar **17**A and plurality of dashed bars **17**B to indicate whether the lead vehicle **14** is braking and the intensity with which the lead vehicle **14** is braking. The indicator **17** may be colored (e.g. red) so as to draw the driver's attention to the indicator **17** and of a potential collision. The indicator **17** may flash and/or blink to further draw the driver's attention to the indicator **17**.

In accordance with one embodiment, the shape and/or color of the indicator **17** may vary based on the intensity with which the lead vehicle **14** is braking. For example, a length of the bar **17**A, or length of the geometric shaped formed by the plurality of dashed bars **17**B may indicate the braking intensity. The longer the length of the bar **17**A, or length of the geometric shaped formed by the plurality of dashed bars **17**B, the harder braking intensity of the lead vehicle **14**A. Alternatively, or in addition to the above, the color of the bar **17**A, or the plurality of dashed bars **17**B may indicate the braking intensity. For example, the darker the color of the bar **17**A or dashed bars **17**B, the harder braking intensity of the lead vehicle **14**A.

As shown in FIG. **4**, the bar **17**A appears long and appears solid in color initially and then gradually becomes lighter in color. This may communicate to the driver that the lead vehicle **14** braked hard initially (dark solid portion of the bar **17**A), began to ease up on the brake (slightly transparent portion of the bar **17**A), and then let go of the brake (completely transparent portion of the bar **17**A).

The projections **17** may indicate to the driver whether an alternative path exists for the driver to safely swerve into in order to avoid a potential rear end collision with the lead vehicle **14**. As shown in FIG. **5**, the bar **17**A' may be seen as being long and solid in color which may communicate to the driver that the lead vehicle **14** is braking hard and is continuing to brake hard. A right side portion of the bar **17**A' may be seen as being lighter and/or more transparent in color than a left side portion of the bar **17**A'. This may communicate to the driver that the right side of the road may be clear if the driver needs to swerve to avoid a potential rear end collision with the lead vehicle **14**A and that the left side of the road may be obstructed by another vehicle or object.

Referring now to FIG. **6**, another embodiment may be seen as to how the projections **17** may indicate to the driver whether an alternative path exists for the driver to safely swerve into in order to avoid a potential rear end collision with the lead vehicle **14**. In FIG. **6**, the bar **17**A" may be seen as being more transparent in color and shorter in comparison to the bar **17**A of FIG. **4** and the bar **17**A' of FIG. **5**. The bar **17**A" is slightly transparent, which may indicate to the driver that the lead vehicle **14** is braking normally. A projection **17**B" may be shown near the left side portion of the bar **17**A", which may communicate to the driver that the right side of the road is clear if the driver needs to swerve to avoid a rear end collision with the lead vehicle **14** and that the left side of the road is obstructed by another vehicle or object.

The above embodiment are shown as examples of how the color intensity of the indicator **17** (solid versus transparent and gradations in between) and shape (long versus short and gradations in between) may vary according to the intensity with which the lead vehicle **14** is braking and may also vary according to which alternate path may be available, if any, for the vehicle **10** to swerve into in order to avoid a potential rear end collision with the lead vehicle **14**. In alternative embodiments, different colors may be used to indicate braking intensity. For example, the indicator **17** may appear green if the lead vehicle **14** is braking normally, yellow if the lead vehicle **14** is braking harder but poses no threat to the vehicle **10**, and appear red if the lead vehicle **14** is braking hard and poses a threat to the vehicle **10**. As another example, the color green could be used to indicate a safe alternate path that the vehicle **10** may take to avoid a rear end collision with the lead vehicle **14** and the color red could be used to indicate that an alternate path is blocked and cannot be used by the vehicle **10** to avoid the collision. In other embodiments, the light pattern of the bar **17**A may vary depending upon the intensity with which the lead vehicle **14** is braking.

While embodiments of the disclosure have been described in terms of various specific embodiments, those skilled in the art will recognize that the embodiments of the disclosure may be practiced with modifications within the spirit and scope of the claims.

What is claimed is:

1. A system for indicating braking intensity to a main vehicle comprising:

an observational device monitoring positional and speed data of at least one vehicle proximate the main vehicle; and

a control unit coupled to the observational device processing the positional and speed data monitored by the observational device and generating graphical representations of the at least one vehicle proximate the main vehicle, graphical representations of a braking intensity level of the at least one vehicle proximate the main vehicle, and graphical representations of an alternate pathway for the main vehicle preventing a possible collision with the at least one vehicle proximate the main vehicle, wherein the graphical representations of the alternate pathway comprises a lane indicator, wherein the lane indicator illustrates which traffic lane adjacent to the main vehicle is clear for the main vehicle to enter.

2. The system of claim 1, wherein the lane indicator is positioned on a side of the traffic lane adjacent to the main vehicle that is unsafe to change.

3. The system of claim 1, wherein the graphical representations indicating the braking intensity of the at least one vehicle proximate the main vehicle comprises an indicator, wherein a length of the indicator depicts the braking intensity level.

4. The system of claim 1, wherein the graphical representations indicating the braking intensity of the at least one vehicle proximate the main vehicle comprises an indicator, wherein a color of the indicator varies depicting the braking intensity level.

5. The system of claim 1, wherein the observational device comprises a plurality of monitoring sensors coupled to the main vehicle and the control unit for monitoring at least one of position or speed of the at least one vehicle proximate the main vehicle.

6. The system of claim 1, wherein the observational device comprises a vehicle to vehicle (V2V) communication system wirelessly communicating speed and positional data between the main vehicle and the at least one vehicle proximate the main vehicle.

7. The system of claim 1, comprising a display coupled to the control unit showing the graphical representations of the at least one vehicle proximate the main vehicle and the graphical representations of the braking intensity level of the at least one vehicle proximate the main vehicle.

8. The system of claim 1, comprising a heads up display (HUD) coupled to the control unit showing the graphical representations of the at least one vehicle proximate the main vehicle and the graphical representations of the braking intensity level of the at least one vehicle proximate the main vehicle.

9. A system for indicating braking intensity to a main vehicle comprising:

an observational device monitoring positional and speed data of at least one vehicle proximate the main vehicle;

a control unit coupled to the observational device processing the positional and speed data monitored by the observational device and generating graphical representations of the at least one vehicle proximate the main vehicle, graphical representations of a braking intensity level of the at least one vehicle proximate the main vehicle, and graphical representations of an alternate pathway for the main vehicle preventing a possible collision with the at least one vehicle proximate the main vehicle, wherein the graphical representations of the alternate pathway comprises a lane indicator, wherein the lane indicator illustrates which traffic lane adjacent to the main vehicle is clear for the main vehicle to enter; and

a display coupled to the control unit showing the graphical representations of the at least one vehicle proximate the main vehicle and the graphical representations of the braking intensity level of the at least one vehicle proximate the main vehicle.

10. The system of claim 9, wherein the graphical representations indicating the braking intensity of the at least one vehicle proximate the main vehicle comprises an indicator, wherein a length of the indicator depicts the braking intensity level.

11. The system of claim 9, wherein the graphical representations indicating the braking intensity of the at least one vehicle proximate the main vehicle comprises an indicator, wherein a color of the indicator varies illustrating the braking intensity level.

12. The system of claim 9, wherein the observational device comprises a plurality of monitoring sensors coupled to the main vehicle and the control unit monitoring at least one of position or speed of the at least one vehicle proximate the main vehicle.

13. The system of claim 9, wherein the observational device comprises a vehicle to vehicle (V2V) communication system wirelessly communicating speed and positional data between the main vehicle and the at least one vehicle proximate the main vehicle.

14. A system for indicating braking intensity to a main vehicle comprising:

an observational device monitoring positional and speed data of at least one vehicle proximate the main vehicle; and

a control unit coupled to the observational device processing the positional and speed data monitored by the observational device and generating graphical representations of the at least one vehicle proximate the main vehicle, graphical representations of a braking intensity level of the at least one vehicle proximate the main vehicle, wherein the graphical representations indicating the braking intensity of the at least one vehicle proximate the main vehicle comprises an indicator, wherein one of a length of the indicator depicts the braking intensity level or a color of the indicator varies to depict the braking intensity level, and graphical representations of an alternate pathway for the main vehicle preventing a possible collision with the at least one vehicle proximate the main vehicle, wherein the graphical representations of the alternate pathway comprises a lane indicator and the lane indicator is positioned on a side of a traffic lane adjacent to the main vehicle that is unsafe to change.

15. The system of claim 14, wherein the observational device comprises a plurality of monitoring sensors coupled to the main vehicle and the control unit monitoring at least one of position or speed of the at least one vehicle proximate the main vehicle.

16. The system of claim 14, wherein the observational device comprises a vehicle to vehicle (V2V) communication system wirelessly communicating speed and positional data between the main vehicle and the at least one vehicle proximate the main vehicle.

* * * * *