US009186610B2

(12) **United States Patent**
Woolard et al.

(10) **Patent No.: US 9,186,610 B2**
(45) **Date of Patent: Nov. 17, 2015**

(54) **ROOMSIDE REPLACEABLE FAN FILTER UNIT**

(71) Applicant: **CAMFIL USA, INC.**, Riverdale, NJ (US)

(72) Inventors: **Keith G. Woolard**, Washington, NC (US); **Sean O'Reilly**, West Palm Beach, FL (US)

(73) Assignee: **CAMFIL USA, INC.**, Riverdale, NJ (US)

(*) Notice: Subject to any disclaimer, the term of this patent is extended or adjusted under 35 U.S.C. 154(b) by 48 days.

(21) Appl. No.: **13/795,304**

(22) Filed: **Mar. 12, 2013**

(65) **Prior Publication Data**

US 2014/0260981 A1 Sep. 18, 2014

(51) **Int. Cl.**

B01D 50/00	(2006.01)
B01D 46/00	(2006.01)
B01D 46/10	(2006.01)
B01D 46/52	(2006.01)

(52) **U.S. Cl.**

CPC ***B01D 46/0086*** (2013.01); ***B01D 46/10*** (2013.01); ***B01D 46/521*** (2013.01); *B01D 2273/18* (2013.01)

(58) **Field of Classification Search**

None

See application file for complete search history.

(56) **References Cited**

U.S. PATENT DOCUMENTS

4,193,778	A *	3/1980	Strahsner et al.	96/313
4,411,675	A *	10/1983	de Castella	96/140
5,620,503	A *	4/1997	Miller et al.	95/211
5,702,648	A	12/1997	White et al.	
6,267,793	B1	7/2001	Gomez et al.	
6,312,504	B1 *	11/2001	Both et al.	95/214
6,367,278	B1	4/2002	Strussion et al.	
6,368,393	B1 *	4/2002	Hironaka	96/111
6,387,165	B1 *	5/2002	Wakamatsu	96/270
6,517,612	B1	2/2003	Crouch et al.	
7,210,363	B2 *	5/2007	Morse et al.	73/863.23
7,220,291	B2	5/2007	Morse et al.	

(Continued)

OTHER PUBLICATIONS

Flanders Filters, Inc., Fan Filter Specification, Jan. 24, 2012.

(Continued)

Primary Examiner — Duane Smith

Assistant Examiner — Phillip Shao

(74) *Attorney, Agent, or Firm* — Patterson & Sheridan, LLP

(57) **ABSTRACT**

Embodiments described herein relate to roomside replaceable fan filter units. In one embodiment, a roomside replaceable fan filter unit includes a housing having a filter receiving aperture and an air inlet, an aerosol injector, and a fan filter unit. The fan filter unit is coupled to the housing between the aerosol injector and the filter receiving aperture. In another embodiment, a roomside replaceable fan filter unit includes a housing having a sidewalls and a top wall that define an interior volume, an air inlet formed in the top wall, and a filter receiving aperture disposed opposite the top wall. The roomside replaceable fan filter unit also includes a fan filter unit disposed in the interior volume between the air inlet and the filter receiving aperture. The roomside replaceable fan filter unit includes an aerosol injector disposed upstream of the fan filter unit in the interior volume.

18 Claims, 3 Drawing Sheets

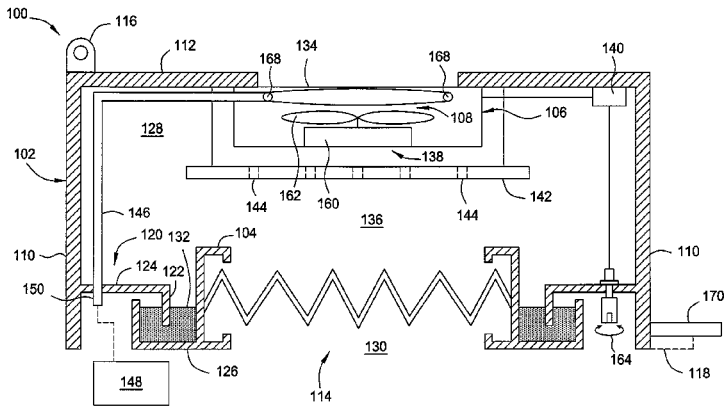

(56) **References Cited**

U.S. PATENT DOCUMENTS

7,320,721	B2 *	1/2008	Ham et al.	55/498
7,971,857	B1	7/2011	Mazza	
2003/0205038	A1	11/2003	Goyetche	
2006/0112757	A1	6/2006	Morse	
2006/0272301	A1	12/2006	Morse et al.	
2006/0276120	A1	12/2006	Cherry, Sr. et al.	
2011/0011268	A1 *	1/2011	Lee et al.	96/371
2012/0246910	A1	10/2012	Morse et al.	

OTHER PUBLICATIONS

Flanders Filters, Inc., TH Series UL 900 Class 1, Factory Mutual Approved, Truly Separatorless Filter Modules, 2013, Bulletin: PB1500-0511.

American Air Filter Company, Inc., FM2-LE Self-Contained Energy Efficient Fan/Filter Modules for Cleanroom Applications, May 2010.

PCT international search report and written opinion of PCT/US14/10141 dated Apr. 16, 2014.

* cited by examiner

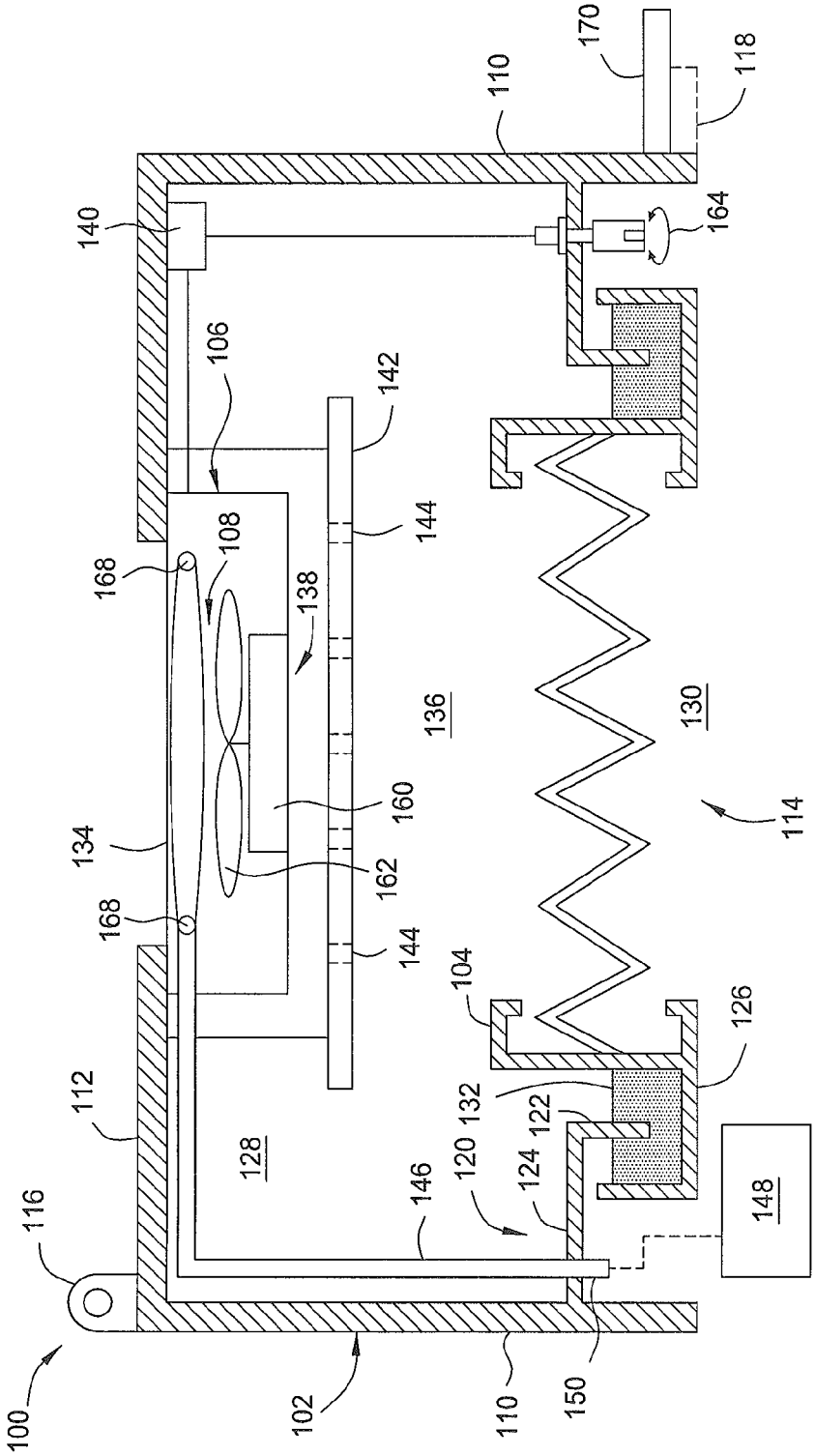
100
102
104
106
108
110
112
114
116
118
120
122
124
126
128
130
132
134
136
138
140
142
144
146
148
150
160
162
164
168
170

FIG. 1

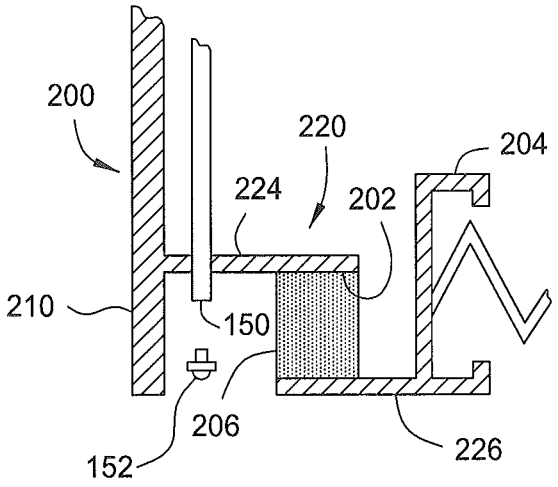
200
220
204
224
202
210
150
206
226
152

FIG. 2

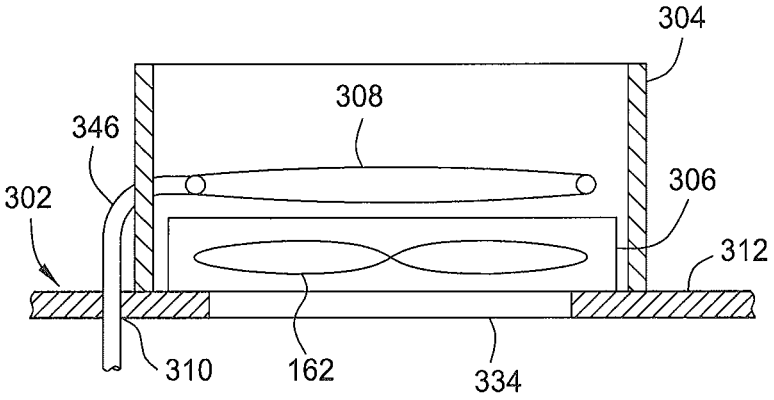
304
308
346
306
302
312
310
162
334

FIG. 3

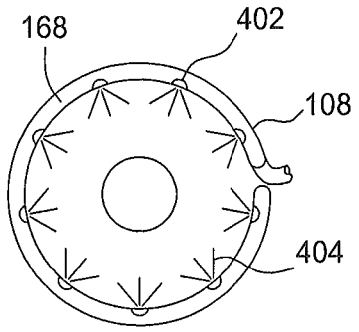
168
402
108
404

FIG. 4

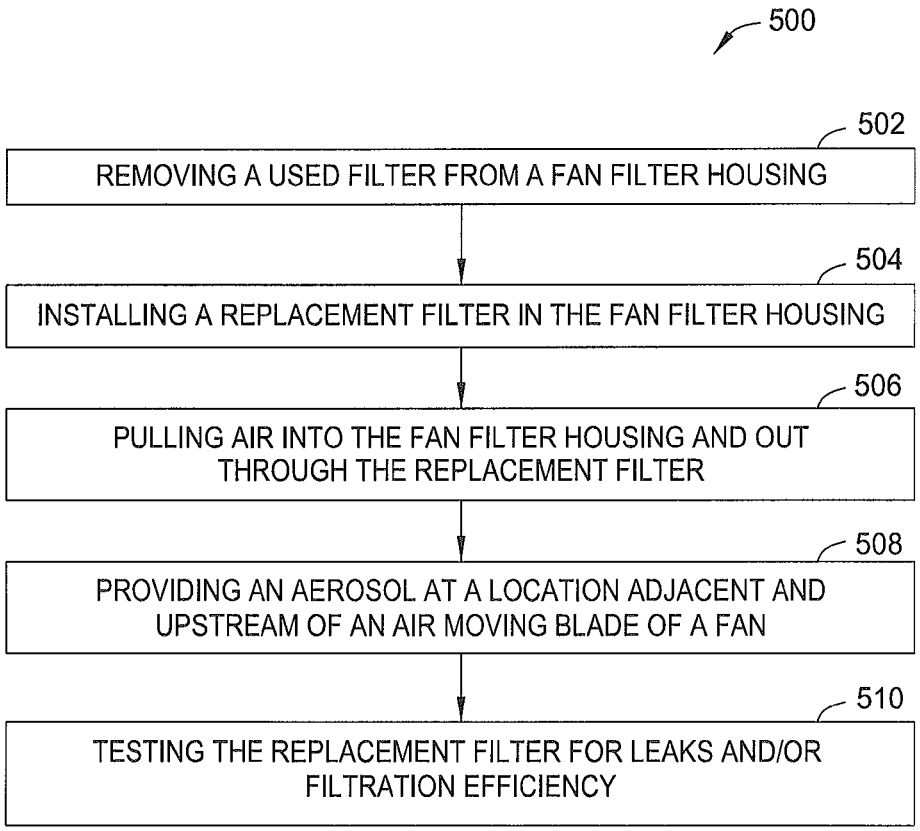
500
502
REMOVING A USED FILTER FROM A FAN FILTER HOUSING
504
INSTALLING A REPLACEMENT FILTER IN THE FAN FILTER HOUSING
506
PULLING AIR INTO THE FAN FILTER HOUSING AND OUT THROUGH THE REPLACEMENT FILTER
508
PROVIDING AN AEROSOL AT A LOCATION ADJACENT AND UPSTREAM OF AN AIR MOVING BLADE OF A FAN
510
TESTING THE REPLACEMENT FILTER FOR LEAKS AND/OR FILTRATION EFFICIENCY

FIG. 5

ROOMSIDE REPLACEABLE FAN FILTER UNIT

BACKGROUND OF THE INVENTION

1. Field of the Invention

Embodiments described herein relate to roomside replaceable fan filter units. More particularly, embodiments described herein relate to a roomside replaceable fan filter unit with an aerosol injection ring.

2. Description of the Related Art

Cleanrooms are utilized in many industries, for example pharmaceutical manufacturing facilities or biotechnology research labs, where clean space is a manufacturing or health-related requirement. A plurality of filters, typically mounted in the ceiling of the cleanroom as roomside replaceable filter units, are configured to remove particulate from air entering the cleanroom at a predetermined efficiency selected based upon the cleanliness requirements of the activities performed in the cleanroom.

The performance of the filters disposed in the roomside replaceable filter units is critical to for providing contaminant-free or hazardous-free air. Therefore, it is necessary to certify the performance (e.g., leak and/or filtration efficiency) of the filters by field testing on at least an annual basis to determine whether the filters are maintaining the proper filter efficiency. The certification process ensures that the filters are meeting predefined operations criteria and/or standards.

Typically a certification process includes challenging the filters with an upstream aerosol challenge to perform statistically valid tests. Most cleanrooms are configured to have a common plenum feeding multiple roomside filter units. In order to test one filter, enough aerosol must be provided to the entire plenum to have a sufficient uniform concentration for testing the filter. As such, large quantities of aerosol are needed to create a uniform concentration of aerosol within the plenum. The large quantity of aerosol needed to test a single filter is not only wasteful, but also undesirably loads the interested filters in communication with the plenum. Additionally, an undesirably high usage of aerosol, a long period of time is required to adequately charge and stabilize the aerosol concentration within the plenum, which undesirably reduces the availability of the clean room for normal operations.

Thus, there is a need for an improved roomside replaceable filter unit and method for testing filters used in the same.

SUMMARY OF THE INVENTION

Embodiments described herein relate to roomside replaceable fan filter units. In one embodiment, a roomside replaceable fan filter unit includes a housing, an aerosol injector, and a fan module. The housing has a filter receiving aperture adapted to receive a filter and an air inlet. The fan module is coupled to the housing and includes an air moving blade disposed between the aerosol injector and the filter receiving aperture.

In another embodiment, a roomside replaceable fan filter unit includes a housing having a plurality of sidewalls and a top wall that define an interior volume, an air inlet formed in the top wall, and a filter receiving aperture disposed opposite the top wall and adapted to receive a replaceable air filter. The roomside replaceable fan filter unit also includes a fan module disposed in the interior volume between the air inlet and the filter receiving aperture. The roomside replaceable fan filter unit further includes an aerosol injector coupled to the housing and disposed upstream of an air moving blade of the fan module.

In another embodiment, a method for utilizing a replaceable fan filter unit comprising an aerosol injector includes replacing a used filter from the fan filter unit with a replacement filter. The method also includes pulling air into a housing of the replaceable fan filter unit and pushing air out through the replacement filter by a fan module. The method further includes providing an aerosol challenge to the air through an aerosol injector coupled to the housing, wherein the aerosol injector is disposed upstream of an air moving blade of a fan module.

BRIEF DESCRIPTION OF THE DRAWINGS

So that the manner in which the above recited features of the present invention can be understood in detail, a more particular description of the invention, briefly summarized above, may be had by reference to embodiments, some of which are illustrated in the appended drawings. It is to be noted, however, that the appended drawings illustrate only typical embodiments of this invention and are therefore not to be considered limiting of its scope, for the invention may admit to other equally effective embodiments.

FIG. **1** is a sectional view of one embodiment of a roomside replaceable fan filter unit;

FIG. **2** is a partial sectional view of an alternative embodiment of a sealing section of a filter housing;

FIG. **3** is a partial sectional view of an alternative location for a fan module of a roomside replaceable fan filter unit;

FIG. **4** is a top view of one embodiment of an aerosol injector; and

FIG. **5** is a flow diagram of one embodiment of a method for utilizing a roomside replaceable fan filter unit having an integral aerosol injection ring.

To facilitate understanding, identical reference numerals have been used, wherever possible, to designate identical elements that are common to the figures. It is contemplated that elements of one embodiment may be beneficially incorporated in other embodiments without further recitation.

DETAILED DESCRIPTION

FIG. **1** depicts a sectional view of one embodiment of a roomside replaceable fan filter unit (fan filter unit **100**) having a fan module **106** and an aerosol injector **108** integrated into a single unit that may be installed in a structure **170**, such as a ceiling, wall or floor of a room, a machine enclosure, mini-environment or other surface bounding an area requiring delivery of filtered air. The integral aerosol injector **108** is located to provide aerosol into the airstream upstream of at least air moving blades of the fan module **106**. The location of the integral aerosol injector **108** advantageously allows a single filter to be challenged for testing without having to provide aerosol to other filters as currently done in conventional applications. The fan filter unit **100** includes a filter housing **102** to which the fan module **106** and aerosol injector **108** are mounted. The filter housing **102** a plurality of sidewalls **110** and a top wall **112** that define an interior volume **136**. The side of the sidewalls **110** opposite the top wall **112** terminate in a filter receiving aperture **114** configured to receive a replaceable filter **104**. In one embodiment, the filter **104** may be a high-efficiency particulate air (HEPA) filter or an ultra-low penetration air filter, or any other suitable filter. The filter receiving aperture **114** is sized to allow the filter **104** to at least partially enter the housing **102**, thereby allowing the filter **104** to be removed and replaced from the housing **102** as needed. The top wall **122** includes an inlet **134** which allows airs to enter the interior volume **136** of the filter housing **102**

prior to flowing through the filter **104** and out of the filter housing **102** through the filter receiving aperture **114**.

The sidewalls **110** and the top wall **112** of the filter housing **102** are generally fabricated from a rigid material, for example a metal material, such as aluminum or stainless steel. Other rigid materials suitable for fabricating the sidewalls **110** and the top wall **112** of the filter housing **102** include materials such as plastic, wood-based products, and glass reinforced plastic, among others. The sidewalls **110** are generally configured in a polygonal form, such as a square or rectangle. The sidewalls **110** are sealingly coupled together at their intersections, for example, by welding, riveting, soldering, adhering, bonding, caulking and the like. The top wall **112** is generally coupled to the sidewalls **110** in a similar fashion to make the filter housing **102** leak-tight.

In one embodiment, the sidewalls **110** and/or the top wall **112** includes a mounting pad or tab **116** that facilitates coupling the filter housing **102** to a supporting structure (not shown) for disposing the fan filter unit **100** above a room, such as a cleanroom. In some locations, the tab **116** is required as a seismic restraint.

In another embodiment, a flange **118** (shown in phantom) may extend outwards from the sidewalls **110** to interface with the structure **170**. The flange **118** may be coupled and/or sealed to the structure **170**. The flange **118** may be caulked or sealed with a gasket to the structure **170**.

A sealing element **120** extends from the sidewalls **110** into the interior volume **136** adjacent the filter receiving aperture **114**. The sealing element **120** provides a substantially air-tight seal between the filter **104** and the housing **102**. In one embodiment, the sealing element **120** includes a knife edge **122** that is coupled to sidewall **110** by a sealing flange **124**. The knife edge **122** and the sealing flange **124** may be fabricated from a single piece of material to prevent air by-pass, and may also be fabricated with the sidewall **110** as a continuous piece of material as shown in FIG. **1**, for example, as an extrusion. The knife edge **122** is orientated substantially parallel to the sidewalls **110** and is configured to interface with a sealing face **126** disposed at one end the filter **104** to create an air-tight seal between the filter housing **102** and the filter **104** upon installation of the filter **104** into the filter housing **102**. Thus, the sealing element **120** separates the interior volume **136** of the filter housing assembly **102** into a plenum **128** defined between the sealing element **120** and the top wall **112** that is upstream of the filter **104** and a filter receiving portion **130** in which the filter **104** mounts. In other words, the filter **104** interfacing with the sealing element **120** separates the unfiltered air disposed in the plenum **128** defined upstream of the filter **104** with the clean, filtered air, downstream of the filter **104**.

In the embodiment depicted in FIG. **1**, the sealing face **126** includes a trough **132** circumscribing the perimeter of the filter **104**. The trough **132** is at least partially filled with a gel, such as silicone or polyurethane gel. As the filter **104** is move into the filter receiving portion **130**, the knife edge **122** of the housing **102** penetrates the gel to create an air seal between the filter **104** and the filter housing **102**. The filter **104** is secured in the filter housing **102** in a position that ensures engagement between the sealing face **126** and sealing element **120** by a filter retainer, such as a pawl tab (not shown) mounted to the sealing flange **124**. The filter retainer may alternatively be a screw, nut, clip, quarter turn fastener or other element suitable for releasably retaining the filter **104** in the housing **102**.

FIG. **2** depicts a partial sectional view a housing **200** illustrating an alternative sealing element **220** which may be utilized to form the fan filter unit **100**. Sidewalls **210** of the housing **200** are generally similar to the sidewalls **110** described above with reference to FIG. **1**. The sealing element **220** includes a sealing flange **224** that extends perpendicularly inward from the sidewall **210** to provide a planar gasket seating surface **202**. A filter **204** having a gasket **206** disposed on top of a portion of a sealing face **226** is urged against the sealing flange **224**, thereby compressing the gasket **206** against the sealing flange **224** to provide a seal between the housing **200** and filter **204**. It is contemplated that the gasket **206** may be alternatively coupled to the sealing flange **204** of the housing **200**.

Referring back to FIG. **1**, the fan module **106** is coupled to the filter housing **102**. In one embodiment, the fan module **106** is mounted at least partially or completely inside the interior volume **136** of the filter housing **102**. The fan module **106** is configured to draw air through the inlet **134** of the filter housing **102** and into the plenum **128**, the air ultimately flowing through the filter **104** and into the room downstream of the filter **104**. The fan module **106** includes a fan **138** and a controller **140**. The fan **138** includes a motor **160** and blades **162** for moving the air. The controller **140** is configured to control the operational speed of the fan **138** so that the amount of air flowing through the filter housing **102** and out the filter **104** may be set as desired. In the embodiment seen in FIG. **1**, the controller **140** is located internally on the filter housing **102**. However, it is contemplated that the controller **140** may be located in any suitable location, either coupled to, or remotely from, the housing **102**.

The controller **140** may includes a fan speed adjustment control **164** exposed to the roomside of the filter housing **102** so that the speed of the fan **138** may be easily set. For example, the fan speed adjustment control **164**, such as a control knob, may sealingly penetrate through the sealing flange **124** in a location accessible between the installed filter **104** and the sidewalls **110** of the filter housing **102**. It is contemplated that the adjustment control **164** may be located in other locations, either attached or remote from the housing **102**, and that in some embodiments, the speed of the fan **138** may be set electronically without the use of a manual adjustment (e.g., adjustment control knob **164**), for example, by using a remotely located computing device or other remote controller.

In another embodiment, a fan module **306** may be mounted externally on the filter housing **302** as illustrated in FIG. **3**. The fan module **306** is generally similar to the fan module **106** described above with reference to FIG. **1**. In one embodiment, at least one of the housing **302** or the fan module **306** includes an optional collar **304** that is configured to mate with ductwork (not shown) that provides air to an inlet **334** formed through a top wall **312** of the filter housing **302**.

Referring back to FIG. **1**, the filter housing **102** may optionally include a diffuser plate **142** disposed in the interior volume **136**. The diffuser plate **142** is generally a baffle utilized to redirect airflow within the plenum **128**. In one embodiment, the diffuser plate **142** is positioned in the plenum **128** below the fan module **106** and is configured to enhance the uniform distribution of air within the plenum **128** to enhance flow uniformity exiting the filter **104**.

The diffuser plate **142** may be fabricated from a metal or plastic material. The diffuser plate **142** may be a solid sheet or may be perforated. The diffuser plate **142** may also be planar, conical, curved or have another form. In the embodiment depicted in FIG. **1**, the diffuser plate **142** includes optional apertures **144** to allow at least some air to flow therethrough.

The aerosol injector **108** is utilized to introduce an aerosol challenge within the filter housing **102** upstream of the filter **104**. The aerosol injector **108** is positioned upstream of the air

moving blades **162** of the fan module **106**, for example, on a side of the fan module **106** opposite the sealing element **120**. The aerosol injector **108** may be positioned inside or upstream of the fan module **106**. By positioning the aerosol injector **108** upstream of the air moving blades **162** of the fan module **106**, the blades **162** of the fan module **106** contribute to uniformly mixing the aerosol in the air entering the plenum **128**, thereby allowing a smaller plenum **128** and in some cases, eliminating the need for diffuser plate **142**, which allows smaller housing side walls **210**, thereby reducing the size and cost of the filter housing **102**. Additionally, as each fan filter unit **100** has its own aerosol injector **108**, a single filter may be challenged for testing without having to provide aerosol to other filters as currently done in plenum ceiling applications, thereby providing a significant reduction in the amount of aerosol utilized and without unnecessarily loading filters not currently undergoing test with aerosol which reduces filter life.

The aerosol injector **108** includes one or more ports or nozzles (shown as **402** in FIG. **4**) which are positioned to dispense aerosol into the airstream entering the housing **102** through the fan module **106**. In one embodiment, the aerosol injector **108** includes a tube **168** positioned inside the filter housing **102** between the inlet **134** and the fan module **106**. In one embodiment depicted in FIGS. **1** and **4**, the aerosol injector **108** is tube **168** formed in a ring and having a plurality of ports **402**. In one embodiment, the ports **402** are distributed around the tube **168**, for example in a polar array. This beneficially provides a uniform distribution of the aerosol through the ports **402** and into the filter housing **102**. The ports **402** formed in the aerosol injector **108** have an orientation which directs a spray **404** of aerosol into the filter housing **102** such that the spray is directed into the airstream rather than against a solid surface. In one embodiment, the ports **402** are oriented at an inward angle (e.g., towards the centerline of the inlet **134** of the filter housing **102**), as shown in FIG. **4**. However, in other embodiments, the ports **402** may be oriented at an upward, downward or outward angle. The fan module **106** moves the aerosol laden air into the plenum **128**. As discussed above, the action of the blades **162** of the fan module **106**, along with the optional diffuser plate **142** and/or other baffles provide adequate aerosol mixing of the aerosol laden air so that filter leak-testing may be performed. In one example, the fan module **106** provides sufficient mixing to allow ANSI or IEST leak-testing protocols to be performed, which will be discussed below further in detail.

An aerosol delivery tube **146** is routed through the plenum **128** of the filter housing **102**. The aerosol delivery tube **146** is coupled to the aerosol injector **108**. The aerosol delivery tube **146** terminates at an aerosol access port **150** accessible from the roomside, e.g., filter receiving aperture side, of the housing **102**. In one embodiment, the aerosol access port **150** extends through the sealing flange **124** of the housing **102**. The aerosol access port **150** is utilized to connect the aerosol injector **108** to an aerosol generator **148**. It is contemplated, however, that the aerosol access port **150** may be positioned on other parts of the filter housing **102**. The aerosol access port **150** is generally sealable, either through an internal check valve or with a stopper **252**, as illustrated removed from the port **150** in FIG. **2**. The aerosol generator **148** is utilized to supply an aerosol challenge to the upstream side of the filter **104** in the plenum **128** to enable a statistically valid test of the filter **104**.

Injecting aerosol directly at the inlet **134** into the fan filter unit **100** advantageously reduces the amount of aerosol required for field testing, increases the uniformity of aerosol distribution adjacent the filter, and also allows field certifying technicians to accurately meet leak-testing protocols from roomside of the housing **102**. Since the aerosol is provided to the aerosol access port **150** of a specific fan filter unit **100**, each fan filter unit **100** can be tested individually from the roomside of the housing **102** without interrupting the normal operation of adjacent fan filter units **100**. In one embodiment, the aerosol is injected between the between the inlet **134** and the fan module **106** on upstream of the filter **104**. Since the aerosol is injected in a distributed manner across the air stream prior to encountering the spinning fan blades **162**, the blades **162** more thoroughly mix the aerosol so that the air distributed inside the plenum **128** of the housing **102** has a much more uniform distribution of aerosol concentration than if only one point of aerosol injection (e.g., a single nozzle) was utilized.

The above described aerosol injection process ensures that the filter **104** is uniformly challenged across its plan area with substantially the same aerosol concentration. This uniform mixture beneficially ensures that the filter **104** can be accurately scan tested. To ensure the filter **104** is being challenged with a uniform aerosol laden air mixture, it is important to conduct factory qualification testing in accordance with industry accepted standards and test methods. An exemplary standard is IEST-RP-CC0034.2, HEPA and ULPA Filter Leak Tests, which requires that the airstream on the upstream side of the tested filter **104** be sampled in multiple locations and analyzed for uniformity. The standard sets parameters for the testing and pass/fail criteria. In one embodiment, during qualification testing of the fan filter unit **100**, various methods of injecting aerosol were trialed, but the methods described herein gave a consistent uniform air-aerosol challenging mixture.

Comparative Results

A first method of injecting aerosol used a simple single point injecting location at a center of an inlet of the fan module within a mult-port aerosol injector. This method gave inconsistent results, because the injected aerosol stream followed inlet air streamlines to one side of the centerline of the fan module, and thus the aerosol was unevenly distributed inside the fan filter unit plenum. The highest challenge concentration of the aerosol corresponded to a side of the fan module in which the aerosol streamlined. Moving the injection point of the aerosol eccentrically off center of the inlet of the fan module did not improve the results. Although the injection point was directly over the center of the inlet of the fan module, the aerosol still streamlined inconsistently to various sides of the inlet of the fan module.

The next method to trial was to use the multi-port aerosol injector **108** to evenly distribute the aerosol into the inlet of the fan module **106** by injecting aerosol in multiple locations around the perimeter of the fan module **106**, as discussed above. This method allowed the aerosol to follow the streamlines of the inlet of the fan module **106**, however, allowed multiple streamlines to be challenged with the same volume of aerosol. This resulted in a much more uniform aerosol laden air mixture upstream of the filter **104**. The test results for this injection method showed beneficial results.

For example, using IEST-RP-CC034.2 testing standards, a 100 mm pleat height MEGALAM® panel filter was tested at: (i) 485 cubic feet/min, (ii) 540 cubic feet/min, and (iii) 600 cubic feet/min with an upstream aerosol concentration of approximately 50 micrograms/liter using 10 sampling points that were located at various locations across the upstream face of the filter **104**. The results respectively indicated: (i) an average concentration of 53 micrograms/liter at the sampling points with a standard deviation of 3 and a relative standard deviation of 0.05, (ii) an average concentration of 49 micrograms/liter at the sampling points with a standard deviation of 3 and a relative standard deviation of 0.07, and (iii) an average concentration of 56 micrograms/liter at the sampling points with a standard deviation of 4 and a relative standard devia-

tion of 0.07, wherein the relative standard deviation acceptance criteria is less than 0.20.

In another example using IEST-RP-CC034.2 testing standards, a 50 mm pleat height MEGALAM® panel filter was tested at: (i) 485 cubic feet/min, (ii) 540 cubic feet/min, and (iii) 600 cubic feet/min with an upstream aerosol concentration of approximately 50 micrograms/liter using 10 sampling points that were located at various locations across the upstream face of the filter **104**. The results respectively indicated: (i) an average concentration of 51 micrograms/liter at the sampling points with a standard deviation of 1 and a relative standard deviation of 0.03, (ii) an average concentration of 52 micrograms/liter at the sampling points with a standard deviation of 2 and a relative standard deviation of 0.04, and (iii) an average concentration of 52 micrograms/liter at the sampling points with a standard deviation of 2 and a relative standard deviation of 0.04, wherein the relative standard deviation acceptance criteria is less than 0.20.

Referring back to FIG. **3**, an aerosol injector **308** may be positioned above the fan module **306**, for example, in the collar **304**. The aerosol injector **308** is coupled by a tube **346** to the aerosol access port **150** (not shown in FIG. **3**). The aerosol injector **308** and tube **346** are generally similar to the aerosol injector **108** and tube **346** described above with reference to FIG. **1**. The tube **346** may be routed either completely within the housing **302** or at least partially outside the housing **302**. In the embodiment depicted in FIG. **3**, the tube **346** is coupled to the aerosol injection ring **308**, then runs external to the filter housing **302** prior to entering the housing **302** through an opening **310**. The tube **346** may be sealed by a o-ring, gasket or caulk to the housing **302** to form an airtight seal at the opening **310**.

FIG. **5** is a flow diagram of one embodiment of a method **500** for utilizing a roomside replaceable fan filter unit having an integral aerosol injector ring. At step **502**, a used filter is removed from the fan filter unit housing installed in a structure, such as a ceiling of a clean room, mini-environment, machine enclosure or other boundary of a clean space. At step **504**, a replacement air filter is installed in housing. At step **506**, a fan pulls air into housing and out through the replacement filter. At step **508**, an aerosol challenge is provided to the air flowing in the housing by the integral aerosol injector ring at a location adjacent and upstream of an air moving blade of the fan. At step **510**, the replacement filter is tested for leaks and/or filtration efficiency by measuring the aerosol content at a location downstream of the replacement filter.

While the foregoing is directed to embodiments of the invention, other and further embodiments of the invention may be devised without departing from the basic scope thereof, and the scope thereof is determined by the claims that follow.

The invention claimed is:

1. A roomside replaceable fan filter unit comprising:

a housing having an air inlet and a filter receiving aperture, wherein the filter receiving aperture is adapted to sealingly engage a filter and is oriented to expose the filter disposed in the filter receiving aperture to a roomside of a structure to which the housing is mounted;

an aerosol injector; and

a fan filter unit coupled to the housing, an air moving blade of the fan filter unit disposed between the aerosol injector and the filter receiving aperture.

2. The roomside replaceable fan filter unit of claim **1**, wherein the housing comprises:

a plurality of sidewalls and a top wall that define an interior volume.

3. The roomside replaceable fan filter unit of claim **2**, wherein the fan filter unit is disposed at least partially in the interior volume.

4. The roomside replaceable fan filter unit of claim **2**, wherein the fan filter unit is disposed at least partially outside of the interior volume.

5. The roomside replaceable fan filter unit of claim **1**, wherein a collar configured to mate with ductwork is coupled to one of the housing and fan filter unit.

6. The roomside replaceable fan filter unit of claim **5**, wherein the aerosol injector is disposed in the collar.

7. The roomside replaceable fan filter unit of claim **1**, wherein the aerosol injector is a tube.

8. The roomside replaceable fan filter unit of claim **1**, wherein the aerosol injector is a ring.

9. The roomside replaceable fan filter unit of claim **1**, wherein the aerosol injector comprises a plurality of holes.

10. The roomside replaceable fan filter unit of claim **9**, wherein the plurality of holes face radially inward towards a centerline of the air inlet.

11. The roomside replaceable fan filter unit of claim **1**, wherein the housing comprises an aerosol injection port coupled to the aerosol injector, and wherein the aerosol injection port is accessible from a side of the housing having the filter receiving aperture.

12. The roomside replaceable fan filter unit of claim **11**, wherein the aerosol injection port is disposed through a sealing element of the housing-configured to sealingly engage the filter disposed in the filter receiving aperture.

13. The roomside replaceable fan filter unit of claim **1**, wherein a filter is disposed in the filter receiving aperture.

14. A roomside replaceable fan filter unit comprising:

a housing comprising:

a plurality of sidewalls and a top wall that define an interior volume;

an air inlet formed in the top wall;

a filter receiving aperture disposed opposite the top wall and adapted to sealingly engage a filter and is oriented to expose the filter to a roomside of a structure to which the housing is mounted;

a fan filter unit disposed between the air inlet and the filter receiving aperture; and

an aerosol injector disposed upstream of an air moving blade of the fan filter unit.

15. The roomside replaceable fan filter unit of claim **14**, further comprising:

an aerosol delivery tube coupled to the aerosol injector, wherein the aerosol delivery tube comprises an aerosol access port accessible from outside of the housing.

16. The roomside replaceable fan filter unit of claim **14**, wherein the aerosol injector is disposed in the fan filter unit.

17. The roomside replaceable fan filter unit of claim **1**, wherein a diffuser plate is disposed between the fan filter unit and the filter receiving aperture.

18. The roomside replaceable fan filter unit of claim **1**, wherein the filter is replaceable from the roomside of the filter receiving aperture.

* * * * *