US009051110B2

(12) **United States Patent**
**Gatto et al.**

(10) **Patent No.: US 9,051,110 B2**
(45) **Date of Patent: Jun. 9, 2015**

(54) **PACKAGING FOR MEDICINE FOR CLINICAL TRIALS OR COMMERCIAL USE**

(71) Applicant: **Celgene Corporation**, Summit, NJ (US)

(72) Inventors: **Michael Gatto**, Rockaway, NJ (US); **Lisa MacNeir**, Clinton, NJ (US)

(73) Assignee: **Celgene Corporation**, Summit, NJ (US)

( * ) Notice: Subject to any disclaimer, the term of this patent is extended or adjusted under 35 U.S.C. 154(b) by 0 days.

(21) Appl. No.: **14/054,637**

(22) Filed: **Oct. 15, 2013**

(65) **Prior Publication Data**

US 2014/0102934 A1 Apr. 17, 2014

**Related U.S. Application Data**

(60) Provisional application No. 61/714,536, filed on Oct. 16, 2012, provisional application No. 61/830,259, filed on Jun. 3, 2013.

(51) **Int. Cl.**
***B65D 85/42*** (2006.01)
***B65D 77/02*** (2006.01)
(Continued)

(52) **U.S. Cl.**
CPC ..... ***B65D 85/42*** (2013.01); ***B65D 77/003*** (2013.01); ***B65D 81/133*** (2013.01); ***B65B 5/024*** (2013.01); ***B65D 77/02*** (2013.01); ***B65D 77/042*** (2013.01);
(Continued)

(58) **Field of Classification Search**
CPC .... B65D 77/003; B65D 77/02; B65D 77/042; B65D 77/0426; B65D 81/133; B65D 85/42; B65D 2201/00
USPC ..... 206/446, 590–593, 736, 745, 756–765, 206/769–774, 807; 229/125.01
See application file for complete search history.

(56) **References Cited**

U.S. PATENT DOCUMENTS

1,951,831 A 3/1934 Lewis
2,274,253 A 2/1942 Howell
(Continued)

FOREIGN PATENT DOCUMENTS

DE 20321788 U1 2/2010
FR 1407142 A 7/1965
FR 2864825 A1 * 7/2005

OTHER PUBLICATIONS

MWV: Dosepak® Unit-Dose Medication Packaging [online]. MeadWestvaco Corporation. [retrieved on Oct. 2, 2012]. Retrieved from the internet: <URL:www.meadwestvaco.com/HealthcarePackagingSolutions/AdherencePackaging/MWV021898>.
(Continued)

*Primary Examiner* — Bryon Gehman
(74) *Attorney, Agent, or Firm* — Jones Day

(57) **ABSTRACT**

A package for receiving a vial may include an inner portion folded into a first shape configured to receive the vial; an outer portion folded into a second shape configured to removably receive the first shape of the inner portion; and an identifying mark or label disposed on the inner portion and viewable when the inner portion is disposed within the outer portion. The inner portion may include top, bottom, and first and second side portions that define a first aperture configured to receive the vial, and a top flap securable to the top or first or second side portions so as to retain the vial within the first aperture. A second aperture defined in the top flap may permit access to contents of the vial without removing the vial from the inner portion, e.g., may have a diameter selected to permit the vial top to protrude therethrough.

**33 Claims, 35 Drawing Sheets**

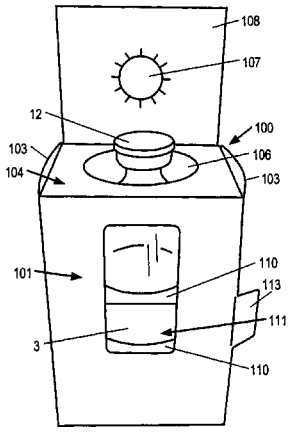


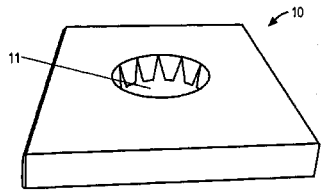

(51) **Int. Cl.**

| | |
|---|---|
| ***B65D 81/133*** | (2006.01) |
| ***B65D 77/00*** | (2006.01) |
| ***B65B 5/02*** | (2006.01) |
| ***B65D 77/04*** | (2006.01) |

(52) **U.S. Cl.**
CPC ..... ***B65D 77/0426*** (2013.01); *B65D 2201/00* (2013.01)

(56) **References Cited**

U.S. PATENT DOCUMENTS

| | | | | | |
|---|---|---|---|---|---|
| 3,204,759 | A | * | 9/1965 | Palmer | 206/777 |
| 3,240,417 | A | * | 3/1966 | Andreini | 206/592 |
| 3,349,986 | A | * | 10/1967 | Chapman et al. | 206/591 |
| 3,437,194 | A | | 4/1969 | Ames et al. | |
| 3,616,897 | A | * | 11/1971 | Vrana | 206/568 |
| 3,819,036 | A | | 6/1974 | Weldon | |
| 4,109,786 | A | * | 8/1978 | Roccaforte et al. | 206/783 |
| 5,673,796 | A | | 10/1997 | Tulloch | |
| 5,765,693 | A | * | 6/1998 | Gnadt et al. | 206/763 |
| 5,775,505 | A | | 7/1998 | Vasquez et al. | |
| 5,860,526 | A | * | 1/1999 | Burke, Jr. | 206/446 |
| 6,024,224 | A | * | 2/2000 | Gnadt et al. | 206/763 |
| 6,789,678 | B2 | * | 9/2004 | Auclair | 206/590 |
| 7,718,132 | B2 | | 5/2010 | Thomson et al. | |
| 2010/0264058 | A1 | * | 10/2010 | Krause | 206/745 |

OTHER PUBLICATIONS

MWV: Injectapak® Vial/Syringe Packages [online]. MeadWestvaco Corporation, 2012 [retrieved on Oct. 15, 2013]. Retrieved from the internet<URL:www.meadwestvaco.com/HealthcarePackagingSolutions/InjectableDelivery/MWV021911>.

* cited by examiner

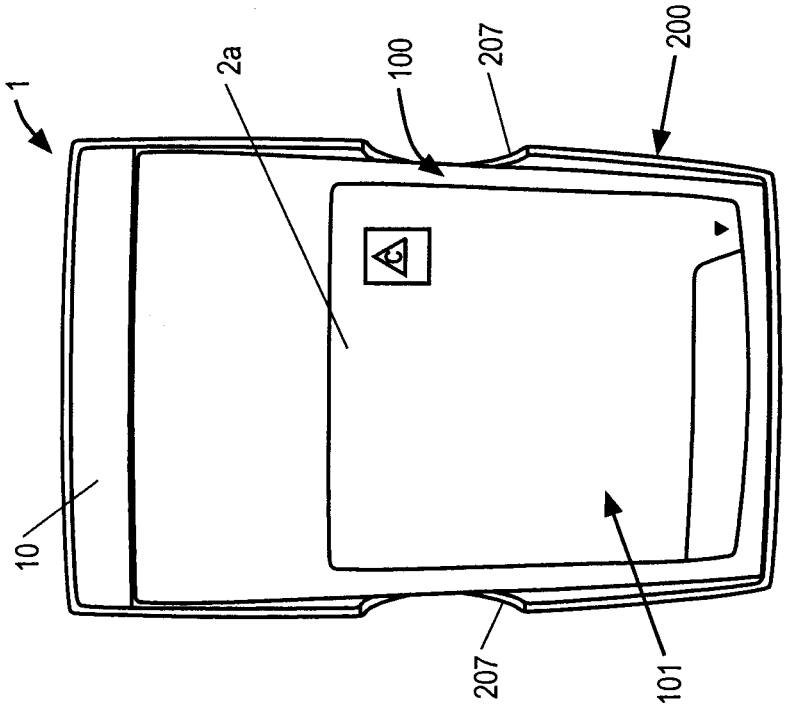
1
10
2a
100
207
200
207
101

FIG. 1B

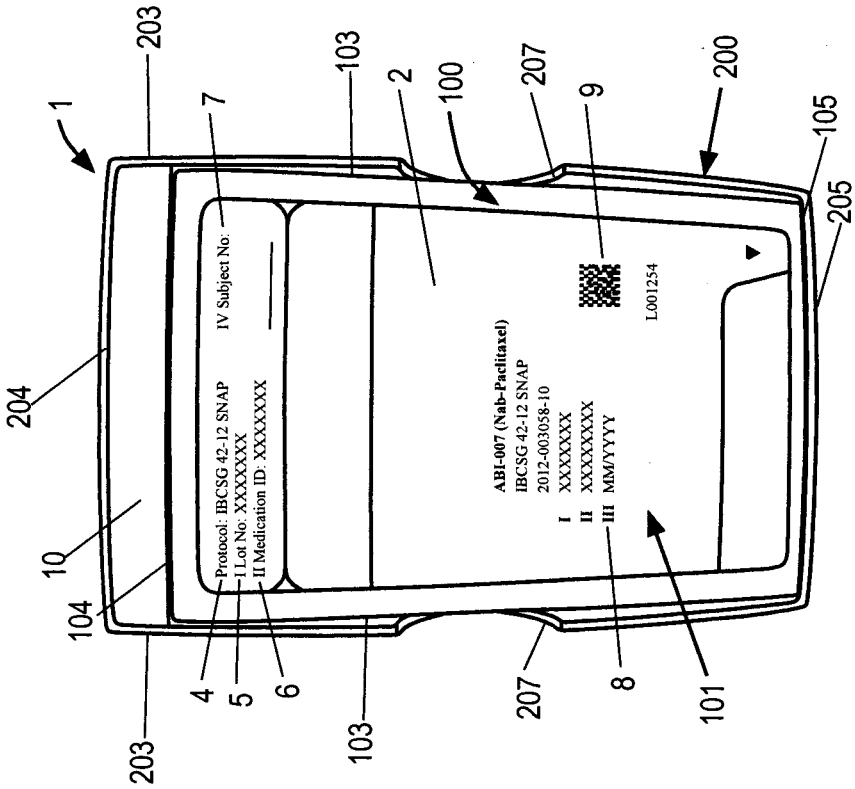
1
203
204
10
104
203
7
Protocol: IBCSG 42-12 SNAP
I Lot No: XXXXXXXX
II Medication ID: XXXXXXXX
IV Subject No:
4
5
6
103
2
100
207
9
ABI-007 (Nab-Paclitaxel)
IBCSG 42-12 SNAP
2012-003058-10
I XXXXXXXX
II XXXXXXXX
III MM/YYYY
L001254
8
207
101
200
105
205

FIG. 1A

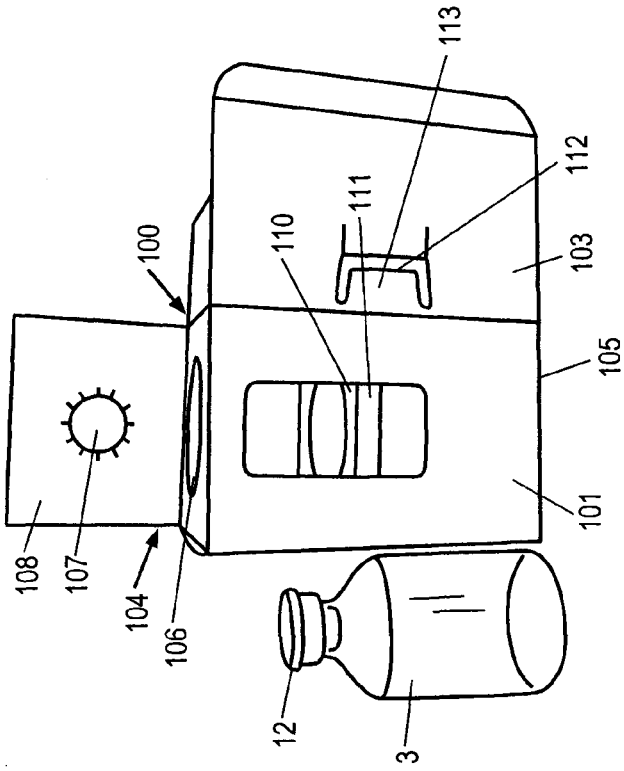
100
108
107
104
106
110
111
113
112
103
105
101
12
3

FIG. 3

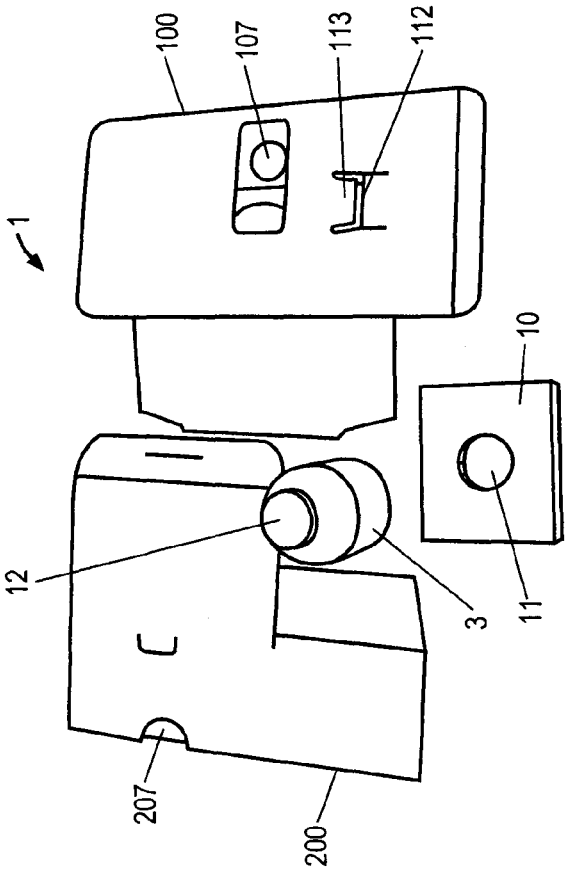
1
100
107
113
112
10
12
3
11
207
200

FIG. 2

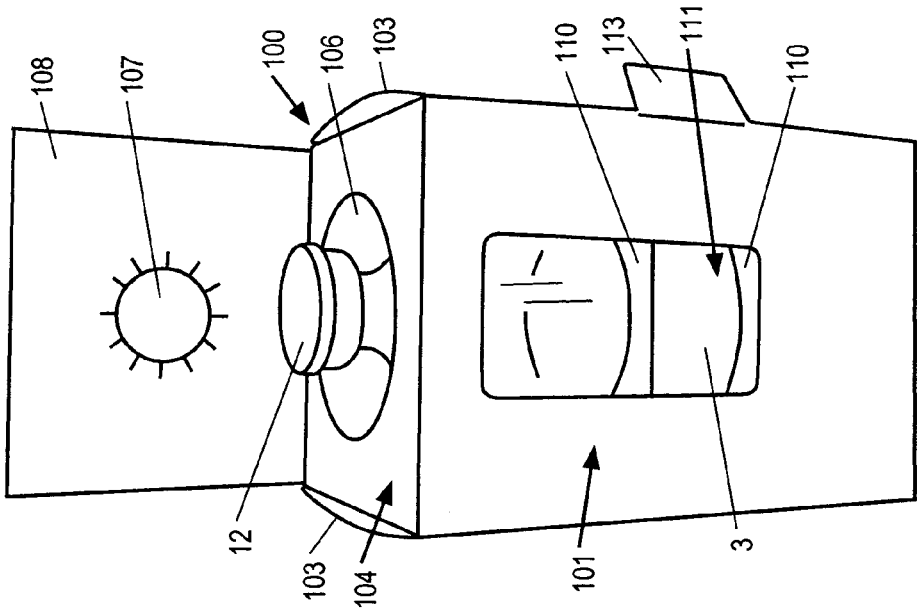
108
107
100
106
103
110
113
111
110
12
103
104
101
3

FIG. 5

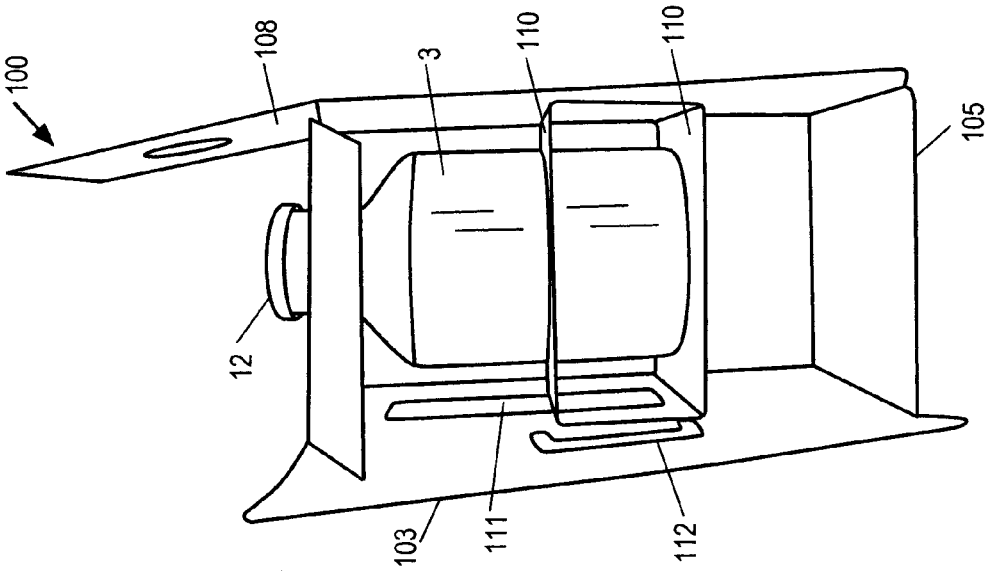
100
108
3
110
110
105
12
103
111
112

FIG. 4

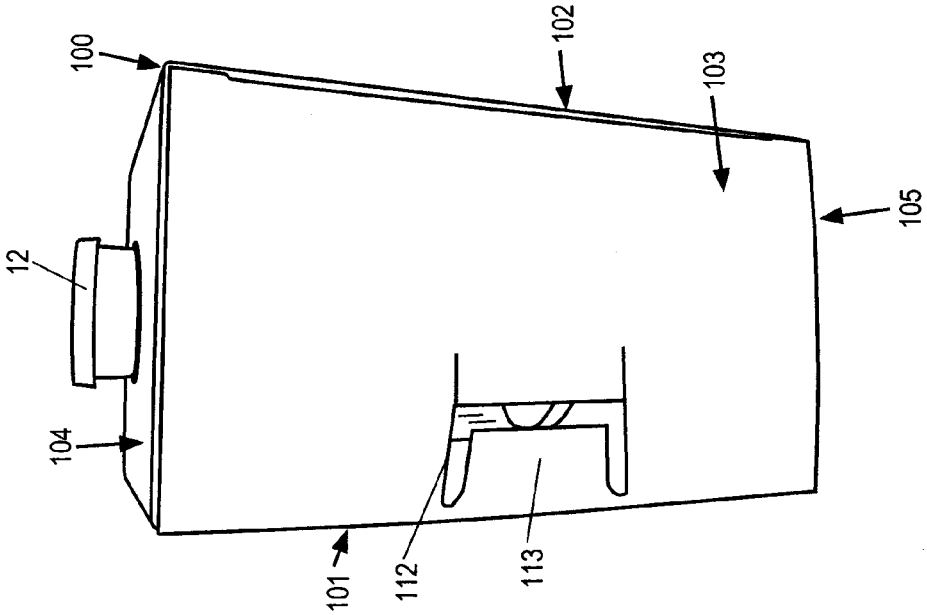
100
102
103
105
12
104
101
112
113

FIG. 7

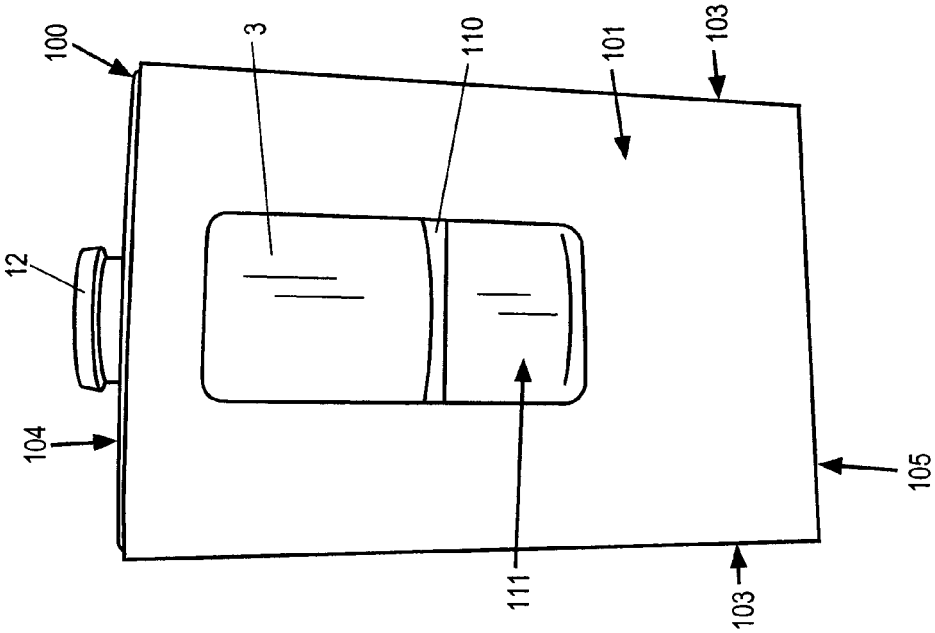
100
3
110
101
103
12
104
105
111
103

FIG. 6

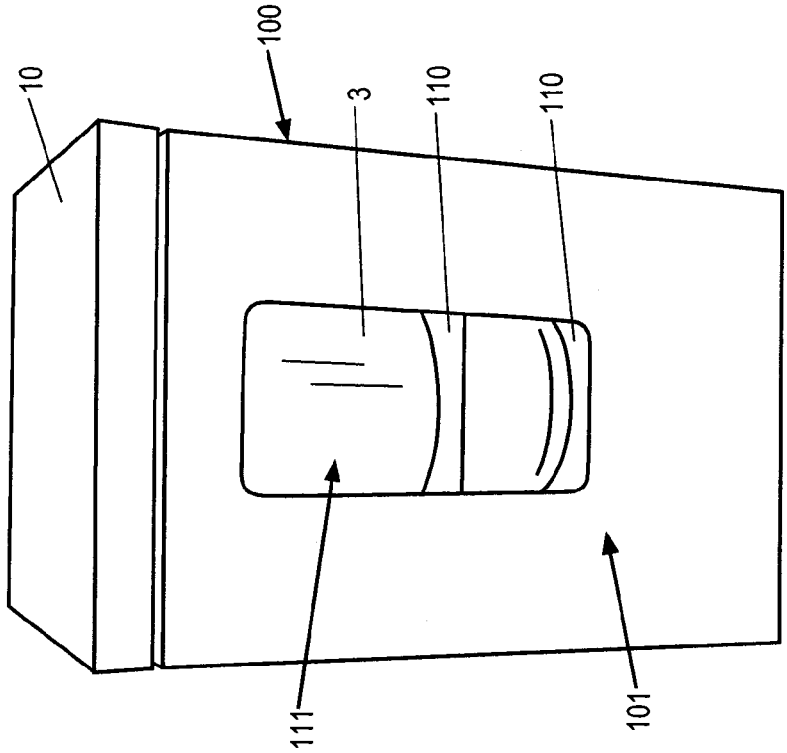


FIG. 9

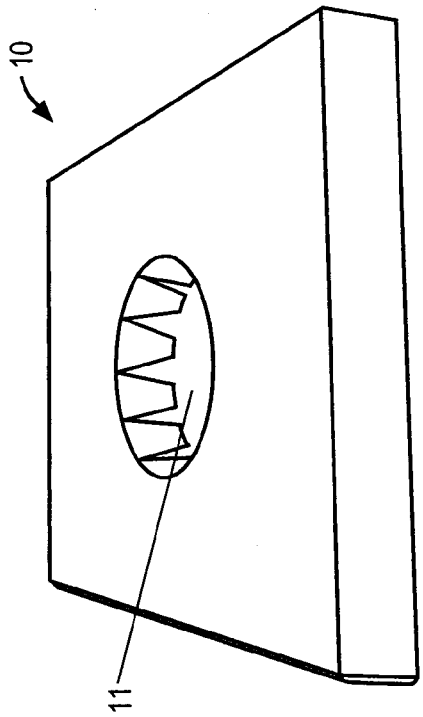


FIG. 8

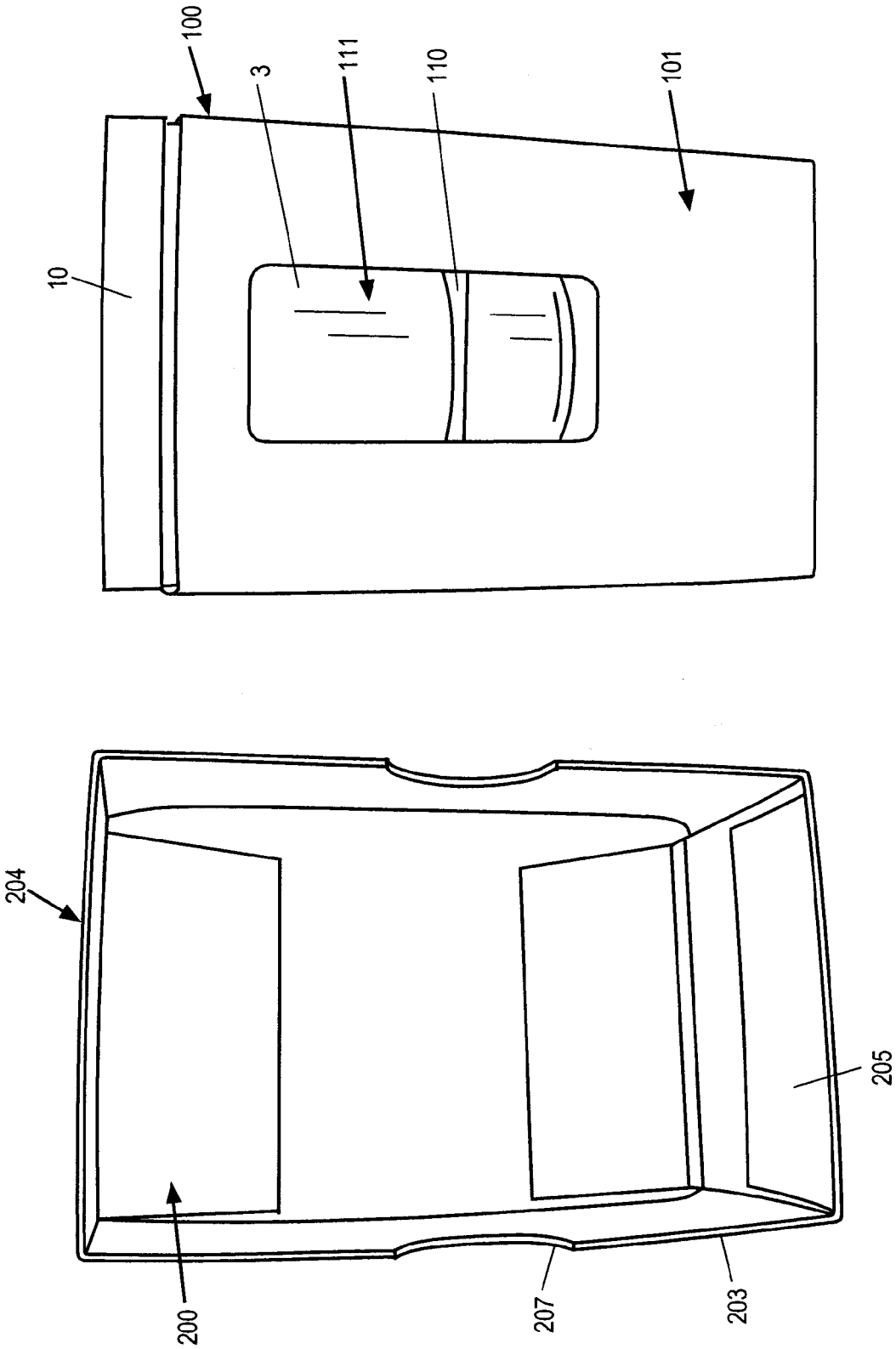


FIG. 10

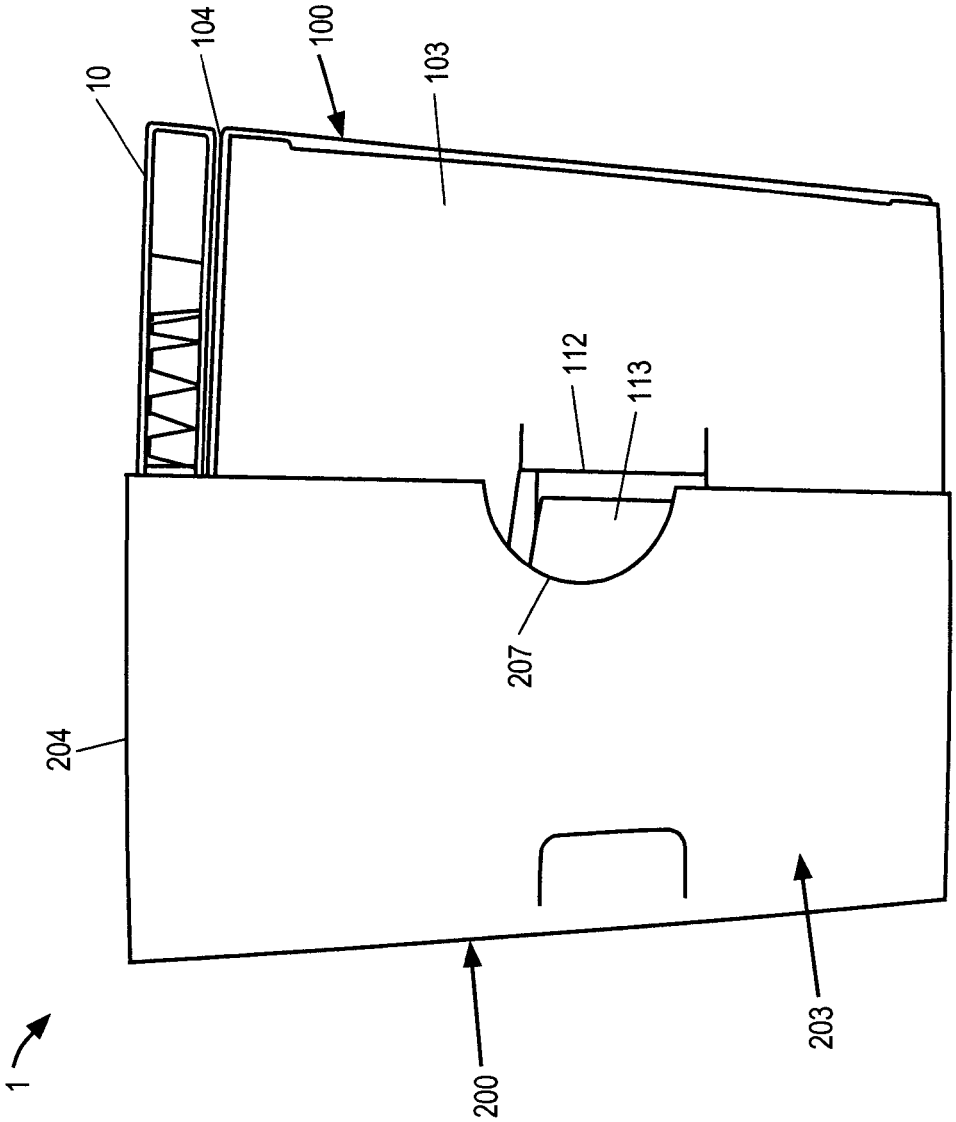


FIG. 11

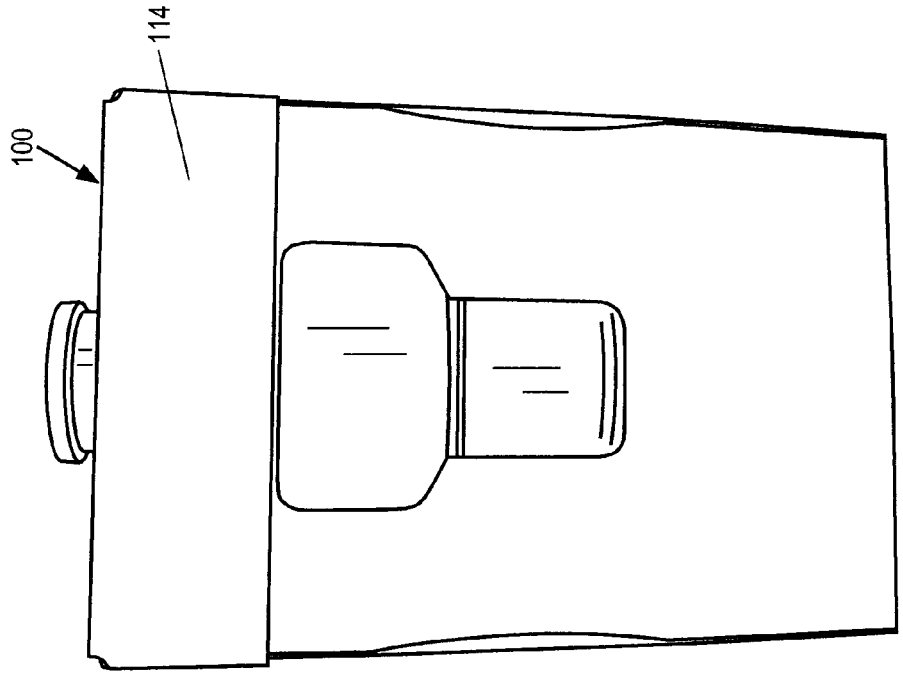


FIG. 13

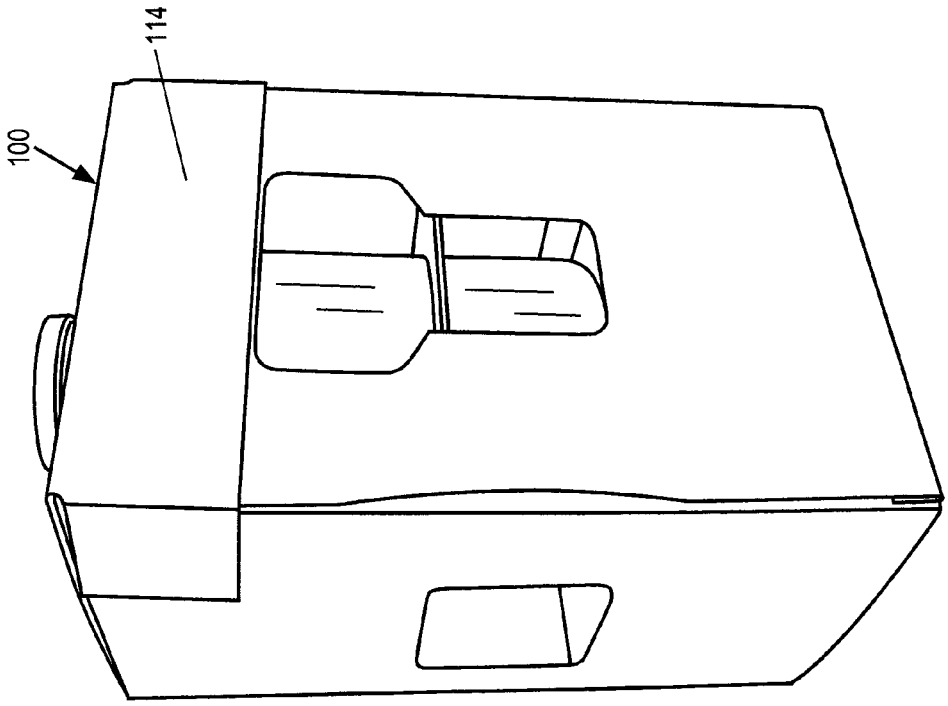


FIG. 12

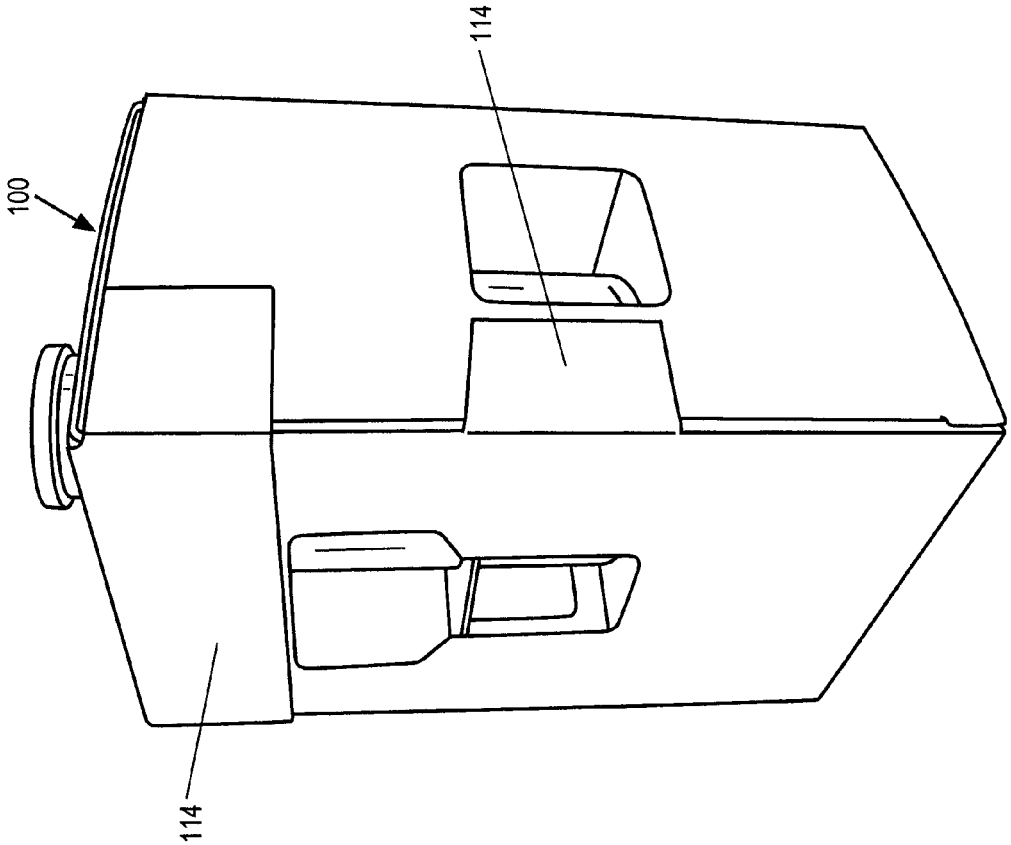


FIG. 14

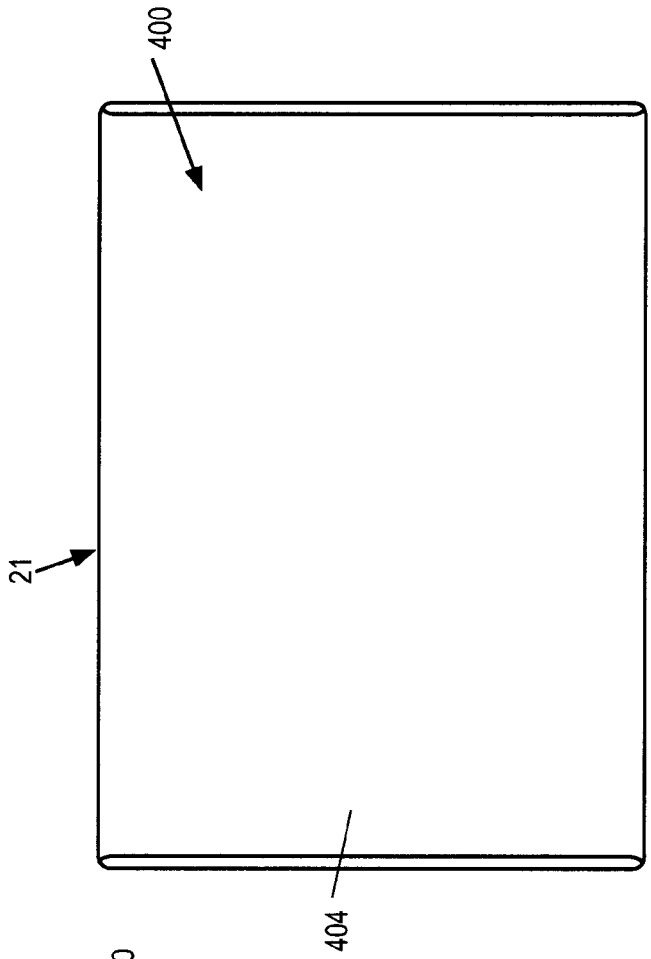


FIG. 16

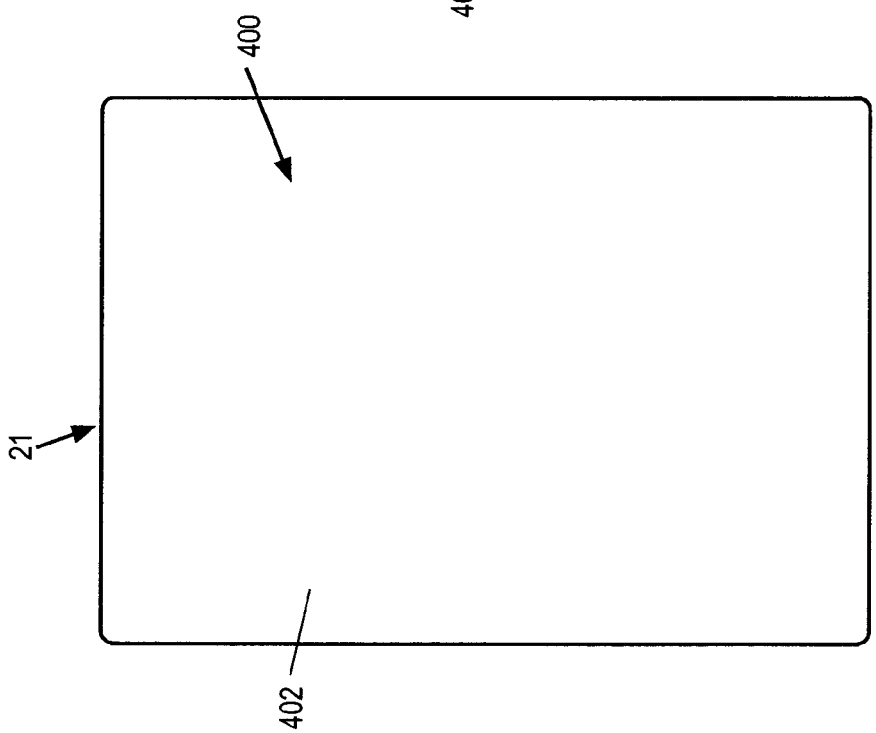


FIG. 15

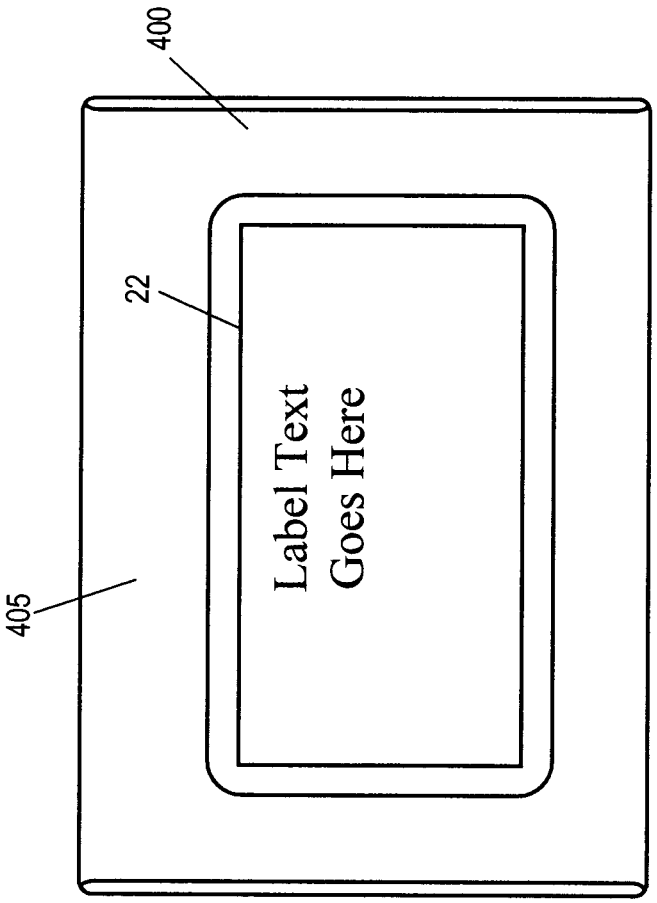


FIG. 17

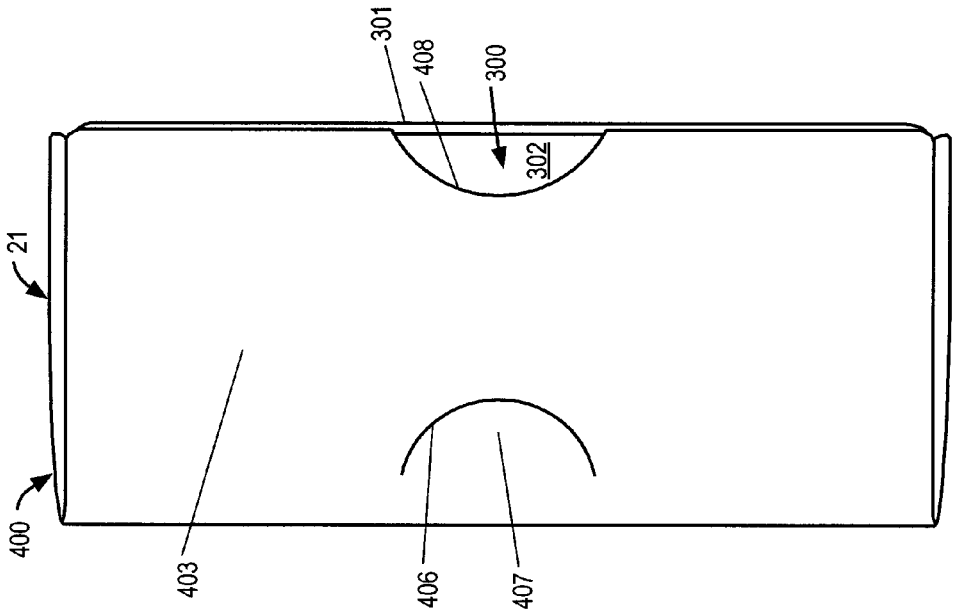
21
400
403
406
407
301
408
300
302

FIG. 19

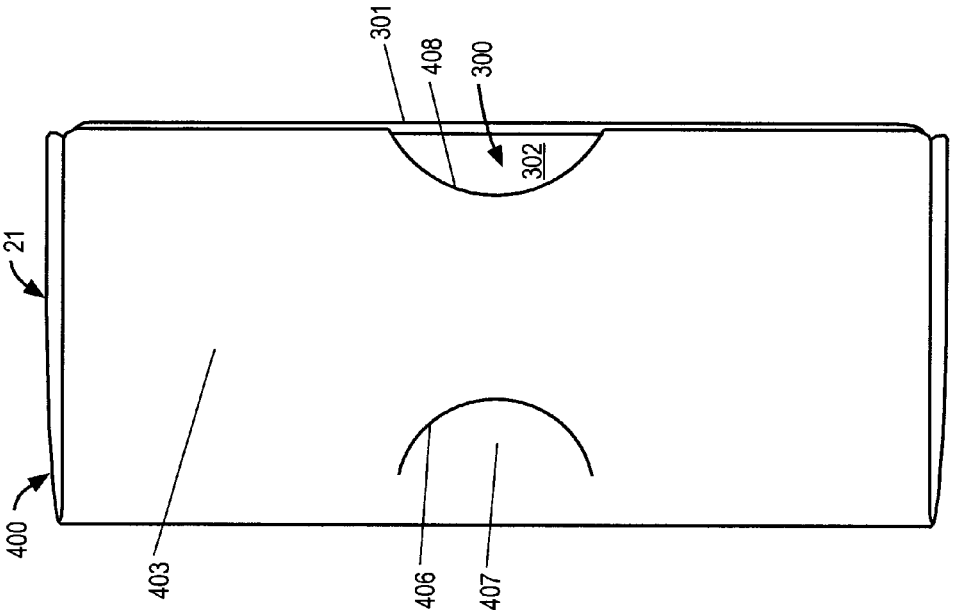
21
400
403
406
407
301
408
300
302

FIG. 18

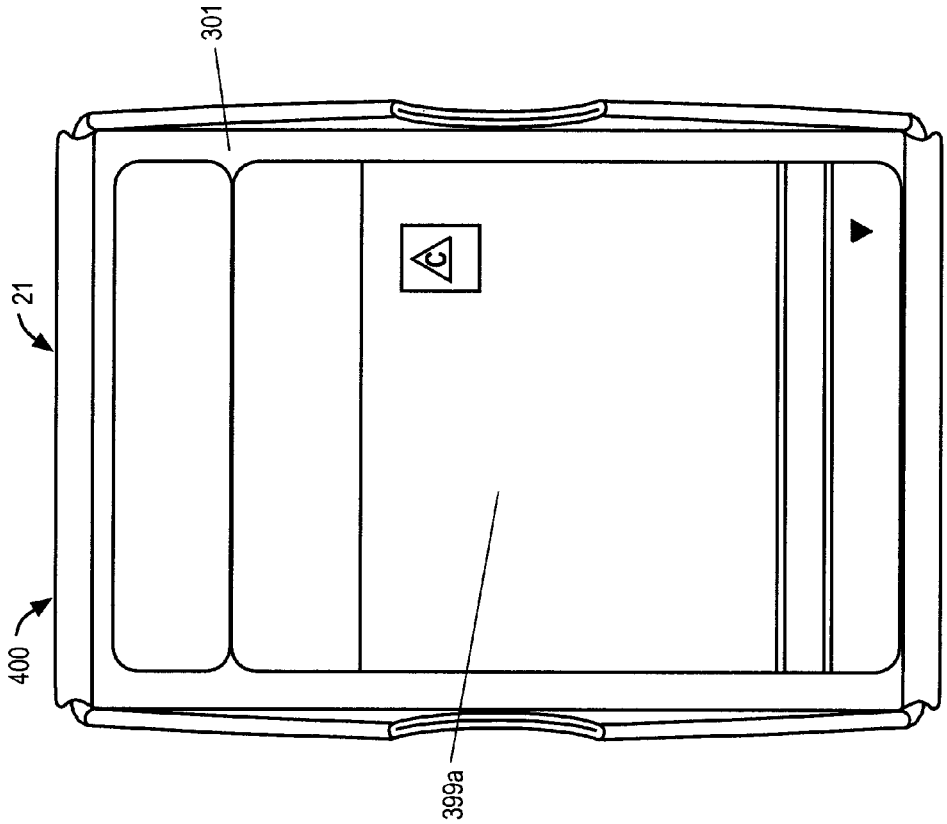


FIG. 20B

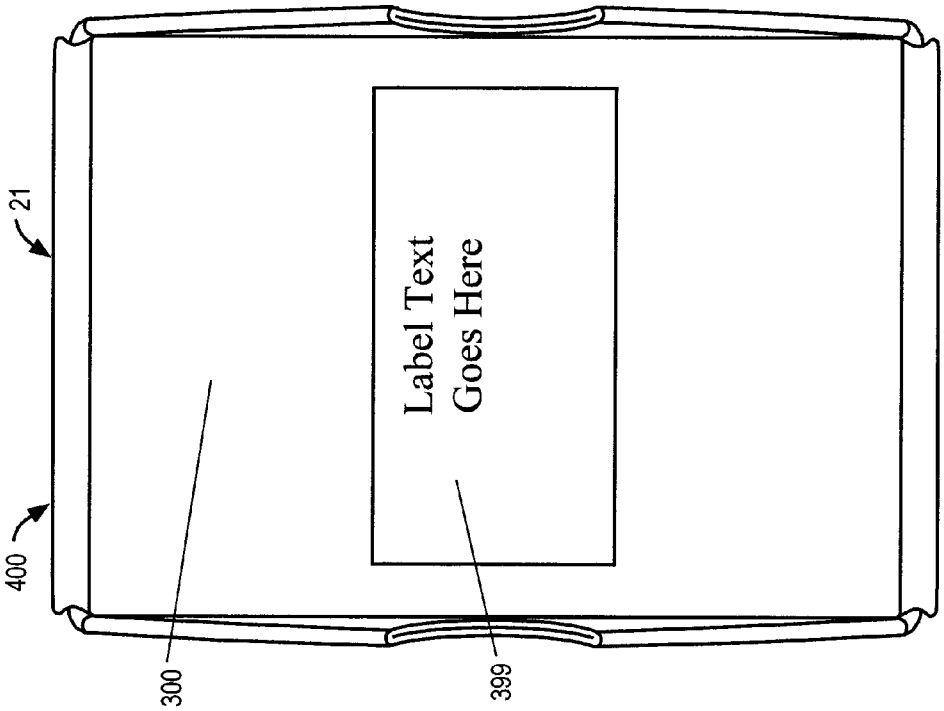


FIG. 20A

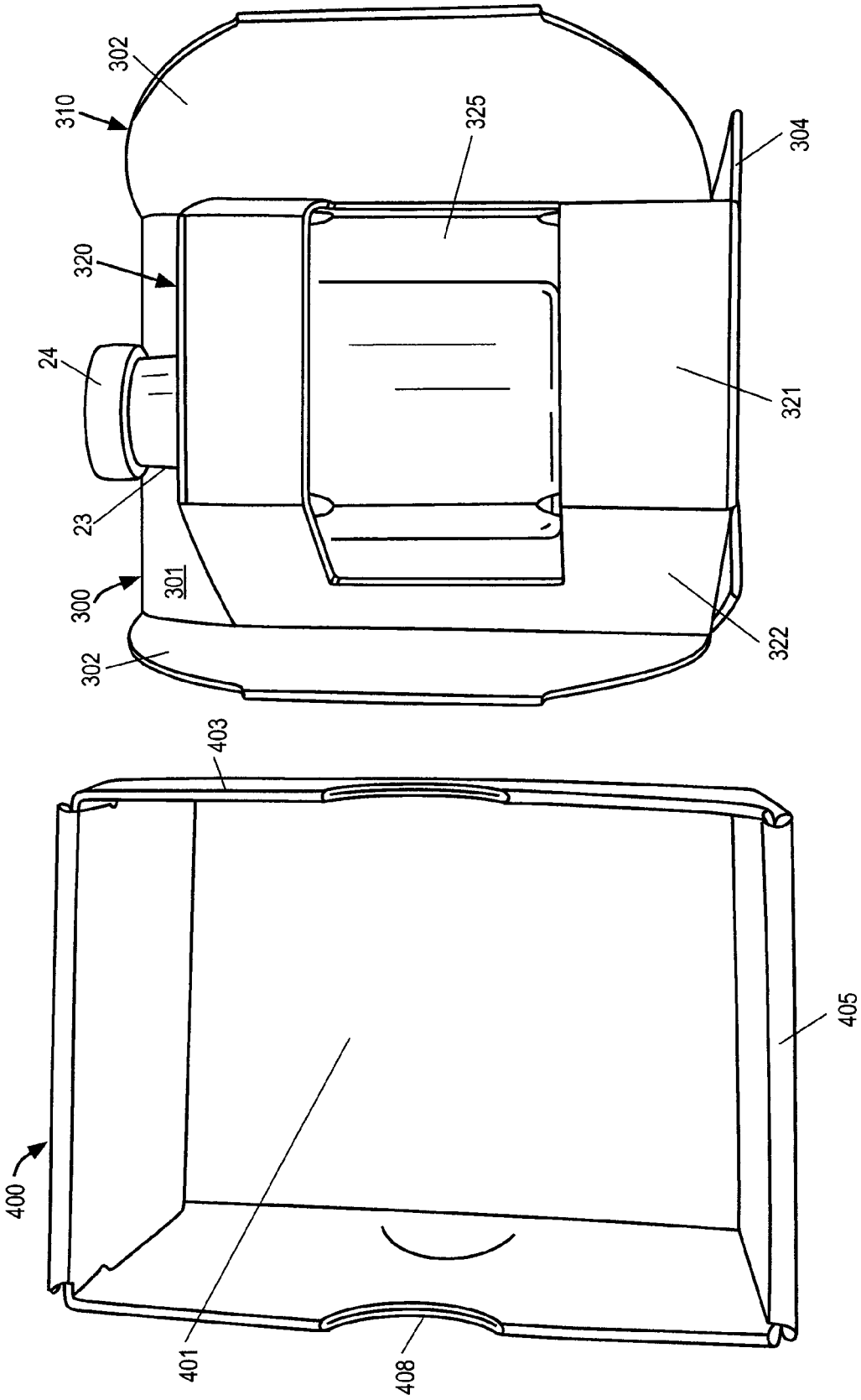


FIG. 21

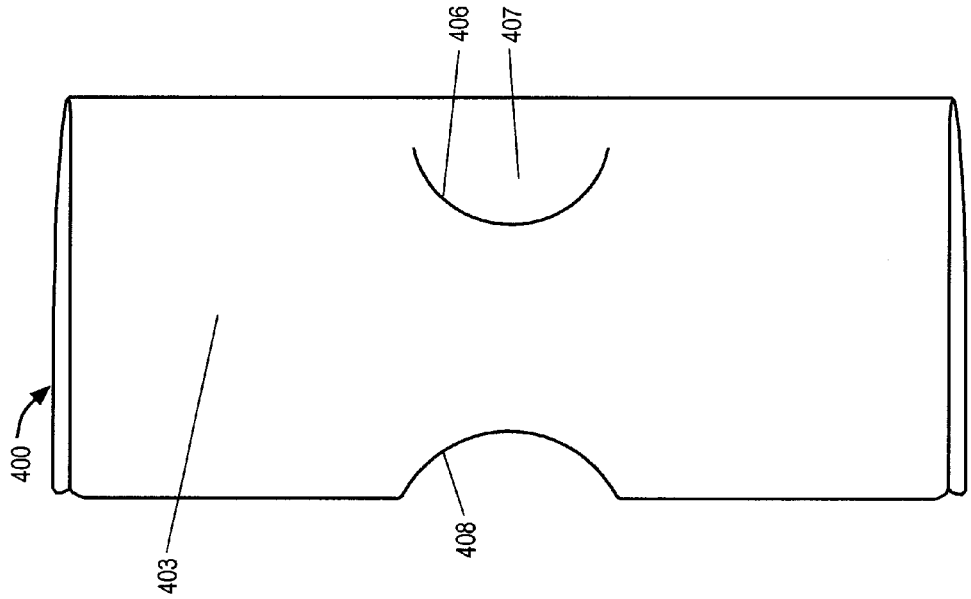


FIG. 23

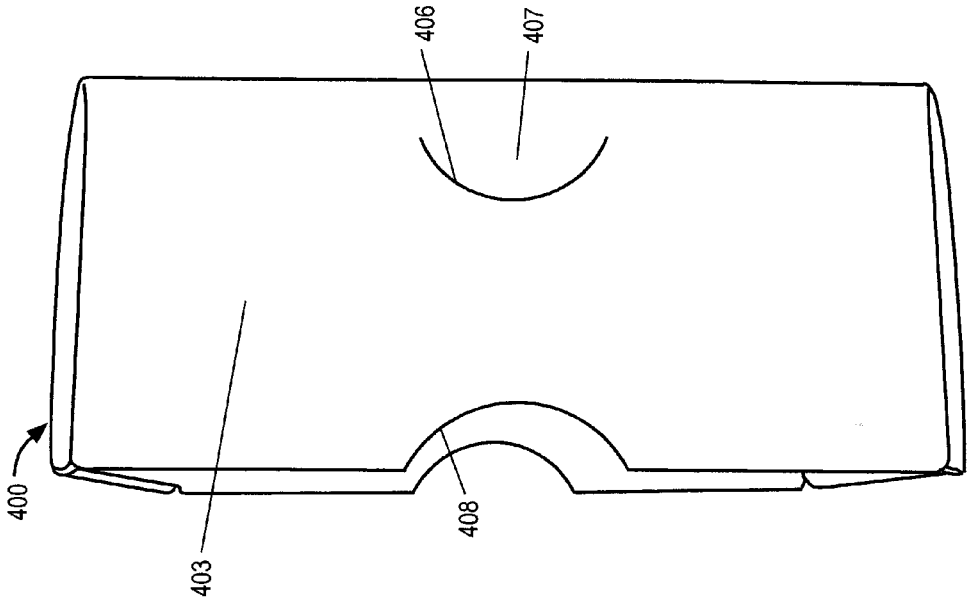


FIG. 22

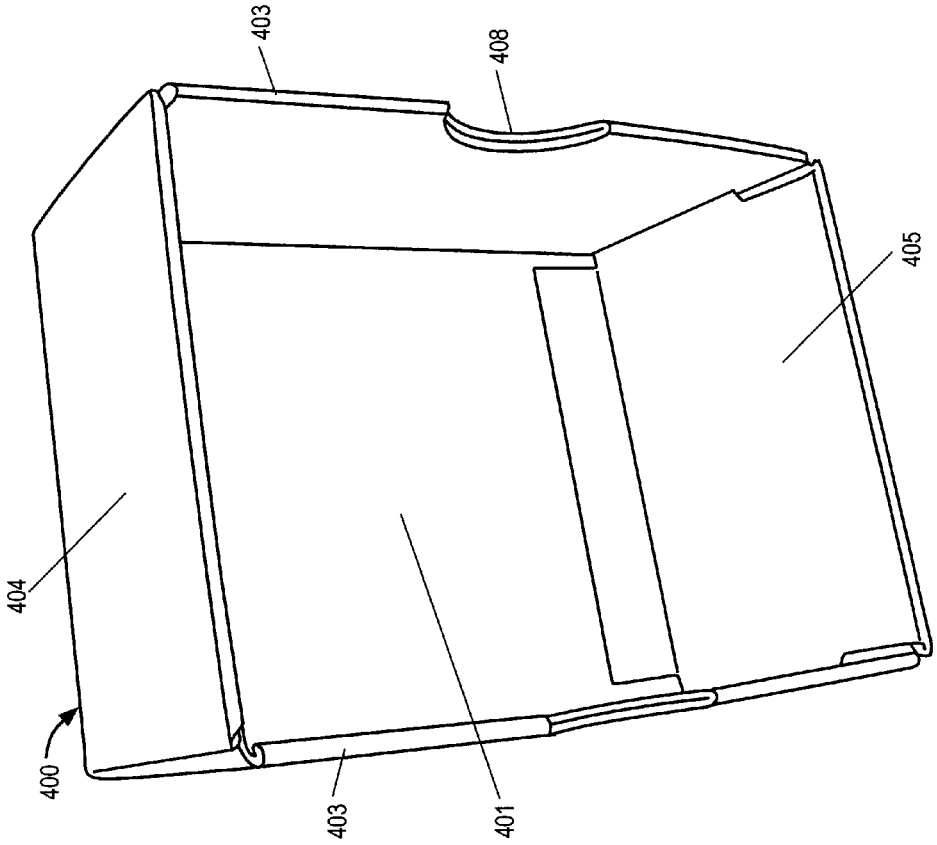


FIG. 24

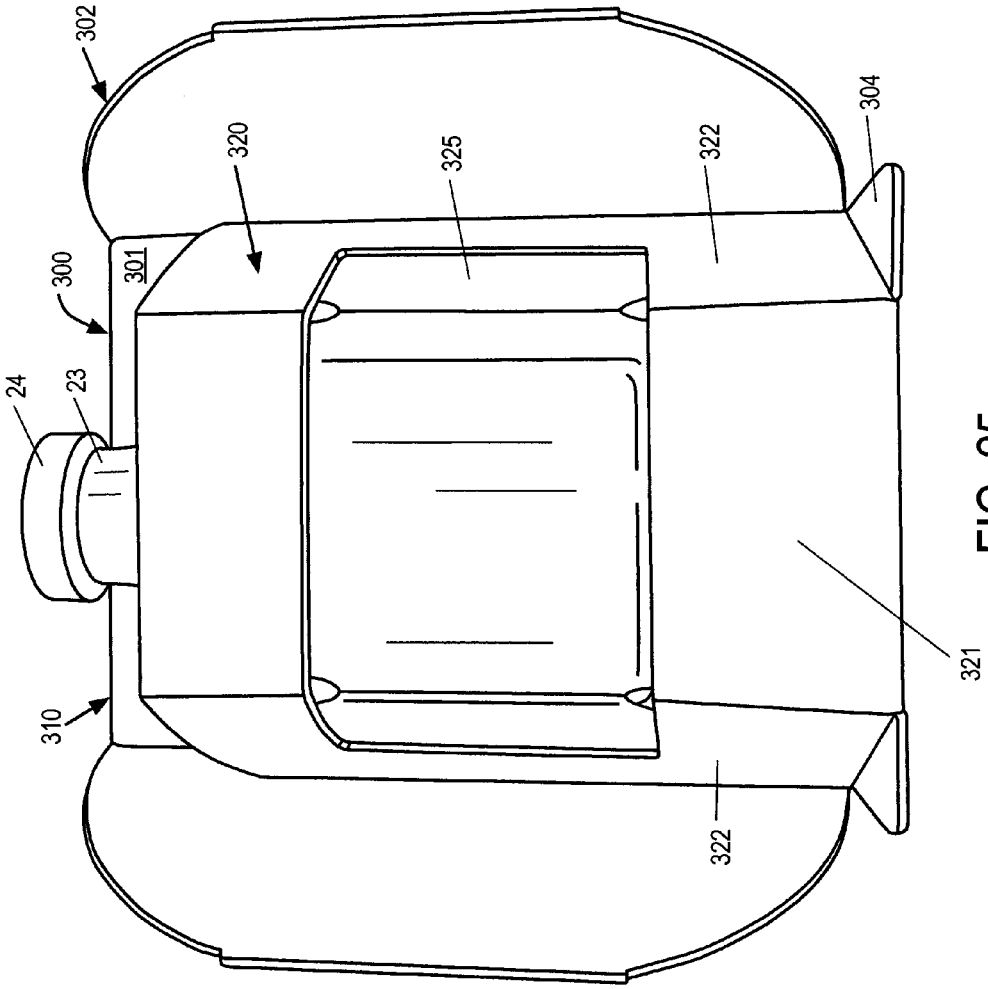


FIG. 25

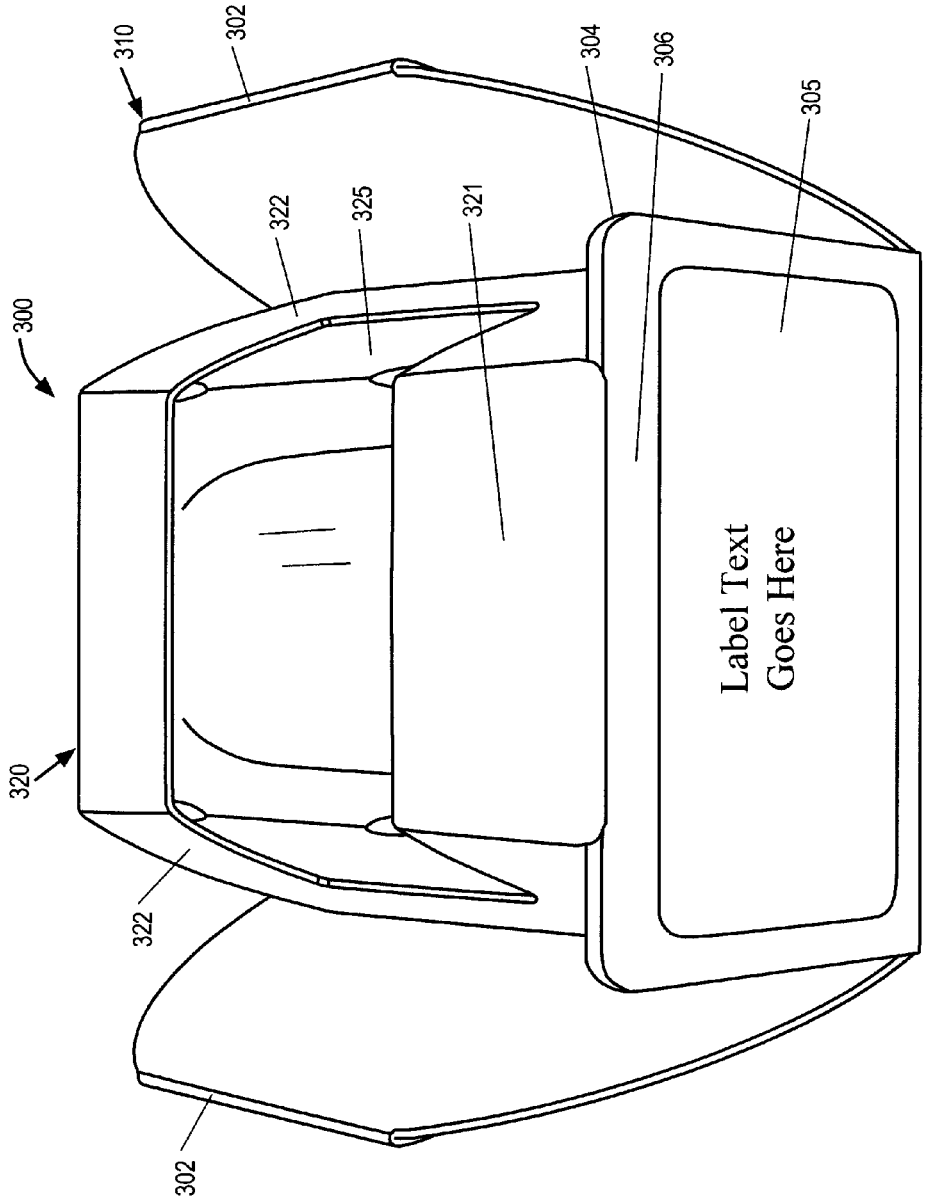
300
310
302
322
325
321
304
306
305
320
322
302
Label Text
Goes Here

FIG. 26

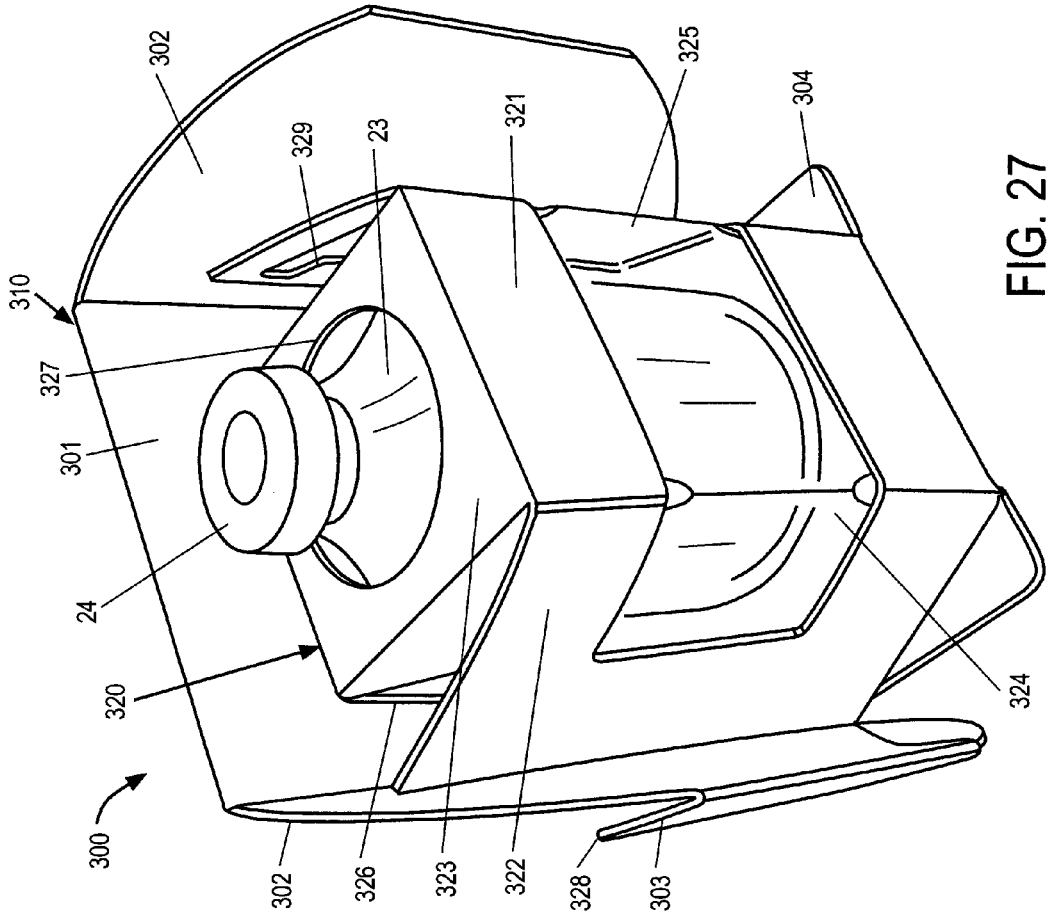
302
325
304
329
23
321
310
327
301
24
320
300
302
326
323
322
328
303
324

FIG. 27

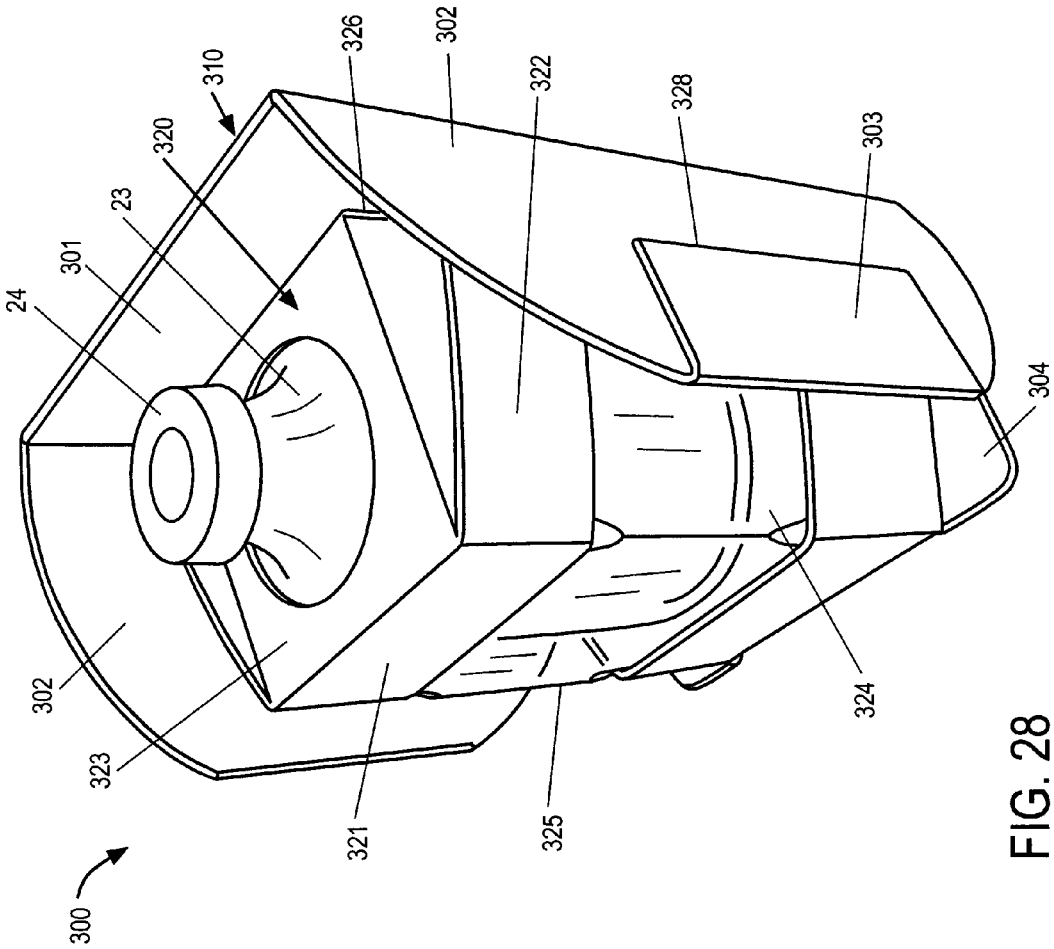


FIG. 28

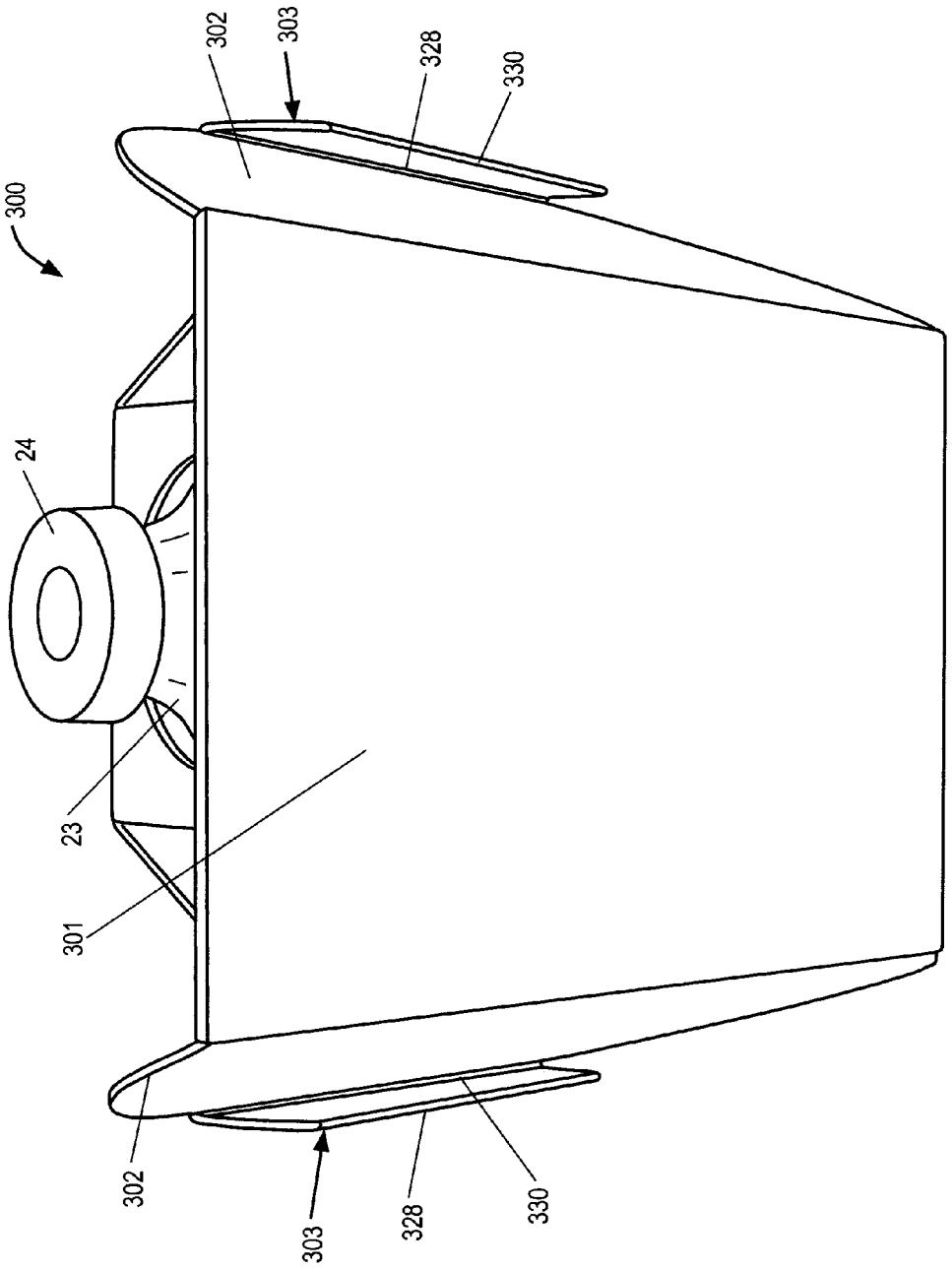


FIG. 29

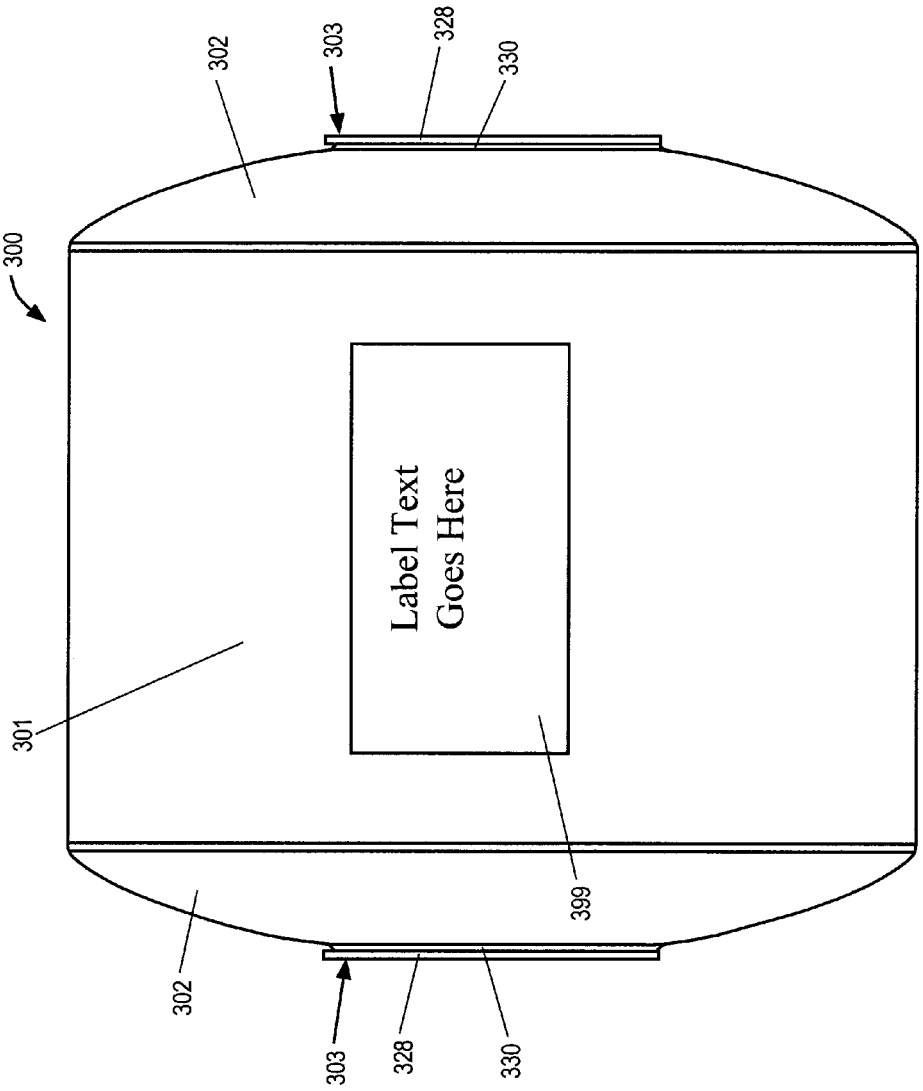
300
302
303
328
330
301
Label Text
Goes Here
399
302
303
328
330

FIG. 30

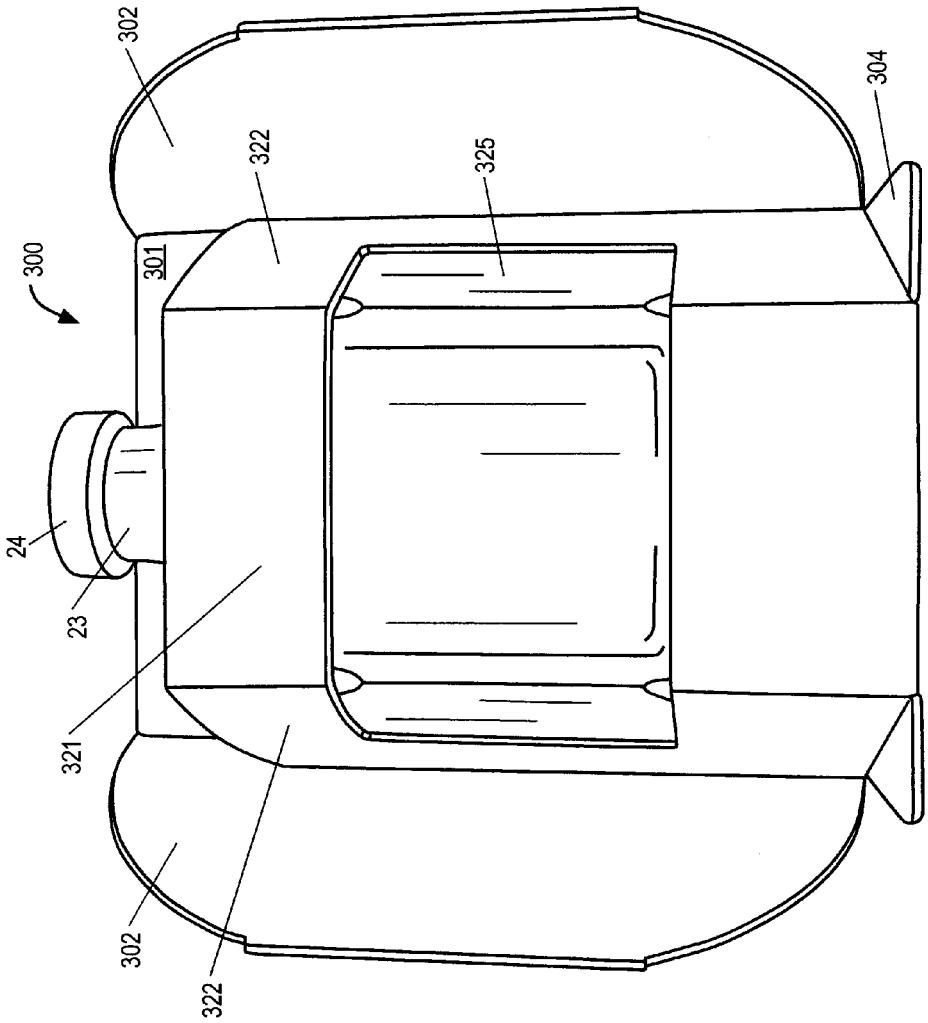


FIG. 31

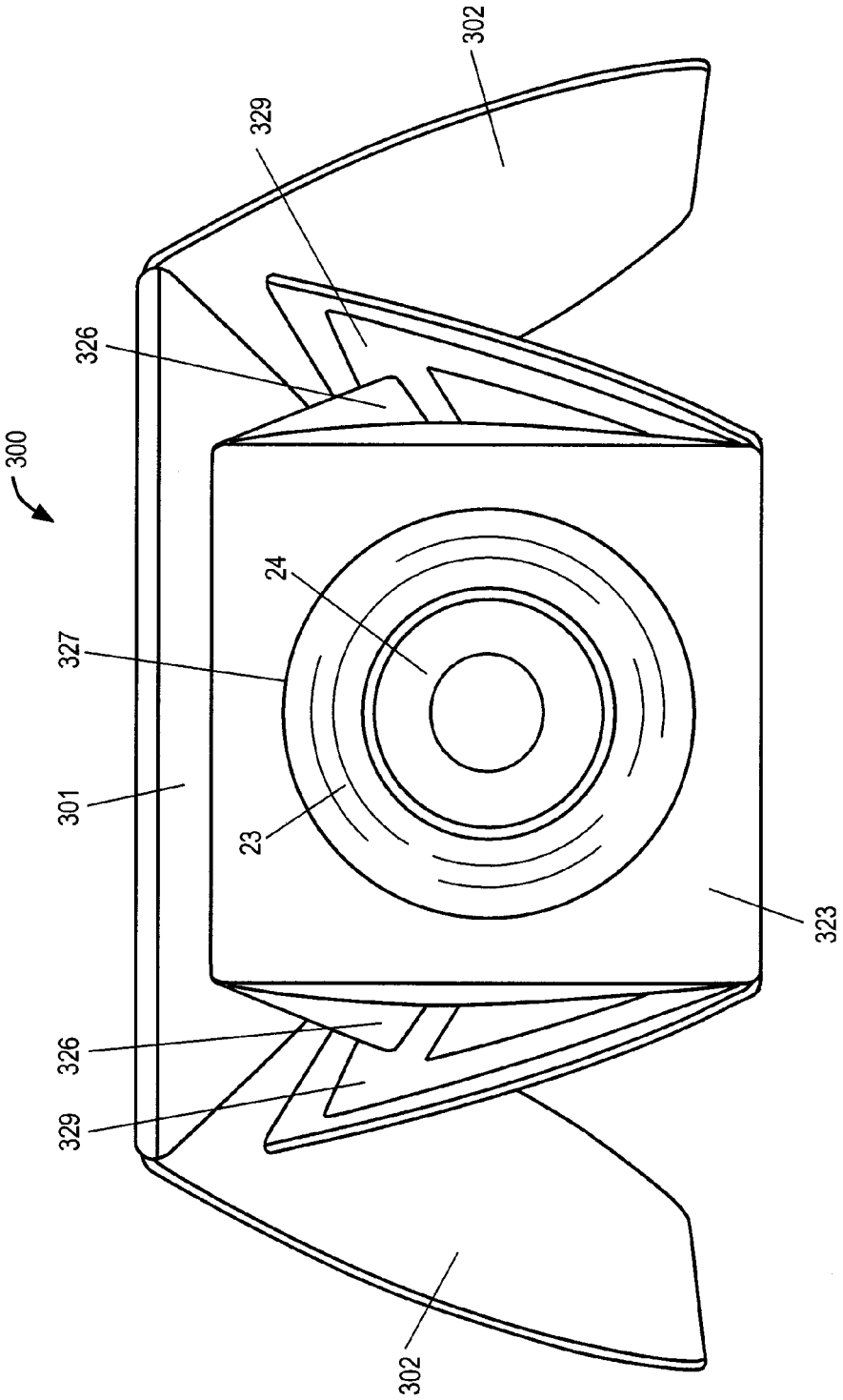


FIG. 32

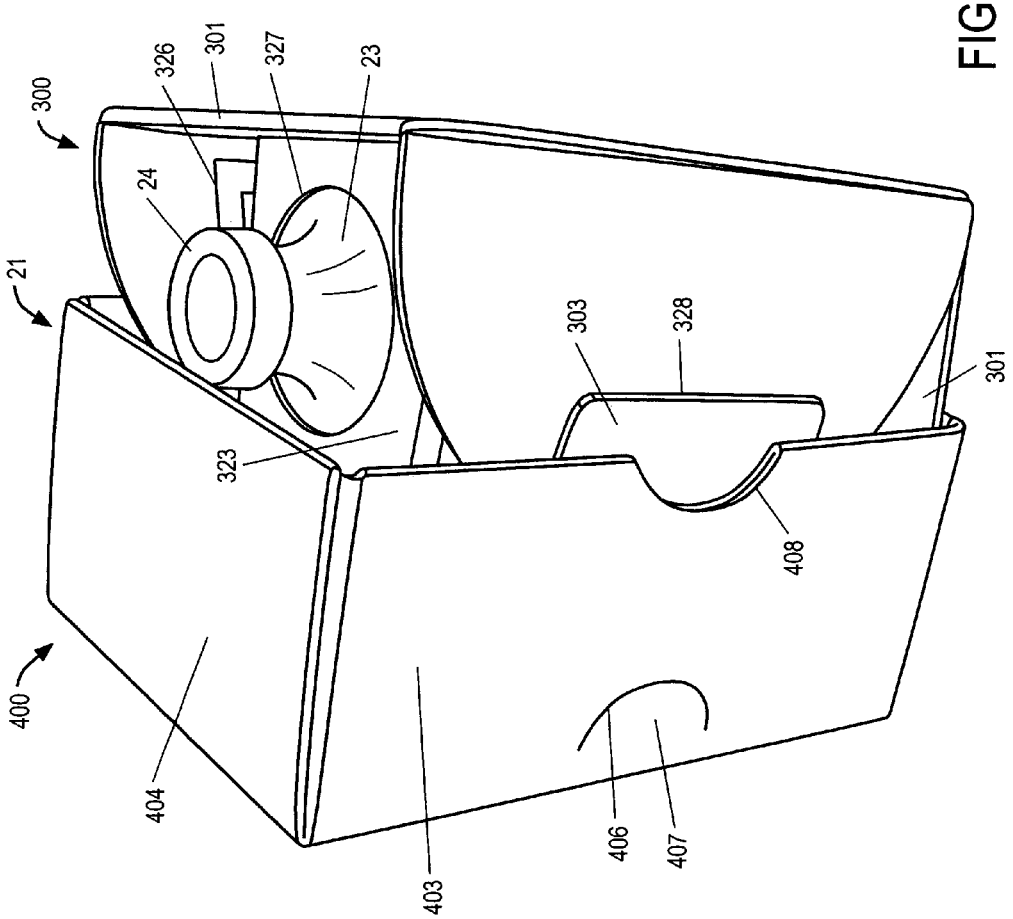


FIG. 33

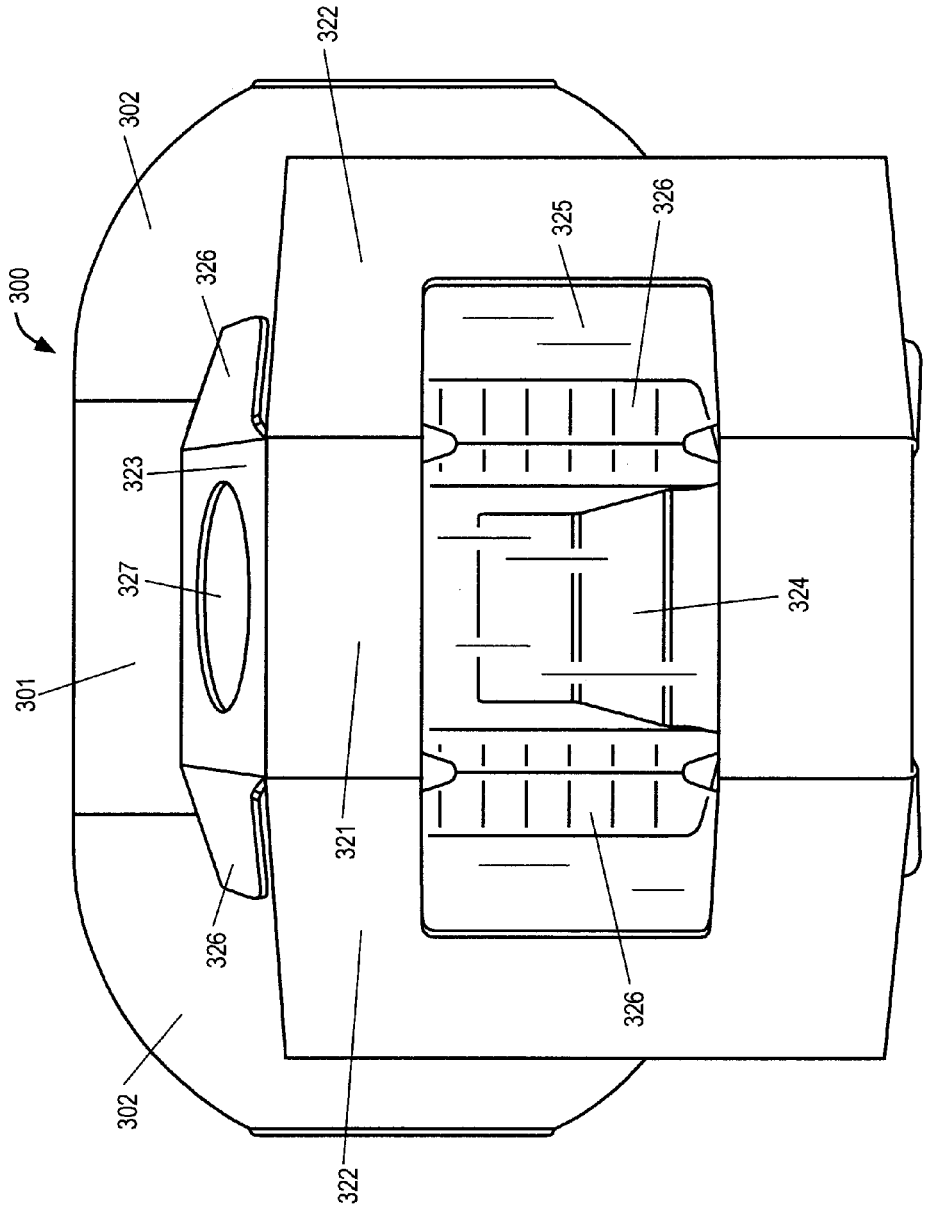


FIG. 34

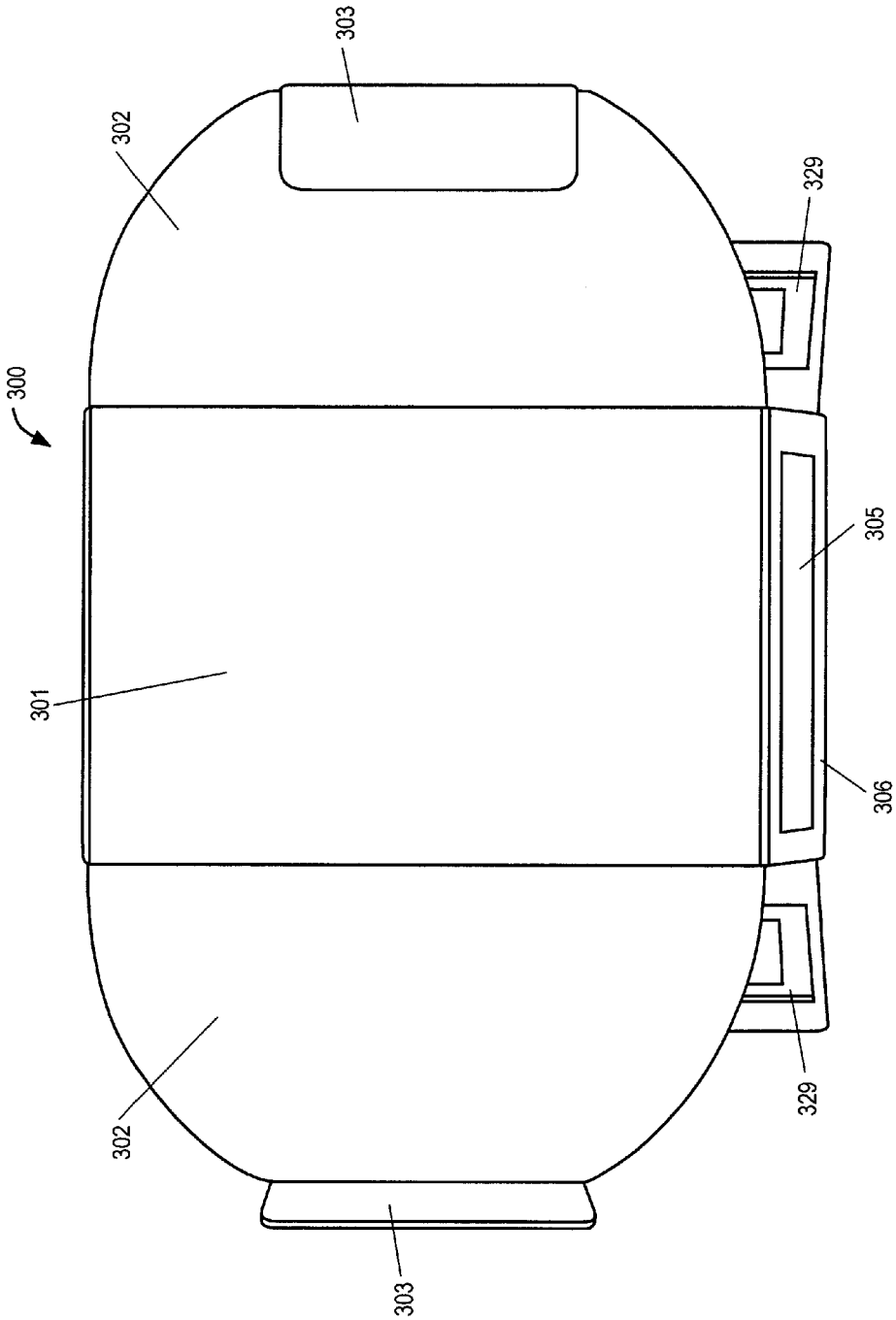


FIG. 35

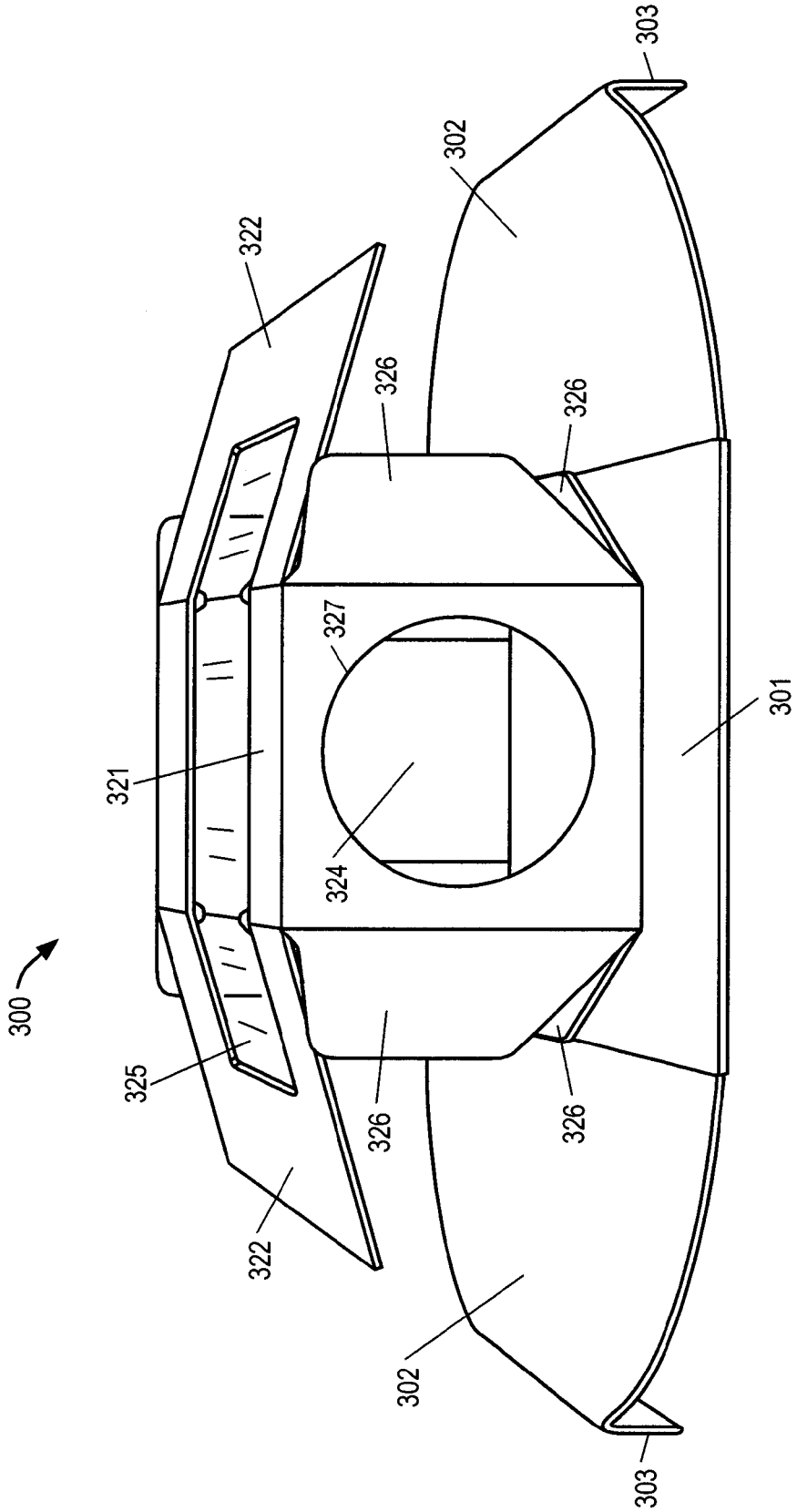


FIG. 36

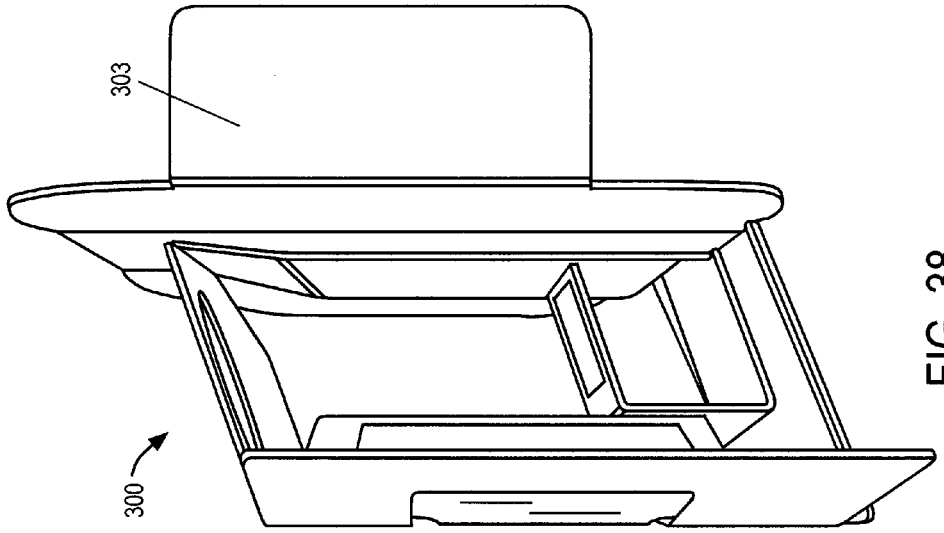


FIG. 38

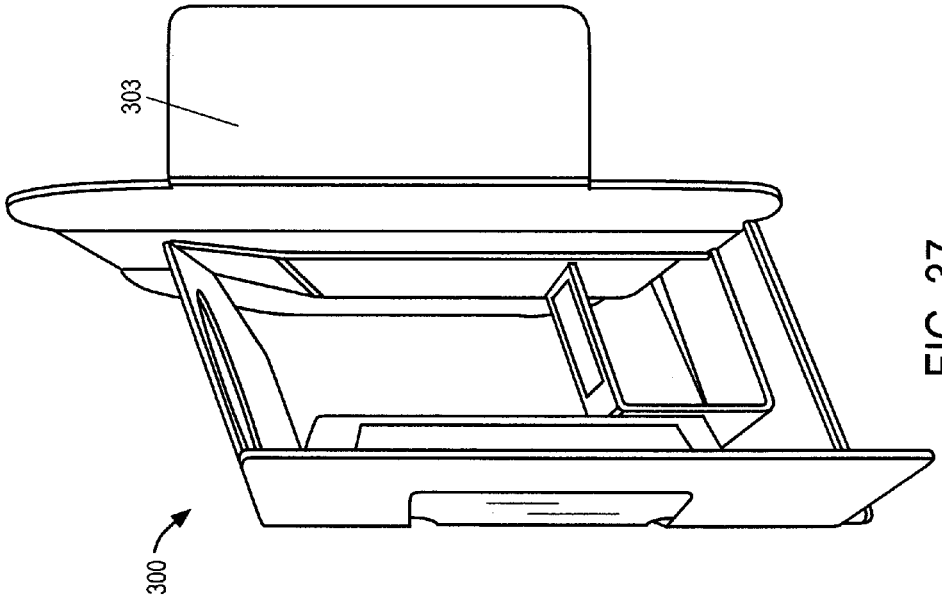


FIG. 37

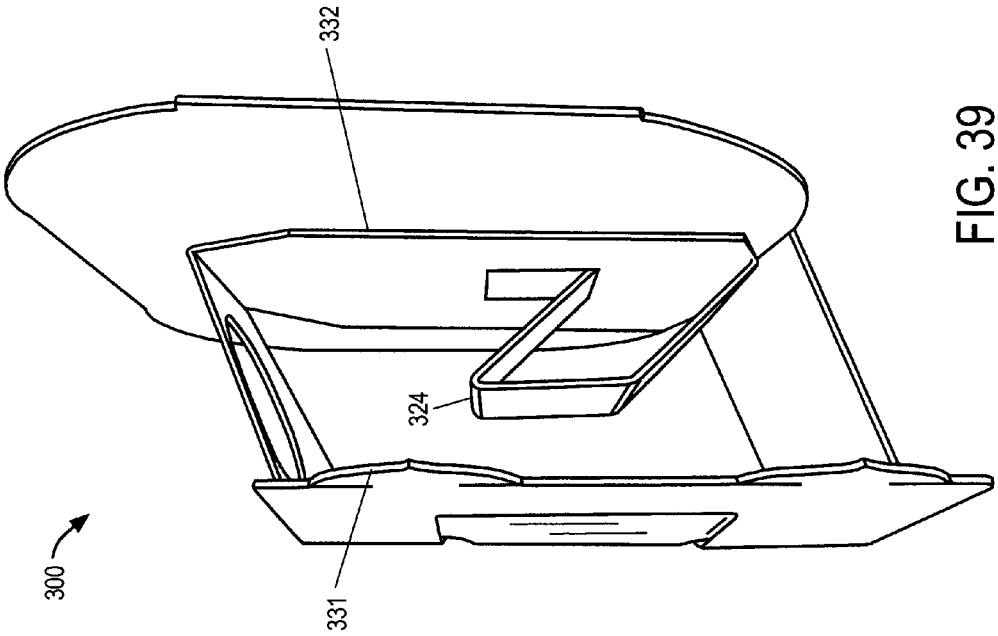


FIG. 39

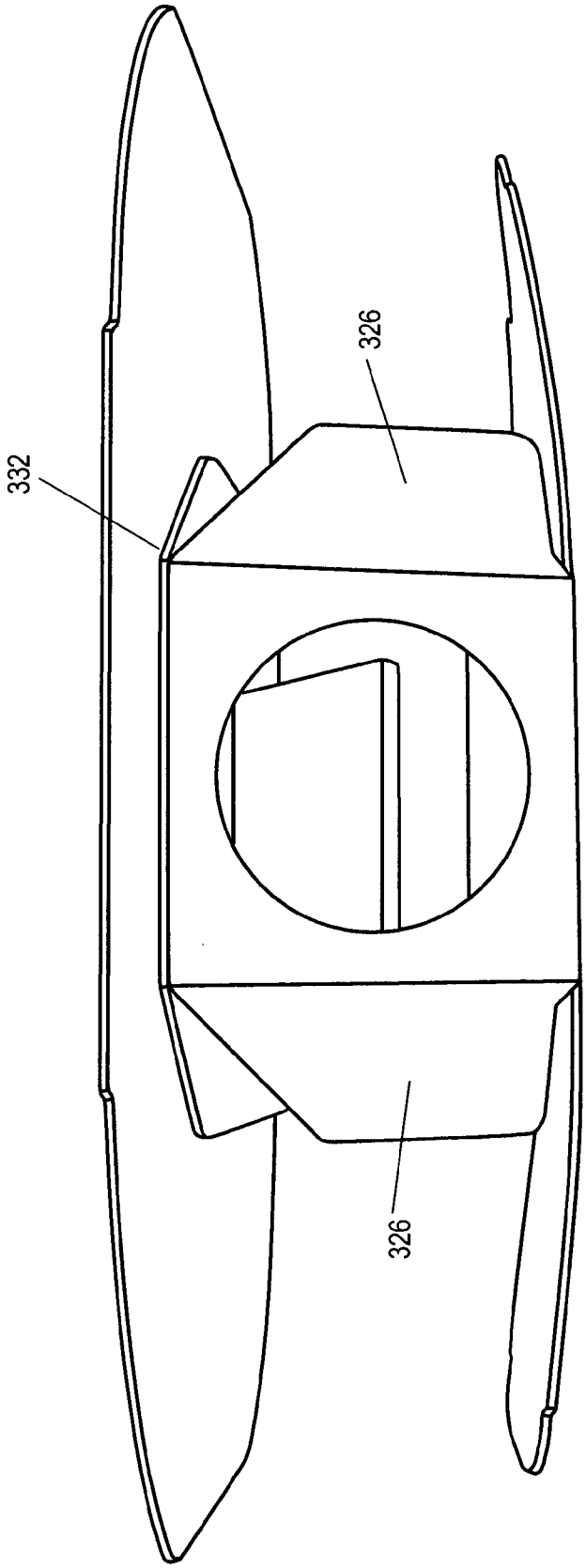


FIG. 40

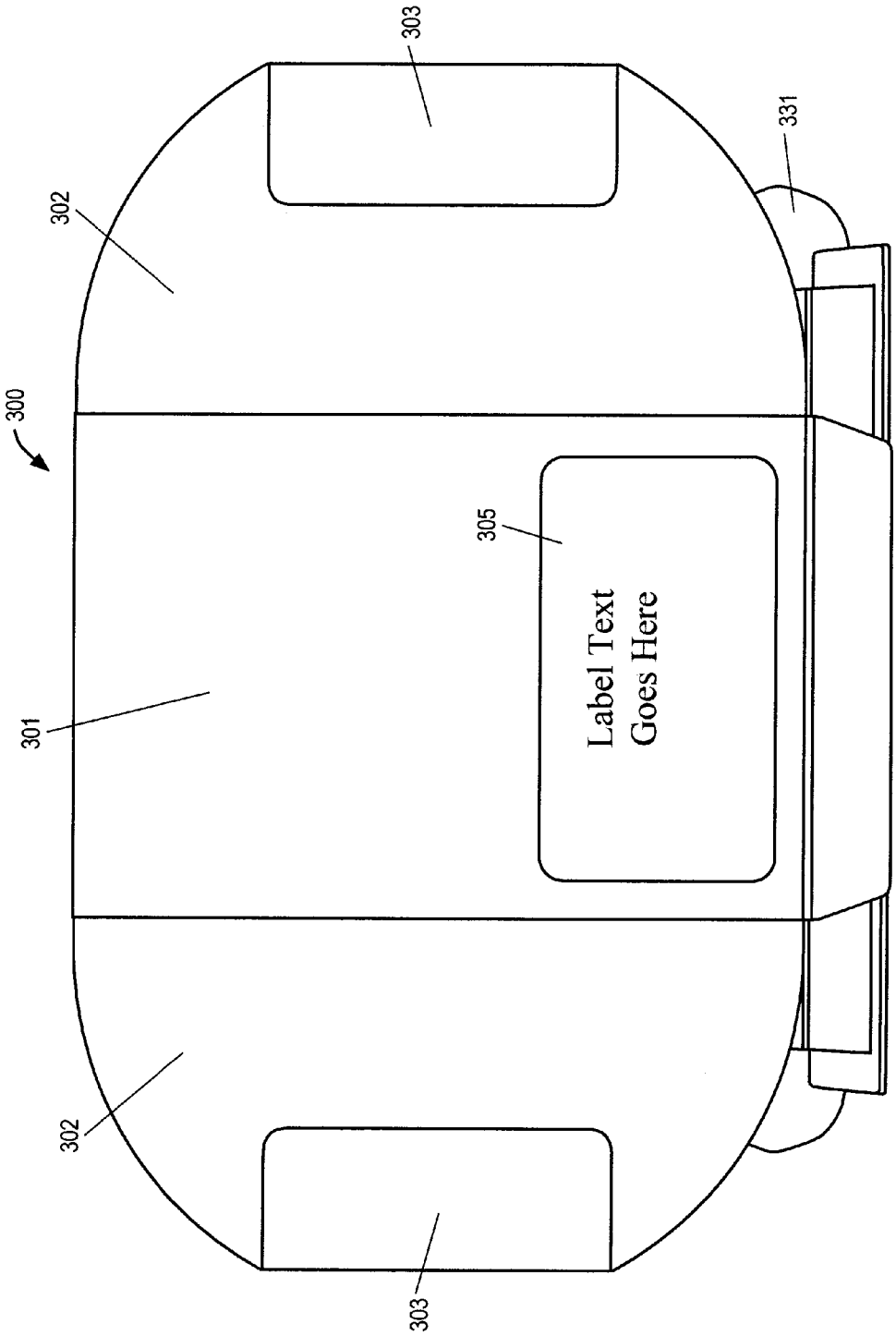


FIG. 41

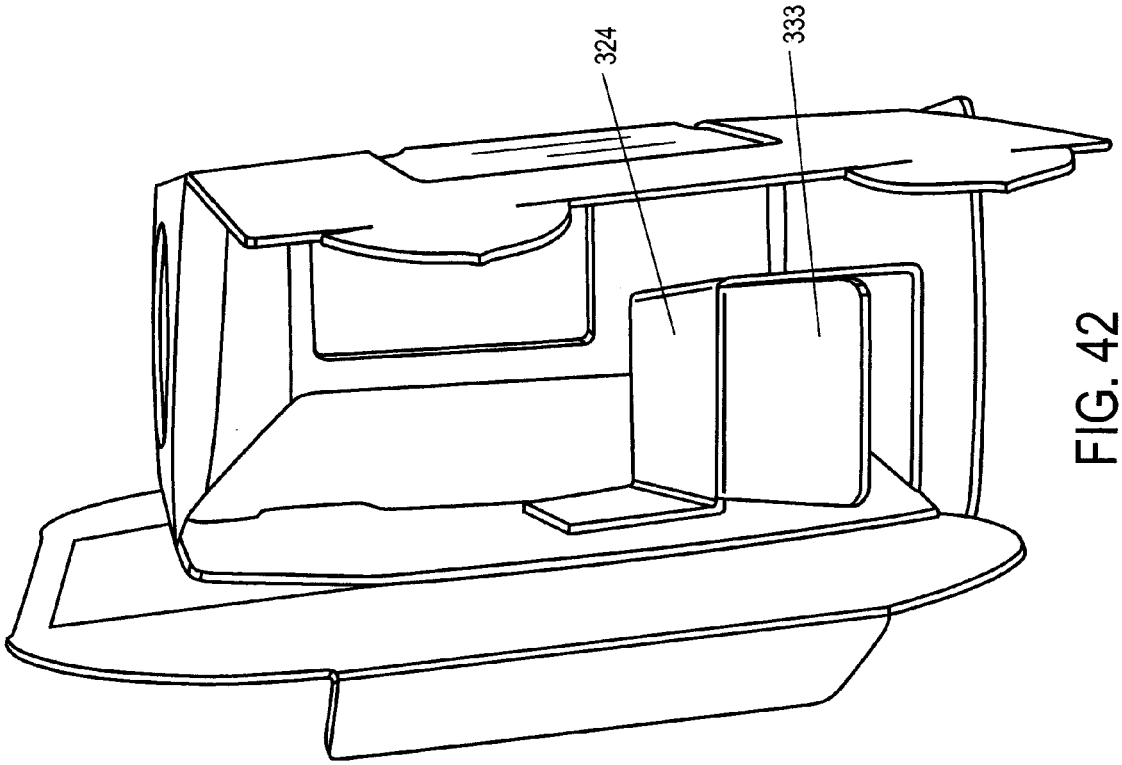


FIG. 42

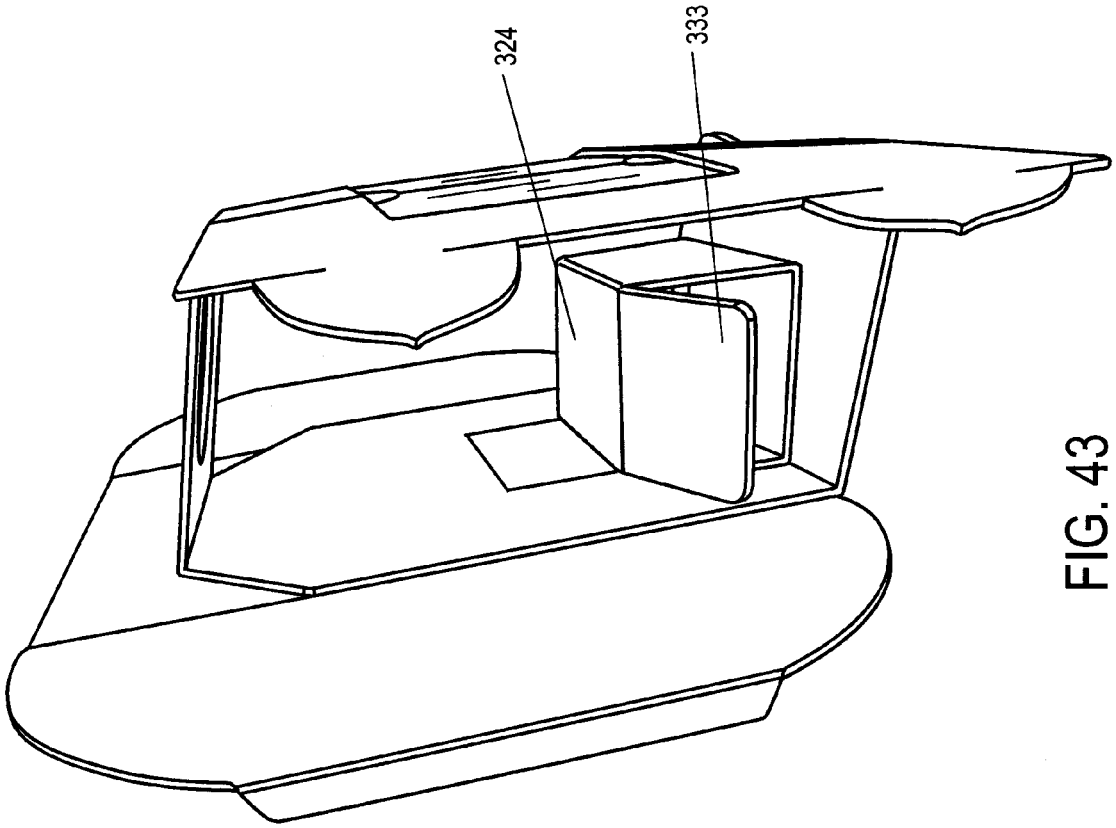


FIG. 43

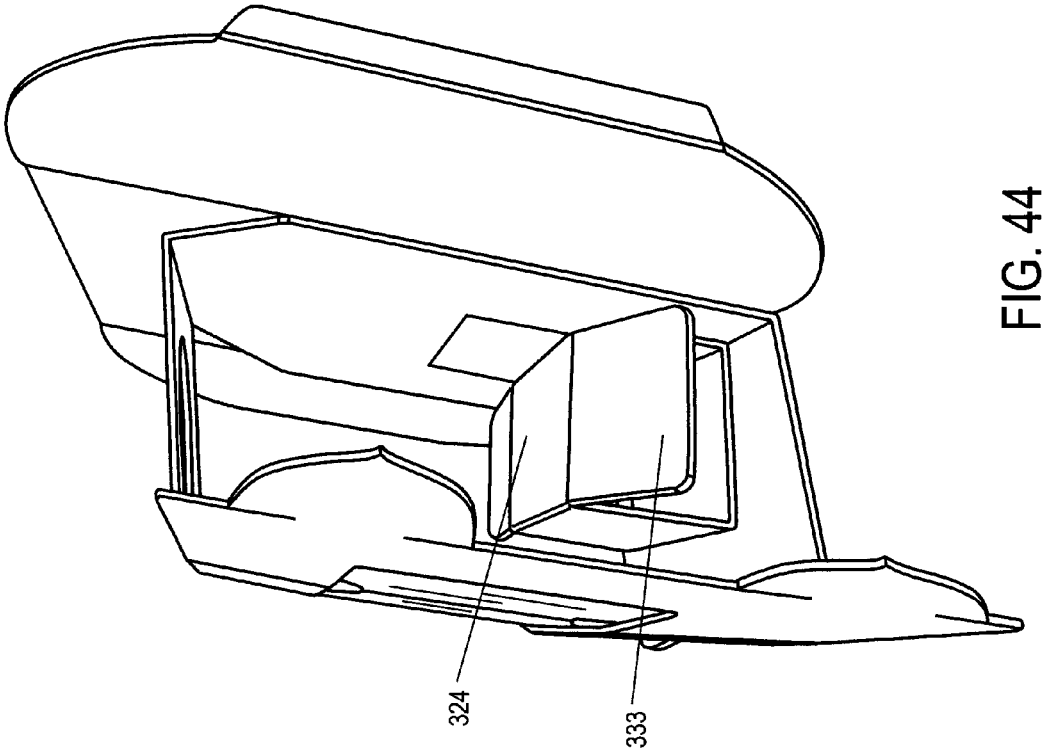


FIG. 44

# PACKAGING FOR MEDICINE FOR CLINICAL TRIALS OR COMMERCIAL USE

## CROSS-REFERENCE TO RELATED APPLICATIONS

This application claims the benefit of U.S. Provisional Patent Application No. 61/714,536, filed Oct. 16, 2012 and entitled "Packaging for Clinical Trials," and U.S. Provisional Patent Application No. 61/830,259, filed Jun. 3, 2013 and entitled "Packaging for Clinical Trials," the entire contents of both of which are incorporated by reference herein.

## BACKGROUND OF THE INVENTION

1. The Names of the Parties to a Joint Research Agreement

There has been no joint research agreements entered into with any third parties.

2. Field of the Invention

Embodiments of the present invention relate generally to packaging for clinical trials. In particular, embodiments of the present invention are directed to customized packaging for vials (injectable compounds) designed to facilitate labeling and distribution of clinical or commercial supplies.

3. Description of the Related Art

Packaging, and more specifically, packaging of vials, is well known in the art.

There are many challenges related to the packaging of products in vials and pooled supplies. Lined cartons often have issues with size. Also, packaging a pooled supply for vials has its problems in the prior art. A problem also arises when package supplies require an ancillary label at the point of distribution. This is because doing so would require a complete unpackaging of the kit.

Some prior art packagings include a removable dosage unit, which may be removed from an outer pack to prepare the medication. However, the purpose of these prior art packagings is to allow for rapid visual inspection and to be consumer friendly. These prior art packages do not allow for reduced labeling to support clinical trials.

There exists a need for a new package that can allow for reduced labeling to support clinical trials or commercial use.

## SUMMARY OF THE INVENTION

Embodiments of the present invention provide a package that can allow for reduced labeling to support clinical trials or commercial use.

Under one aspect, a package for receiving a vial includes an inner portion constructed out of a first piece of material folded into a first shape configured to receive the vial therein; an outer portion constructed out of a second piece of material folded into a second shape configured to removably receive the first shape of the inner portion; and an identifying mark or label disposed on the inner portion and being viewable when the first shape of the inner portion is disposed within the second shape of the outer portion.

In some embodiments, the inner portion includes a top portion, a bottom portion, and first and second side portions that define a first aperture configured to receive the vial, and a top flap securable to at least one of the top portion and the first and second side portions so as to retain the vial within the first aperture, the top flap having defined therein a second aperture configured to permit access to contents of the vial without removing the vial from the inner portion. The second aperture may have a diameter selected to permit a top of the vial to protrude therethrough.



Some embodiments further include a cap protector configured to be disposed over the inner portion and including an indented portion sized to accommodate and protect a top of the vial.

In some embodiments, a side aperture is defined within the side portion of the inner portion, the vial being viewable through the side aperture.

Some embodiments further include one or more tape panels that seal the inner portion in the first shape so as to evidence tampering with the inner portion.

In some embodiments, the outer portion further includes side portions that include cutouts to ease in removal of the inner portion from the outer portion.

In some embodiments, an inside of the first shape of the inner portion includes a vial support configured to stabilize the vial within the inner portion.

In some embodiments, at least one of the inner and outer portions includes a tab, slot, or flap configured to interlock the first shape of the inner portion with the second shape of the outer portion so as to permit partial removal of the inner portion from the outer portion and to inhibit complete removal of the inner portion from the outer portion.

In some embodiments, the inner and outer portions respectively are formed using a single piece of material.

Under another aspect of the present invention, a kit for preparing a package for receiving a vial includes an inner portion that is folded flat and is foldable into a first shape configured to receive the vial therein; and an outer portion that is folded flat and is foldable into a second shape configured to removably receive the first shape of the inner portion. Preferably, the inner portion has an area for receiving an identifying mark or label that is viewable when the inner and outer portions respectively are folded into the first and second shapes and the first shape is disposed within the second shape so as to form the package.

In some embodiments, the first shape into which the inner portion is foldable includes a top portion, a bottom portion, and first and second side portions that define a first aperture configured to receive the vial, and a top flap securable to at least one of the top portion and the first and second side portions so as to retain the vial within the first aperture, the top flap having defined therein a second aperture configured to permit access to contents of the vial without removing the vial from the inner portion. The second aperture may have a diameter selected to permit a top of the vial to protrude therethrough.

Some embodiments further include a cap protector configured to be disposed over the inner portion and including an indented portion sized to accommodate and protect a top of the vial.

In some embodiments, a side aperture is defined within the side portion of the inner portion, the vial being viewable through the side aperture.

Some embodiments further include one or more tape panels for use in sealing the inner portion in the first shape so as to evidence tampering with the inner portion.

In some embodiments, the outer portion further includes side portions that include cutouts to ease in removal of the inner portion from the outer portion.

In some embodiments, an inside of the first shape of the inner portion includes a vial support configured to stabilize the vial within the inner portion.

In some embodiments, at least one of the inner and outer portions includes a tab, slot, or flap configured to interlock the first shape of the inner portion with the second shape of the outer portion so as to permit partial removal of the inner

portion from the outer portion and to inhibit complete removal of the inner portion from the outer portion.

In some embodiments, the inner and outer portions respectively are formed using a single piece of material.

Under another aspect of the present invention, a method of packaging a vial includes constructing an inner portion by folding a first piece of material into a first shape configured to receive the vial therein; disposing the vial within the first shape of the inner portion; constructing an outer portion by folding a second piece of material into a second shape configured to removably receive the first shape of the inner portion; and inserting the inner portion into the outer portion. Preferably, the inner portion has an area for receiving an identifying mark or label that is viewable when the inner and outer portions respectively are folded into the first and second shapes and the first shape is disposed within the second shape so as to form a package.

In some embodiments, the inner portion includes a top portion, a bottom portion, and first and second side portions that define a first aperture configured to receive the vial, and a top flap, the method including securing the top flap to at least one of the top portion and the first and second side portions so as to retain the vial within the first aperture, the top flap having defined therein a second aperture permitting access to contents of the vial without removing the vial from the inner portion. In some embodiments, the second aperture has a diameter selected to permit a top of the vial to protrude therethrough.

Some embodiments further include disposing a cap protector over the inner portion, the cap protector including an indented portion sized to accommodate and protect a top of the vial.

In some embodiments, a side aperture is defined within the side portion of the inner portion, the vial being viewable through the side aperture.

Some embodiments further include sealing the inner portion in the first shape using one or more tape panels that evidence tampering with the inner portion.

In some embodiments, the outer portion further includes side portions that include cutouts to ease in removal of the inner portion from the outer portion.

In some embodiments, an inside of the first shape of the inner portion includes a vial support that stabilizes the vial within the inner portion.

Some embodiments further include interlocking the first shape of the inner portion with the second shape of the outer portion with a tab, slot, or flap on at least one of the inner and outer portions so as to permit partial removal of the inner portion from the outer portion and to inhibit complete removal of the inner portion from the outer portion.

In some embodiments, the inner and outer portions respectively are formed using a single piece of material.

Other embodiments of the present invention include packaging including an inner portion that includes a top portion, a bottom portion, and a side portion. The inner portion further includes a top flap, where the top flap includes a small top aperture, and a large top aperture capable of receiving a vial. The packaging further includes an outer portion. The inner portion is constructed out of at least one piece of material, where the one piece of material is folded into a desired shape capable of receiving a vial therein. The inner portion engages with the outer portion such that an identifying mark or label is capable of being viewed on the inner portion, or on a medium included in the inner portion through an aperture on the inner portion, while the inner portion and outer portion are so engaged.

Yet another embodiment of the present invention is directed to a kit for a package including at least three separate components, including: an inner portion; an outer portion; and a cap protector. The inner portion and the outer portion are folded flat, and the inner portion is capable of being refolded into a shape that is capable of receiving a vial therein. The outer portion is capable of being refolded into a shape that is capable of receiving the inner portion therein. Assembly of the package includes engaging the three components of the kit by placing the cap protector on the inner portion, and placing the inner portion within the outer portion, where the cap protector is disposed between a portion of the inner portion and a portion of the outer portion.

Other embodiments of the present invention further include a method of packaging a vial including folding a first component into an inner portion, where the inner portion includes a top portion, a bottom portion, and a side portion. The inner portion further includes a top flap, where the top flap includes a small top aperture, and a large top aperture capable of receiving a vial. The method of packaging a vial further includes folding a second component into an outer portion, inserting a vial into the large top aperture of the inner portion, sealing the vial within the inner portion by closing the top flap, inserting a cap protector on the inner portion, and inserting the inner portion into the outer portion.

Yet another embodiment of the present invention is directed to a package including an inner portion, where the inner portion includes a vial holding portion. The vial holding portion includes a plurality of sides and a hollow space capable of including at least a portion of a vial therein, where at least a portion of a top of the vial is accessible when the vial is disposed in the vial holding portion. The inner portion further includes a cooperating portion capable of slidably engaging with an outer portion, the cooperating portion including a base, a rear, and sides. The sides of the cooperating portion include flaps. The package further includes an outer portion with a front surface, a top surface, a bottom surface, and two side surfaces, where a cavity is formed within the outer portion. A cutout is formed on the side surfaces of the outer portion, which also includes an engagement portion capable of engaging the flaps. The inner portion can be slidingly engaged with the outer portion by being slid into the cavity of the outer portion. The flaps of the inner portion engage with the engagement portion of the outer portion thereby holding the inner portion within the cavity of the outer portion. An area of the sides of the cooperating portion of the inner portion are exposed through the cutout formed on the side surfaces of the outer portion when the inner portion is disposed within the cavity of the outer portion. A user may disengage the inner portion from the outer portion by grabbing the area of the sides of the cooperating portion of the inner portion that is exposed and pulling the inner portion away from the cavity of the outer portion.

Other embodiments of the present invention further include a kit for a package including at least two separate components, where the two separate components include an inner portion and an outer portion. The inner portion and the outer portion are folded flat, and the inner portion is capable of being refolded into a shape that is capable of forming a vial holding portion for receiving a vial therein and a cooperating portion for slidably engaging with the outer portion. The outer portion is capable of being refolded into a shape that is capable of receiving the inner portion in a cavity included in the outer portion. Assembly of the package includes engaging the two components of the kit by sliding the inner portion within the cavity of the outer portion.

Yet another embodiment of the present invention is directed to a method of packaging a vial including folding a first component into an inner portion, where the inner portion includes a vial holding portion with a plurality of sides and a hollow space capable of receiving at least a portion of a vial therein. At least a portion of a top of the vial is accessible when the vial is disposed in the vial holding portion. The inner portion further includes a cooperating portion capable of slidably engaging with an outer portion, the cooperating portion including a base, a rear, and sides, where the sides include flaps. The method of packaging a vial further includes inserting the inner portion into the outer portion.

## BRIEF DESCRIPTION OF THE DRAWINGS

Preferred features of embodiments of the present invention are disclosed in the accompanying drawings, wherein similar reference characters denote similar elements throughout the several views, and wherein:

FIGS. **1**A and **1**B respectively are front views of a package with flat labeling and with booklet labeling, according to an embodiment of the present invention.

FIG. **2** is a perspective view of a vial and a package in an unassembled state, according to an embodiment of the present invention.

FIG. **3** is a perspective view of a vial and an inner portion of a package in a partially assembled state, according to an embodiment of the present invention.

FIGS. **4** and **5** respectively are side and front views of an inner portion of a package in a partially assembled state and having a vial disposed therein, according to an embodiment of the present invention.

FIGS. **6** and **7** respectively are front and side views of an inner portion of a package fully assembled and closed and having a vial disposed therein, according to an embodiment of the present invention.

FIG. **8** is a perspective view of a cap protector for use with an inner portion of a package having a vial disposed therein, according to an embodiment of the present invention.

FIG. **9** is a perspective view of a cap protector engaged with a top portion of an inner portion of a package having a vial disposed therein, according to an embodiment of the present invention.

FIG. **10** is a front view of an inner portion and an outer portion of a package positioned near one another before the inner portion is slid into the outer portion, according to an embodiment of the present invention.

FIG. **11** is a side view of an inner portion partially slid into an outer portion of a package, according to an embodiment of the present invention.

FIGS. **12-14** respectively are side/rear, rear, and rear/side perspective views of an inner portion of a package having a vial disposed therein and including a tape-panel, according to an embodiment of the present invention.

FIGS. **15-20**A respectively are front, top, bottom, first side, second side, and rear views of an alternative package, according to an embodiment of the present invention.

FIG. **20**B is a rear view of an alternative package that includes a booklet label, according to an embodiment of the invention.

FIG. **21** is a front view of an inner portion and an outer portion of an alternative package positioned near one another before the inner portion is slid into the outer portion, according to an embodiment of the present invention.

FIGS. **22-24** respectively are first side, second side, and rear perspective views of an outer portion of an alternative package, according to an embodiment of the present invention.

FIGS. **25** and **26** respectively are front and bottom perspective views of an inner portion of an alternative package having a vial disposed therein, according to an embodiment of the present invention.

FIGS. **27** and **28** both are top/side perspective views of an inner portion of an alternative package having a vial disposed therein, according to an embodiment of the present invention.

FIGS. **29-32** respectively are top/rear perspective, rear, front, and top views of an inner portion of an alternative package having a vial disposed therein, according to an embodiment of the present invention.

FIG. **33** is a perspective view of an inner portion partially slid into an outer portion of an alternative package, according to an embodiment of the present invention.

FIGS. **34-38** respectively are front, rear, top, first side, and second side views of a partially assembled inner portion of an alternative package, according to an embodiment of the present invention.

FIGS. **39-41** respectively are side, top, and rear views of an alternative partially assembled inner portion of an alternative package, according to an embodiment of the present invention.

FIGS. **42-44** are side and perspective views of another partially assembled alternative inner portion of an alternative package, according to an embodiment of the present invention.

## DETAILED DESCRIPTION

Embodiments of the present invention will now be described more fully hereinafter with reference to the accompanying drawings, in which preferred embodiments of the invention are shown. This invention may, however, be embodied in many different forms and should not be construed as limited to the illustrated embodiments set forth herein. Rather, these illustrated embodiments are provided so that this disclosure will be thorough and complete and will convey the scope of the invention to those skilled in the art.

In the following description, like reference characters designate like or corresponding parts throughout the Figures. Additionally, in the following description, it is understood that terms such as "top," "bottom," "side," "front," "back," "inner," "outer," and the like, are words of convenience and are not to be construed as limiting terms.

Packagings of the prior art include vials that are labeled and packaged into an outer carton. In the prior art, the vials are considered the primary container and would need to be unpacked at the point of distribution to be further labeled with any ancillary Annex 13 label that may be required. Thus, the prior art design is not desirable for clinical trials. Additionally, many packagings of the prior art do not include features that allow a person to see the contents of the vials contained therein when the vials are still located in the packagings.

Embodiments of the present invention are directed to a carton (packaging) that may hold a vial within. An embodiment of the present invention allows a materials supply chain to label only a single level of packaging. Embodiments of the present invention are designed in a manner that will allow practitioners to prepare and administer the contents of the vial without removing the immediate container from the outer packaging. Another embodiment of the present invention includes a packaging that holds a vial (or similar), where the vial cannot be removed without intentionally destroying the

internal components of the packaging (for example, the components shown in FIGS. **4** and **27**).

Embodiments of the present invention allow for a clinical trial pooled supply for vial based/injectable compounds. Embodiments of the present invention also dramatically reduce packaging and labeling costs. Embodiments of the present invention can be used for clinical trials in countries/regions that must comply with Annex 13 requirements. Additionally, embodiments of the present invention are capable of being used in countries that have other requirements (in addition to, or in replace of, Annex 13 requirements).

Embodiments of the present invention include sealing individual vials into a primary container. In embodiments of the present invention, sealing vials into the container allows a materials supply chain to apply an Annex 13 compliant label only to the container.

Embodiments of the present invention are described throughout this application as being used to hold vials. Vials, as used throughout this application include any type of container, and are not limited to the traditional definition of vials. The contents of the vials included within the packages of embodiments of the present invention may be anything that a person skilled in the art would desire to be present in a container. The vials may also be empty. The vials that may be included within the packages of embodiments of the present invention may include caps and/or rubber stoppers or the like. The caps may include flip tops, twist tops, plug tops, or the like. The rubber stoppers, caps, or the like may be made of a material that is meant to be punctured by a needle for containing an injectable medicament or the like.

Moreover, embodiments of the present invention may be used to package other items instead of, or in addition to, vials.

As shown in the figures, in an embodiment of the present invention, when the package is opened, the protective flip-cap and rubber stopper are fully accessible for preparation, dosing, and administration of the contents.

An embodiment of the present invention includes a die cut top flap. It will be apparent to one skilled in the art that the top flap may include an aperture that is made through other methods other than die cutting as well. The die cut top flap ensures the vial cannot be removed after the top is folded over the top of the vial (e.g., the neck of the vial).

Embodiments of the present invention may also include tape panels. In an embodiment of the present invention, the tape panels include an aggressive tamper evident tape/adhesive that acts to effectively seal the primary container in a closed position. In an embodiment of the present invention, the only way to remove the vial is to destroy the package.

Preferably, when an embodiment of the present invention is assembled, the carton has only one side which needs to be sealed, which may be the top side of the carton (unlike most prior art cartons, which are sealed both at the top and on the bottom).

As described in greater detail below with reference to the figures, multiple apertures are included in certain embodiments of the present invention. The apertures are present to facilitate preparation for dosing by allowing a viewing window for the practitioner to inspect the contents of the vial before dosing. The apertures may have additional purposes as well, which would be apparent to a person of ordinary skill.

Embodiments of the present invention may include an outer cover that provides protection from light and any other elements during storage and shipment.

An embodiment of the present invention includes a carton that has been developed for the purpose of reducing the labeling required for parenteral dosage forms.

As used throughout this application, the package of embodiments of the present invention may be similar to a carton. That is, embodiments of the present invention may be constructed out of similar materials that are used for constructing the cartons of the prior art. Therefore, carton and package may be used synonymously throughout this application when referring to embodiments of the present invention. However, the packages of embodiments of the present invention may also be constructed out of different materials, including, but not limited to, paper or wood products, plastic, metal, glass, fiberboard, composite materials, and the like. One skilled in the art will understand that different materials, other than the materials described herein, may be utilized to construct the packages of embodiments of the present invention, and embodiments of the present invention are not limited to the materials described herein or shown in the figures.

FIG. **1**A is a front view of a package **1** constructed according to an illustrative embodiment of the present invention, which includes a pack-out design for injectable, vial based compounds. The package **1** shown in FIG. **1**A includes an inner portion **100** having a vial disposed therein (vial not visible in FIG. **1**A), and an outer portion **200**. As shown in FIG. **1**A, the inner portion **100** may be fully inserted within the outer portion **200**; as described in greater detail below with reference to FIG. **10**, the inner portion may be fully or partially disengaged from the outer portion **200**, which may occur through a sliding motion or the like. Embodiments of the present invention also include packages in which the inner portion **100** and the outer portion **200** are engaged through means other than a sliding motion, for example, including, but not limited to, the outer portion **200** wrapping around the inner portion **100**. The outer portion **200** includes a back portion **202** (not visible in FIG. **1**A), side portions **203** optionally having cutouts **207** defined therein, a top portion **204**, and a bottom portion **205**. The inner portion **100** includes a front portion **101**, a back portion **102** (not visible in FIG. **1**A), a top portion **104**, a bottom portion **105**, and side portions **103**. As described in greater detail below with reference to FIGS. **8** and **9**, and optional cap protector may be arranged over the top of a vial disposed within the inner portion **100** (vial not visible in FIG. **1**A). In the illustrated embodiment, the outer portion **200** acts as an outer sleeve for the inner portion **100** and optional cap protector **10** to be received within.

As shown in FIG. **1**A, a label **2** may be affixed to the front portion **101** of the inner portion **100** of the package **1**, preferably which is viewable regardless of the relative arrangement spatial arrangement of inner portion **100** and outer portion **200**, e.g., may be seen even before the inner portion **100** is removed (separated/slid out) from the outer portion **200**. The label **2** may include any information that a person skilled in the art would contemplate being present on a label. For example, the label may include identifying marks such as Protocol identification **4**, lot identification **5**, medication identification **6**, subject identification **7**, dates **8**, barcodes **9** (e.g., QR codes), warnings, designs, symbols, pictures, or anything that one skilled in the art may desire to be present on such a package **1**. The label **2** may be flat or planar, as illustrated in FIG. **1**A, or alternatively may be a booklet label, which may include one or more leaflets that include study information and/or regulatory information. Preferably, the booklet label may be prominently visible and accessible at all times during shipment and storage. For example, FIG. **1**B depicts a generic booklet label **2***a* affixed to the front portion **101** of the inner portion **100** of the package **1**, which is viewable regardless of the relative spatial arrangement of inner portion **100** and outer portion **200**, e.g., may be seen even before the inner portion **100** is removed (separated/slid

out) from the outer portion **200**. A flat label such as label **2** illustrated in FIG. **1**A may be applied to a generic booklet label **2***a* such as illustrated in FIG. **1**B. Alternatively, the booklet label or the information therein may be affixed within inner portion **100** (primary container), e.g., may be affixed to the back side of front portion **101** of the inner portion **100**, so that the label or information may be seen only when the inner portion **100** is partially or fully removed from the outer portion **200**.

One skilled in the art would readily understand that the package **1** may be any color or variety of colors, and the label **2** may be any color or variety of colors. Further, an embodiment of the present invention may not include a label on the front portion **101** of the inner portion **100**.

As shown in the embodiment illustrated in FIG. **1**A, the side portions **203** of the outer portion **200** may include cutouts **207** to ease in removing the inner portion **100** from the outer portion. Additionally, as shown in FIG. **1**A, the package **1** further may include a cap protector **10**, which is a thick protective portion disposed between the top portion **104** of the inner portion **100** and the top portion **204** of the outer portion.

FIG. **2** is a perspective view of a vial **3** and of the components of the package **1** in an unassembled state, according to an embodiment of the present invention. As depicted in FIG. **2**, the package **1** may include many apertures that may serve a variety of distinctive functions. For example, in an embodiment of the present invention, the cap protector **10** may include a thickness that accommodates an indented portion **11**. The indented portion **11** may be sized to fit a vial top **12** within in order to protect said vial top **12**. In an embodiment, package **1** is designed so that it can be shipped to a vendor or distributor as three flat components (the inner portion **100**, the outer portion **200**, and the cap protector **10**), which may then be assembled to form the package **1** such as illustrated in FIG. **1**A. Preferably, such components also may include specific training and support materials so that a packaging vendor or distributor can utilize the three flat components and form the package **1**.

FIG. **3** depicts the inner portion **100** of the package **1** in a semi-assembled state. After the inner portion **100** (which may also be referred to in the art as the primary container) is partially assembled, the vial **3** is placed into the inner portion **100** through the top portion **104**. More specifically, in the embodiment shown in FIG. **3**, the top portion **104** of the inner portion **100** includes a large top aperture **106** and a top flap **108** with a small top aperture **107**. The large top aperture **106** is sized such that the vial **3** can be inserted into the inner portion **100** through the large top aperture **106**. The top flap **108** then may be lowered over the vial and sealed into place, e.g., using glue, a tape-panel, pressure-sensitive adhesive, or the like, as described in greater detail below with reference to FIG. **6**. The small top aperture **107** is sized such that the vial top **12** protrudes through the small top aperture **107** when the top flap **108** is lowered over the vial; optionally, cap protector **10** then may be disposed over vial top **12** such that indented portion **11** engages with vial top **12**, such that vial **3** can thus optionally be further protected by the cap protector **10**, in addition to protection provided by inner portion **100**.

For example, as further shown in FIGS. **3**, **4**, and **5**, in which the inner portion **100** is partially assembled and is disengaged from outer portion **200**, the inside of the inner portion **100** may include vial supports **110** to help stabilize the vial when it is disposed inside the inner portion **100**. The outside of the inner portion **100** may also include additional apertures. For example, the outside of the inner portion **100** may include a vial label viewing aperture **111** and a side tab aperture **112**. The outside of the inner portion **100** in an embodiment of the present invention may also include a side tab **113**. Side tab aperture **112** and side tab **113** may be used to lock inner portion **100** to outer portion **200**.

FIGS. **6** and **7** show the inner portion **100** of the package **1** fully assembled and closed. In the illustrated embodiment, the top flap **108** overhangs approximately 0.25 inches, and folds over a portion of the inner portion **100** (primary container), which may be the front portion **101**, back portion **102**, or side portion **103**. When an inner portion **100** of an embodiment of the present invention is assembled, the top flap **108** may be secured by glue, a tape-panel, a pressure sensitive adhesive strip that may be exposed when the liner is removed by a packager, or other suitable method of securement.

In embodiments of the present invention, one skilled in the art will readily understand that more or less apertures may be added to the inner and outer portions, and the number of apertures present is not limited to the number shown in the figures. For example, there may be additional apertures relative to those shown in FIG. **6**. These additional apertures may increase the amount of incoming light in order to facilitate preparation of the compound for further preparation and administration.

FIG. **8** depicts the cap protector **10**, which may serve as a protector for vial top **12** as well as the top flap **108**. In an embodiment of the present invention, the cap protector **10** may be utilized as a spacer to ensure a snug fit of the inner portion **100** within the outer portion **200**. The cap protector **10** protects the vial top **12**, which may include a vial flip-cap. FIG. **9** shows the cap protector **10** engaged with the top portion **104** of the inner portion **100** of the package **1** in an embodiment of the present invention.

As shown in FIGS. **10** and **11**, in an embodiment of the present invention, the inner portion **100** (primary container) slides into the outer portion **200** (outer sleeve). An embodiment of the present invention may include a locking feature on the outer portion **200** to prevent the inner portion **100** from inadvertently falling out. In another embodiment of the present invention, the locking feature is located on the inner portion **100** of the package **1**. The locking feature may include, but is not limited to, an adhesive, a flap, a latch, a notch, a punch, or the like. In some embodiments, the inner and outer portions include features that lock to one another so as to inhibit full removal of the inner portion **100** from the outer portion **200** after the inner portion **100** is inserted into the outer portion **200**.

FIGS. **12-14** depict an inner portion **100** that include additional security features, according to an embodiment of the present invention. Specifically, in the exemplary embodiment shown in FIGS. **12-14**, an inner portion **100** of an embodiment of the present invention that includes tape panels **114**. The tape panels **114** may include an aggressive tamper evident tape/adhesive that acts to effectively seal the inner portion **100** in a closed position, as shown in FIG. **12-14**. In an embodiment of the present invention, the only way to remove the vial is to destroy the inner portion **100**.

One of the potential uses of embodiments of the present invention may be for drug companies' products that are contained in vials for commercial use, or for use in global clinical studies including, but not limited to, pooled supplies. Embodiments of the present invention allow a materials supply chain or similar to have supplies permanently sealed into a secondary package so that companies do not have to label both levels of packaging (i.e., vials and cartons and/or both primary and secondary packages) with trial- and country-specific labeling. In doing so, embodiments of the present invention will reduce the cost of packaging and labeling. Embodiments of the present invention also may facilitate the

packaging of pooled supplies by ensuring that all labeling is easily accessible for labeling at the point of distribution while maintaining global regulatory compliance, including, but not limited to, Annex 13 compliance (for investigational medicinal products). Additionally, embodiments of the present invention may ensure that there is empty space surrounding the vial, which can reduce the risk of breakage without requiring a separate cell divider, foam liner, or the like.

The use of embodiments of the present invention in pooled supplies, e.g., for use in clinical trials or for commercial use, will now be discussed.

Embodiments of the present invention may be packaged and labeled at a vendor, e.g., a packaging or distribution vendor, with appropriate labeling with the exception of study specific Annex 13 information, which prohibits pooling by making the labeling protocol specific (Protocol/Study Number, European Union Drug Regulating Authorities Clinical Trials Number and sponsor information). The generically labeled kits that may be included in the packaging of embodiments of the present invention may be kept in inventory as pooled supplies until they are requested for a specific study. When a shipping request is raised, a Just In Time (JIT) label may be printed at the point of distribution, and may include the Annex 13 information. This label may be applied to embodiments of the present invention just before shipping to a clinical trial site. Using embodiments of the present invention, a packaging or distribution vendor will only need to apply one label. Traditional packaging of the prior art would require that a packaging or distribution vendor generates two labels, open each kit, apply a label to the immediate container (vial), repack the vial in the carton, seal the carton, and apply a label to the carton.

The use of embodiments of the present invention in non-pooled supplies, e.g., for use in clinical trials or for commercial use, will now be discussed.

In non-pooled supplies, vials may be sealed into the packaging of embodiments of the present invention and a single label may be applied to a portion of the package Embodiments of the present invention will allow a materials supply chain to have supplies permanently sealed into a secondary package so that they do not have to label both levels of packaging (vials and cartons). Thus, embodiments of the present invention will reduce the cost of packaging and labeling. Traditional packaging would require that the vendor apply a label to the immediate container (vial), place a liner in the carton (if needed), pack the vial in the carton, seal the carton, and apply a label to the carton.

In an embodiment of the present invention, the finished goods may be stored at the point of distribution labeled with a generic booklet label (without any protocol/study specific information in the case of a clinical trial, or without any patient-specific information in the case of a commercial product). The Protocol Number and European Union Drug Regulating Authorities Clinical Trials Number, or any other patient-specific information, may be printed on an ancillary label which may be affixed to the booklet cover at the point of distribution just before shipment to the clinical or commercial site.

An alternate embodiment of the present invention is shown in FIGS. **15-41**.

As shown in the figures, in an embodiment of the present invention, when the package is opened, the top of the vial is fully accessible for preparation, dosing, and administration of the contents.

When an embodiment of the present invention is assembled, the inner portion is held within the outer portion to form a carton. The carton can release the inner portion from the outer portion through a user squeezing side tabs and sliding the inner portion out from engagement with the outer portion.

As shown in the figures, multiple windows may be included in an embodiment of the present invention. The windows are present to facilitate preparation for dosing by allowing a viewing area for the practitioner to inspect the contents of the vial before dosing. The windows may have additional purposes as well, which would be apparent to a person of ordinary skill.

FIGS. **15-19** respectively illustrate the front, top, bottom, first side, and second side, views of a package design for injectable, vial based compounds according to a preferred embodiment of the present invention, and FIGS. **20**A-**20**B respectively illustrate rear views of such a package design having either a flat label or a booklet label. The package **21** shown in FIGS. **15-20**B includes an inner portion **300** and an outer portion **400**, although only outer portion **400** is readily visible in FIGS. **15**, **16**, and **17**. As shown in these figures and perhaps best seen in FIGS. **18**, **19**, and **20**A, when the inner portion **300** is engaged with the outer portion **400** such that cavity **401** defined within outer portion **400** receives the inner portion, only the rear **301** and a small area of the cooperating portion sides **302** of the inner portion **300** are visible. The rear **301** of the inner portion **300** is visible because of the cavity **401** in the rear of the outer portion **400**. The outer portion **400** includes a front surface **402**, side surfaces **403**, a top surface **404**, and a bottom surface **405** that collectively define cavity **401**. The cooperating portion sides **302** of the inner portion **300** are visible because of cutouts **408** included on the side surfaces **403** of the outer portion **400**. The side surfaces **403** of the outer portion **400** also include substantially semicircular shaped slits **406**, which create substantially semicircular flaps **407** that engage with the inner portion **300** as explained in more detail below. In an embodiment of the present invention, the outer portion **400** acts as an outer sleeve for the inner portion **300** to be received within.

As shown in FIG. **17**, the bottom surface **405** of the outer portion **400** includes a label **22** in a preferred embodiment of the present invention. The label **22** may include any information that a person skilled in the art would contemplate being present on a label. For example, the label may include identifying marks such as Protocol identification, lot identification, medication identification, subject identification, dates, barcodes, warnings, designs, symbols, pictures, manufacturer information, supplier information, physician information, or anything that one skilled in the art would desire to be present on such a package **21**. The label **22** may be flat or planar, or alternatively may include a booklet label, which may comprise study information and/or regulatory information, such as described above with reference to FIG. **1**A. Moreover, only ancillary label text may be included on the label **22** shown in FIG. **17**, while the main label **399** or **399***a* of a preferred embodiment of the present invention is affixed to the inner portion **300**, shown, for example, in FIG. **20**A or **20**B respectively (i.e., the rear **301** of the inner portion **300**). In other words, in a preferred embodiment of the present invention the main clinical label is applied to the inner portion **300**. Applying the label to the exterior face (the rear **301** of the inner portion **300**) when the inner portion **300** is engaged to the outer portion **400** will allow the pharmacist to see the label when the supplies are on the shelf, e.g., as illustrated in FIG. **20**A or **20**B. Alternatively, if a main label such as illustrated in FIG. **17** is applied only to the bottom surface **306**, the label may not be visible when the supplies are packaged on a shelf. FIG. **26** shows another label **305** disposed on the bottom

surface **306** of the inner portion **300**. This label **305** may include ancillary label text in an embodiment of the present invention.

One skilled in the art would readily understand that the package **21** may be any color or variety of colors, and the label **22** may be any color or variety of colors. Further, an embodiment of the present invention may not include a label.

As shown in FIGS. **21-38**, the inner portion **300** in a preferred embodiment of the present invention holds a vial **23**. In its assembled state, the inner portion **300** includes a vial holding portion **320** and a cooperating portion **310** designed to engage with the outer portion **400**. The cooperating portion **310** includes the rear **301** and cooperating portion sides **302** of the inner portion **300**. In other words, the cooperating portion **310** allows the inner portion **300** to engage with the outer portion **400** in an embodiment of the present invention. Specifically, in an embodiment of the present invention, the sides **302** are made from the same piece as the rear **301** and are folded inward to create a box shape that can be slid into the cavity **401** of the outer portion **400**. In fact, in a preferred embodiment of the present invention, the entire inner portion **300** is a single component that can be folded and adhered to form the shape shown in the figures. The cooperating portion sides **302** include substantially rectangular flaps **303**, perhaps best seen in FIG. **29**, that are folded down and adhered to the rear portion of the cooperating portion sides **302** in order to cooperate with the substantially semicircular shaped slits **406** formed on the outer portion **400**, perhaps best seen in FIGS. **22** and **23**, when the inner portion **300** is slid into the cavity **401** of the outer portion **400**. The substantially rectangular flaps **303** may be adhered to the cooperating portion sides **302** by glue, tape, or the like. In an embodiment of the present invention, the substantially rectangular flaps **303** are adhered to the cooperating portion sides **302** by a foam glue composite **330** that enables the flaps **303** to project slightly from the cooperating portion sides **302**. FIG. **34-38** illustrate various views of the inner portion **300** in partially assembled states, so as to further illustrate relationships between the various components of the inner portion.

The base **304** of the cooperating portion **310** also acts as a base for the vial holding portion **320**. The bottom surface **306** of the base **304** optionally includes a label **305** in an embodiment of the present invention, as perhaps best seen in FIG. **26**. The label **305** may include the same information as the label **22** on the outer portion **400**, or it may include different information.

The vial holding portion **320** is part of the single component that also makes up the cooperating portion **310** in an embodiment of the present invention. A portion extending from the base **304** is folded numerous times to form the shape of the vial holding portion **320** shown in the figures. Specifically, the vial holding portion **320** includes a front **321**, sides **322**, a top **323**, and a vial support **324** that rests on the base **304**. In an embodiment of the present invention, the vial holding portion **320** further includes a viewing window **325** that may be integrally coupled with the single component that creates the inner portion **300**. The viewing window **325** may be constructed out of a clear or translucent material so that the contents of the vial **23** (or an optional label on the vial **23**) are visible. The viewing window **325** may also simply be formed from cutouts in the front **321** and/or sides **322** of the vial holding portion **320**. The sides **322** of the vial holding portion **320** may be secured onto extensions **326** of the rear, top, and/or bottom portion in order to form a substantially rectangular box shape, which may be accomplished through the use of an adhesive, tape, or the like. In an embodiment of the present invention, the top **323** of the vial holding portion **320** includes a top aperture **327** such that the vial top **24** protrudes therethrough. The extensions **326** may include, or may be replaced by, a receiving flap to secure closure of the vial holding portion sides **322** in an embodiment of the present invention.

In a preferred embodiment of the present invention, the vial top **24** is exposed from the vial holding portion **320** of the inner portion **300** such that a user may utilize the contents of the vial **23** while keeping the vial inside of the inner portion **300**. In an embodiment of the present invention, removal of the vial **23** will cause the package **21**, and more specifically the inner portion **300**, to be destroyed. In this manner the package **21** is tamper evident. For example, vial holding portion **320** may include one or more tape-panels such as described above with reference to FIGS. **12-14**.

As perhaps best seen in FIG. **33**, when the inner portion **300** is slid into the outer portion **400**, the substantially rectangular flaps **303** travel past the substantially semicircular shaped slits **406**, and the ends **328** of the flaps **303** engage the slits **406** thereby holding the inner portion **300** inside of the outer portion **400**. The slits **406** and flaps **407** are part of reusable locking system that works with the flaps **303** of the cooperating portion sides **302** to secure the inner portion **300** to the outer portion **400** in an embodiment of the present invention. In a preferred embodiment of the present invention, to remove the inner portion **300** from the outer portion **400**, a user simultaneously presses the substantially semicircular flaps **407** on the outer portion **400**, which then presses the substantially rectangular flaps **303** toward the cooperating portion sides **302** of the inner portion **300** and out of engagement with the substantially semicircular shaped slits **406**. A user may then slide the inner portion **300** out from the outer portion **400**. In an embodiment of the present invention, a user may not remove the inner portion **300** from the outer portion **400** without pressing the flaps **407**. In another embodiment of the present invention, simply pulling the exposed portion of the cooperating portion sides **302** of the inner portion **300** with ample force will remove the inner portion **300** from the outer portion **400**.

FIGS. **39-41** depict an inner portion **300** constructed in accordance with yet another embodiment of the present invention. The inner portion **300**, shown in various states of partial assembly in these figures, includes vial holding portion sides **322** that have tabs **331** that fit into slots **332** on the rear of the vial holding portion **320** in order to create the shape of the vial holding portion **320**. In other words, the sides **322** of the vial holding portion **320** in this embodiment are not secured onto extensions in order to form a substantially rectangular box shape, but are instead secured via the tabs **331** being inserted into slots **332**. In an embodiment of the present invention, the tabs **331** may be part of a dagger locking mechanism, where the tabs **331** are dagger locking tabs and the slots **332** are designed to accept the dagger locking tabs. Additionally, the embodiment of the present invention shown in FIGS. **39-41** optionally includes a metallic-appearing laminated finish, although one skilled in the art will recognize that the appearance and finish of the packagings described herein is not limited by what is shown in the figures. Moreover, the embodiment of the present invention shown in FIGS. **39-41** optionally includes a label **305** located on the rear **301** of the inner portion **300**. One skilled in the art will recognize that a label may be affixed to many portions of embodiments of the present invention and the label location is not limited to the locations shown/described herein.

FIGS. **42-44** depict a partially assembled inner portion **300** constructed in accordance with another embodiment of the present invention that is similar to the embodiment shown in

FIGS. **39-41**, but also includes additional support structures on the vial support **324** in the form of vertical support flaps **333**. The vertical support flaps **333** are located on both sides of the vial support **324** to enhance the strength of the vial support **324**. The vertical support flaps **333** are in the form of vertical fold-down flaps that provide added strength/support when engaged and locked into place when the inner portion **300** of the package **21** is erected/assembled and the vial holding portion sides **322** are assembled using the tabs **331** and slots **332** and/or the extensions **326** or the like. A person of ordinary skill will recognize that any suitable embodiment of the present invention may include vertical support flaps **333** to assist in strengthening the vial support **324**, and the vertical support flaps **333** are not limited to the embodiment shown in FIGS. **42-44**.

An embodiment of the present invention is designed so that it can be shipped to a vendor as two substantially flat components (the inner portion **300** and the outer portion **400**), which may then be assembled to form the package **21**. Embodiments of the present invention may include specific training and support materials so that a packaging vendor can utilize the two flat components and form the package **21**.

FIGS. **34-41** depict the inner portion **300** of the package **21** in a semi-assembled state. The vial **23** is placed into the vial holding portion **320** of the inner portion **300** through openings in the side **322** of the vial holding portion **320** (before the sides **322** of the vial holding portion **320** are secured in place forming a substantially rectangular box shape).

FIG. **21** depicts the inner portion **300** removed from the outer portion **400**.

As depicted in FIG. **24**, in an embodiment of the present invention, the outer portion **400** is made from one solitary piece that is folded over itself for enhanced strength. The inner portion **300** may be similarly constructed.

In embodiments of the present invention, one skilled in the art will readily understand that other types of adhesives may be used other than tape or glue to hold the package **21** in the correct shape. Additionally, other securing means may be used altogether, such as clips, docking means, buttons, tabs, friction fits, hook and loop, joint fit, wedge fit, and the like.

As shown in FIG. **33**, in an embodiment of the present invention, the inner portion **300** slides into the outer portion **400**. An embodiment of the present invention may include a locking feature on the outer portion **400** to prevent the inner portion **300** from inadvertently falling out. The locking feature may be the flaps **303**, **407** and slits **406** explained herein, or any other means known to a person of ordinary skill in the art, such as an adhesive, a flap, a latch, a notch, tabs, a punch, or the like.

Embodiments of the present invention may include tape panels **329** as a means for adhering to the desired shape of the package **21**. The tape panels **329** may include an aggressive tamper evident tape/adhesive that acts to effectively seal the inner portion **300** in its desired configuration. In an embodiment of the present invention, the only way to remove the vial **23** is to destroy the inner portion **300**.

Embodiments of the present invention also include the methods of making the packages described herein, as well as the methods of using the packages in supplying clinical or commercial sites and the like.

While preferred embodiments of the invention are described herein, it will be apparent to one skilled in the art that various changes and modifications may be made. For example, although embodiments of the present invention offer advantages when used for shipping to clinical sites for use in clinical trials, one skilled in the art will understand that the embodiments of the present invention may also be used for other purposes, including but not limited to commercial use. The appended claims are intended to cover all such changes and modifications that fall within the true spirit and scope of the invention.

## LIST OF REFERENCE NUMBERS INCLUDED IN FIGURES

The following is a list of reference numbers used in the attached Figures for embodiments of the present invention:

(1) Package
(2) Label
(2a) Booklet
(3) Vial
(4) Protocol ID
(5) Lot ID
(6) Medication ID
(7) Subject ID
(8) Date
(9) Barcode
(10) Cap Protector
(11) Indented Portion
(12) Vial Top
(21) Package
(22) Label
(23) Vial
(24) Vial Top
(100) Inner Portion
(101) Front Portion
(102) Back Portion
(103) Side Portion
(104) Top Portion
(105) Bottom Portion
(106) Large Top Aperture
(107) Small Top Aperture
(108) Top Flap
(110) Vial Support
(111) Vial Label Viewing Aperture
(112) Side Tab Aperture
(113) Side Tab
(114) Tape Panel
(200) Outer Portion
(202) Back Portion
(203) Side Portion
(204) Top Portion
(205) Bottom Portion
(207) Cutout
(300) Inner Portion
(301) Rear
(302) Cooperating Portion Side
(303) Flaps
(304) Base
(305) Label
(306) Bottom Surface
(310) Cooperating Portion
(320) Vial Holding Portion
(321) Front
(322) Vial Holding Portion Side
(323) Top
(324) Vial Support
(325) Viewing Window
(326) Extensions
(327) Top Aperture
(328) Ends (Flaps)
(329) Tape Panel
(330) Foam Glue Composite
(331) Tabs
(332) Slots
(333) Vertical Flaps
(333') Alternative Vertical Flaps
(400) Outer Portion
(401) Cavity
(402) Front Surface
(403) Side Surface
(404) Top Surface
(405) Bottom Surface
(406) Slits

-continued

| |
|---|
| (407) Flaps |
| (408) Cutout |

We claim:

1. A package for receiving a vial, the package comprising:

an inner portion constructed out of a first piece of material folded into a first shape configured to receive the vial therein;

an outer portion constructed out of a second piece of material folded into a second shape configured to removably receive the first shape of the inner portion, the outer portion defining an opening in at least the second shape; and

an identifying mark or label disposed on the inner portion and being viewable via the opening when the first shape of the inner portion is disposed within the second shape of the outer portion.

2. The package of claim 1, wherein the inner portion comprises a top portion, a bottom portion, and first and second side portions that define a first aperture configured to receive the vial, and a top flap securable to at least one of the top portion and the first and second side portions so as to retain the vial within the first aperture, the top flap having defined therein a second aperture configured to permit access to contents of the vial without removing the vial from the inner portion.

3. The package of claim 2, wherein the second aperture has a diameter selected to permit a top of the vial to protrude therethrough.

4. The package of claim 1, wherein a side aperture is defined within a side portion of the inner portion, the vial being viewable through the side aperture.

5. The package of claim 1, further comprising one or more tape panels that seal the inner portion in the first shape so as to evidence tampering with the inner portion.

6. The package of claim 1, wherein the outer portion further comprises side portions that include cutouts to ease in removal of the inner portion from the outer portion.

7. The package of claim 1, wherein an inside of the first shape of the inner portion comprises a vial support configured to stabilize the vial within the inner portion.

8. The package of claim 1, wherein at least one of the inner and outer portions comprises one of a tab, slot, and flap configured to interlock the first shape of the inner portion with the second shape of the outer portion so as to permit partial removal of the inner portion from the outer portion and to inhibit complete removal of the inner portion from the outer portion.

9. The package of claim 1, wherein the inner portion is formed using a single piece of material, and wherein the outer portion is formed using a single piece of material.

10. The package of claim 1, wherein the opening is defined by a window in the outer portion.

11. A package for receiving a vial, the package comprising:

an inner portion constructed out of a first piece of material folded into a first shape configured to receive the vial therein;

an outer portion constructed out of a second piece of material folded into a second shape configured to removably receive the first shape of the inner portion;

an identifying mark or label disposed on the inner portion and being viewable when the first shape of the inner portion is disposed within the second shape of the outer portion; and

a separate cap protector configured to be disposed over the inner portion and comprising an indented portion sized to accommodate and protect a top of the vial.

12. A kit for preparing a package for receiving a vial, the kit comprising:

an inner portion that is flat and is foldable into a first shape configured to receive the vial therein; and

an outer portion that is flat and is foldable into a second shape configured to removably receive the first shape of the inner portion, the outer portion defining an opening in at least the second shape,

the inner portion having an area for receiving an identifying mark or label that is viewable via the opening when the inner and outer portions respectively are folded into the first and second shapes and the first shape is disposed within the second shape so as to form the package.

13. The kit of claim 12, further comprising a cap protector configured to be disposed over the inner portion and comprising an indented portion sized to accommodate and protect a top of the vial.

14. The kit of claim 12, wherein a side aperture is defined within a side portion of the inner portion, the vial being viewable through the side aperture.

15. The kit of claim 12, further comprising one or more tape panels for use in sealing the inner portion in the first shape so as to evidence tampering with the inner portion.

16. The kit of claim 12, wherein the outer portion further comprises side portions that include cutouts to ease in removal of the inner portion from the outer portion.

17. The kit of claim 16, wherein the first shape into which the inner portion is foldable comprises a top portion, a bottom portion, and first and second side portions that define a first aperture configured to receive the vial, and a top flap securable to at least one of the top portion and the first and second side portions so as to retain the vial within the first aperture, the top flap having defined therein a second aperture configured to permit access to contents of the vial without removing the vial from the inner portion.

18. The kit of claim 17, wherein the second aperture has a diameter selected to permit a top of the vial to protrude therethrough.

19. The kit of claim 12, wherein an inside of the first shape of the inner portion comprises a vial support configured to stabilize the vial within the inner portion.

20. The kit of claim 12, wherein at least one of the inner and outer portions comprises one of a tab, slot, and flap configured to interlock the first shape of the inner portion with the second shape of the outer portion so as to permit partial removal of the inner portion from the outer portion and to inhibit complete removal of the inner portion from the outer portion.

21. The kit of claim 12, wherein the inner portion is formed using a single piece of material, and wherein the outer portion is formed using a single piece of material.

22. The kit of claim 12, wherein the opening is defined by a window in the outer portion.

23. A method of packaging a vial, the method comprising:

constructing an inner portion by folding a first piece of material into a first shape configured to receive the vial therein;

disposing the vial within the first shape of the inner portion;

constructing an outer portion by folding a second piece of material into a second shape configured to removably receive the first shape of the inner portion, the outer portion defining an opening in at least the second shape; and

inserting the inner portion into the outer portion,

the inner portion having an area for receiving an identifying mark or label that is viewable via the opening when the inner and outer portions respectively are folded into the first and second shapes and the first shape is disposed within the second shape so as to form a package.

**24**. The method of claim **23**, wherein the inner portion comprises a top portion, a bottom portion, and first and second side portions that define a first aperture configured to receive the vial, and a top flap, the method comprising securing the top flap to at least one of the top portion and the first and second side portions so as to retain the vial within the first aperture, the top flap having defined therein a second aperture permitting access to contents of the vial without removing the vial from the inner portion.

**25**. The method of claim **24**, wherein the second aperture has a diameter selected to permit a top of the vial to protrude therethrough.

**26**. The method of claim **23**, further comprising disposing a cap protector over the inner portion, the cap protector comprising an indented portion sized to accommodate and protect a top of the vial.

**27**. The method of claim **23**, wherein a side aperture is defined within a side portion of the inner portion, the vial being viewable through the side aperture.

**28**. The method of claim **23**, further comprising sealing the inner portion in the first shape using one or more tape panels that evidence tampering with the inner portion.

**29**. The method of claim **23**, wherein the outer portion further comprises side portions that include cutouts to ease in removal of the inner portion from the outer portion.

**30**. The method of claim **23**, wherein an inside of the first shape of the inner portion comprises a vial support that stabilizes the vial within the inner portion.

**31**. The method of claim **23**, further comprising interlocking the first shape of the inner portion with the second shape of the outer portion with one of a tab, slot, and flap on at least one of the inner and outer portions so as to permit partial removal of the inner portion from the outer portion and to inhibit complete removal of the inner portion from the outer portion.

**32**. The method of claim **23**, wherein the inner portion is formed using a single piece of material, and wherein the outer portion is formed using a single piece of material.

**33**. The method of claim **23**, wherein the opening is defined by a window in the outer portion.

* * * * *