US009440510B2

(12) **United States Patent**
Cermak et al.

(10) **Patent No.: US 9,440,510 B2**
(45) **Date of Patent: Sep. 13, 2016**

(54) **MOBILE AIR CLEANING UNIT AND DISTRIBUTION SYSTEM**

(71) Applicant: **Thermo King Corporation**, Minneapolis, MN (US)

(72) Inventors: **Radim Cermak**, Prague (CZ); **Antonin Ryska**, Prague (CZ); **Michal Kolda**, Prague (CZ); **Marketa Kopecka**, Vsetin (CZ); **Michal Hegar**, Prague (CZ)

(73) Assignee: **THERMO KING CORPORATION**, Minneapolis, MN (US)

(*) Notice: Subject to any disclaimer, the term of this patent is extended or adjusted under 35 U.S.C. 154(b) by 363 days.

(21) Appl. No.: **13/936,816**

(22) Filed: **Jul. 8, 2013**

(65) **Prior Publication Data**

US 2013/0295832 A1 Nov. 7, 2013

Related U.S. Application Data

(63) Continuation of application No. 12/512,455, filed on Jul. 30, 2009, now Pat. No. 8,506,367.

(51) **Int. Cl.**
B60H 1/34 (2006.01)
B60H 3/00 (2006.01)
(Continued)

(52) **U.S. Cl.**
CPC ***B60H 1/00371*** (2013.01); ***B60H 3/0608*** (2013.01); ***B61D 27/00*** (2013.01); *B60H 3/0658* (2013.01); *B60H 2001/00235* (2013.01); *Y02T 30/42* (2013.01)

(58) **Field of Classification Search**
CPC B60H 1/00371; B60H 3/0608; B60H 3/0658; B60H 2001/0023
USPC 454/187, 255, 256, 258, 238, 242, 149, 454/83, 152, 136, 88, 75, 76; 62/419
See application file for complete search history.

(56) **References Cited**

U.S. PATENT DOCUMENTS

2,605,690 A 8/1952 Henney
3,102,654 A 9/1963 Millman et al.
(Continued)

FOREIGN PATENT DOCUMENTS

CN 1887610 1/2007
CN 2877875 3/2007
DE 9004809 U1 7/1990

OTHER PUBLICATIONS

Thermo King EnviroFresh Air Quality Systems for Public Transport, dated May 2005.
(Continued)

Primary Examiner — Helena Kosanovic
(74) *Attorney, Agent, or Firm* — Hamre, Schumann, Mueller & Larson, P.C.

(57) **ABSTRACT**

A mass transit vehicle includes a frame and a cabin mounted to the frame. The cabin includes a roof and a passenger zone defining a passenger zone length. An air cleaning unit includes an air cleaner housing mounted to the roof. The air cleaning unit is operable to draw in air through an inlet, through an air cleaning device, and discharge a flow of cleaned air out of an outlet. An air conditioning unit includes an air conditioner housing separate from the air cleaner housing. The air conditioning unit is operable to draw in air through an inlet, through an air conditioning device, and discharge a flow of conditioned air out of an outlet. The outlet of the air conditioning device is in communication with a duct system to direct the flow of conditioned air to the cabin substantially evenly along the passenger zone length.

12 Claims, 7 Drawing Sheets

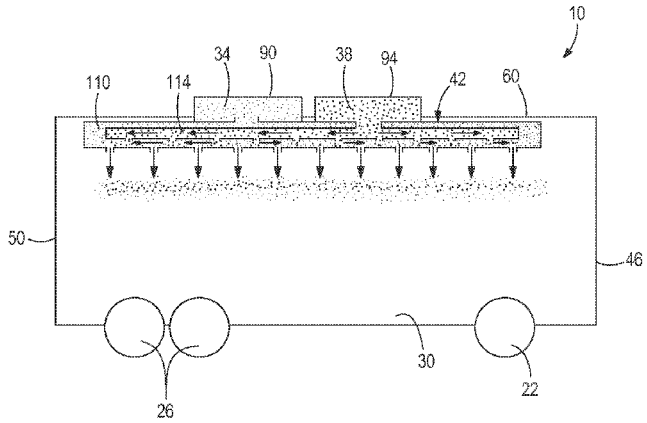

(51) **Int. Cl.**

B60H 1/00	(2006.01)
B60H 3/06	(2006.01)
B61D 27/00	(2006.01)

(56) **References Cited**

U.S. PATENT DOCUMENTS

3,291,027	A	12/1966	Beckwith	
3,397,631	A	8/1968	Simons	
3,862,549	A	1/1975	Fernandes	
5,263,897	A	11/1993	Kondo et al.	
5,358,444	A	10/1994	Helm et al.	
6,068,046	A	5/2000	Pommier et al.	
6,358,139	B1	3/2002	Renz	
6,416,116	B1 *	7/2002	Stanton	B60H 1/00371 105/461
6,632,133	B2	10/2003	Barber et al.	
6,796,132	B1	9/2004	Hille et al.	
6,835,128	B1	12/2004	Olson	
2001/0002363	A1	5/2001	Laborde et al.	
2004/0029521	A1	2/2004	Cauthorne	
2007/0032186	A1	2/2007	Clark et al.	

OTHER PUBLICATIONS

Chinese Office Action issued in corresponding Chinese Application No. 201510172342.6 dated Jul. 20, 2016 (8 pages).

* cited by examiner

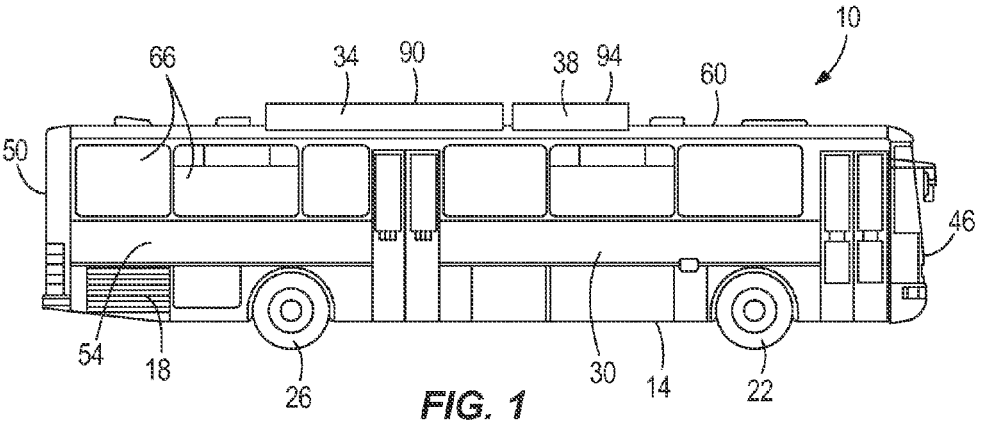
10
66
34
90
38
94
60
50
46
54
18
26
30
14
22

FIG. 1

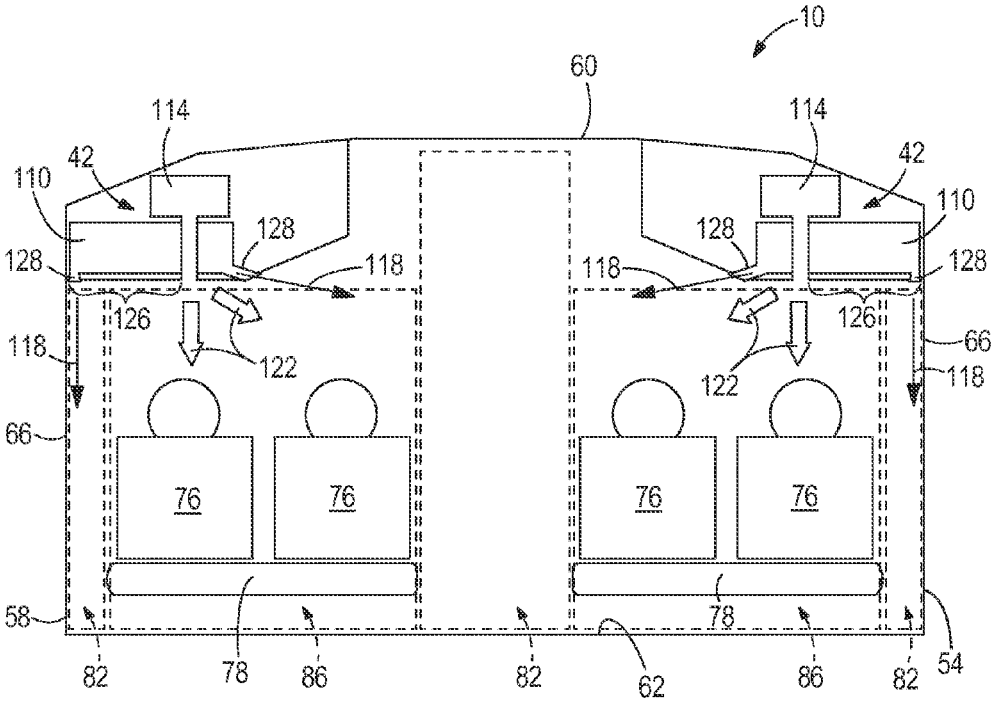
10
60
114
114
42
42
110
110
128
128
128
128
118
118
126
126
122
122
118
118
66
66
76
76
76
76
58
78
78
54
82
86
82
62
86
82

FIG. 2

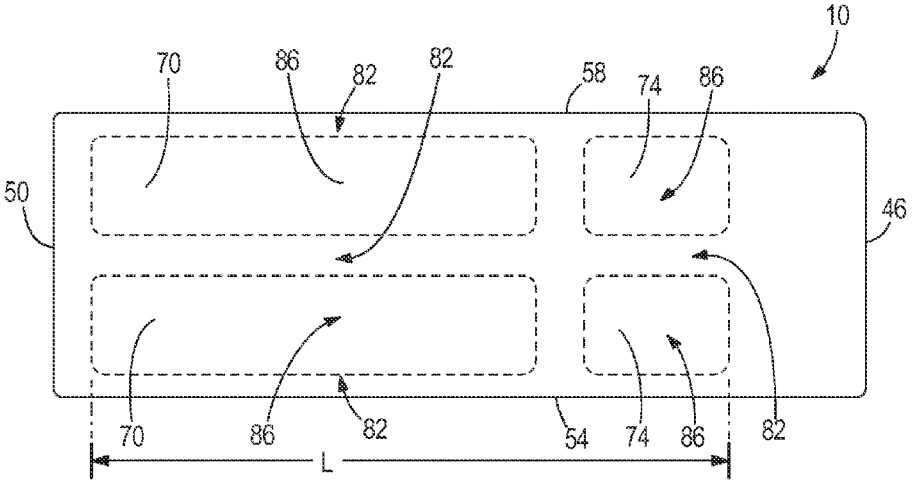
10
70
86
82
82
58
74
86
50
46
70
86
82
54
74
86
82
L

FIG. 3

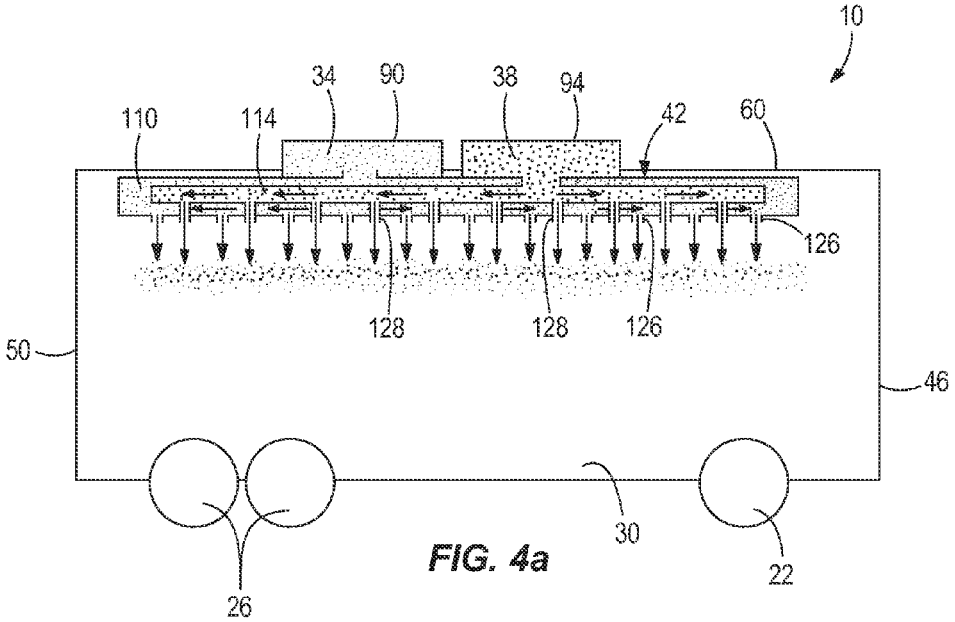
10
34
90
38
94
110
114
42
60
126
128
128
126
50
46
30
26
22

FIG. 4a

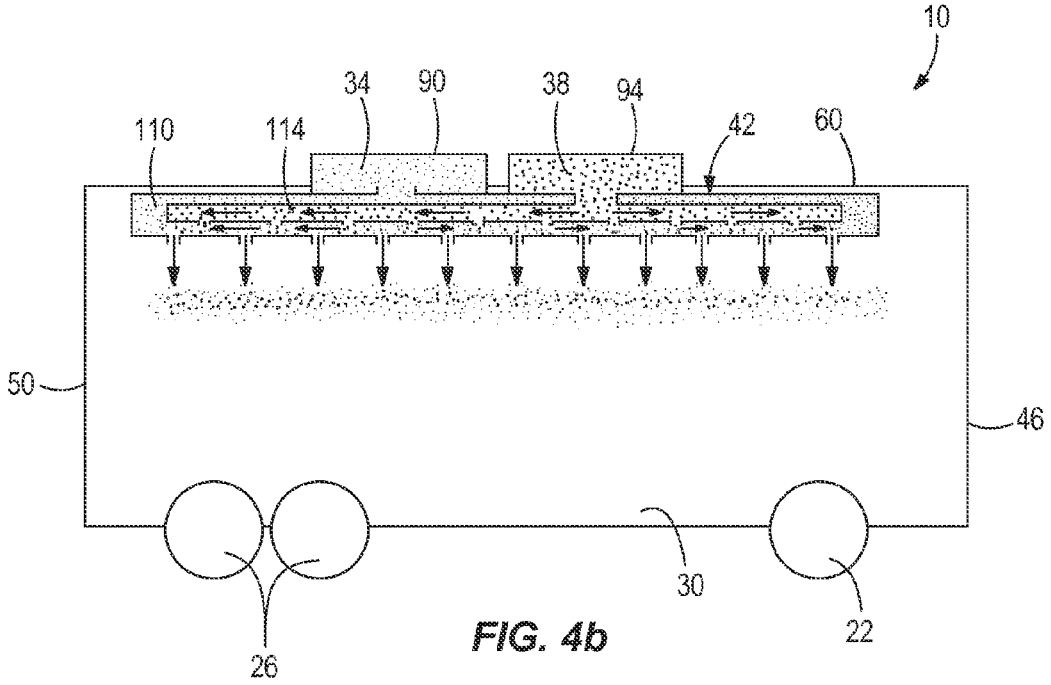

FIG. 4b

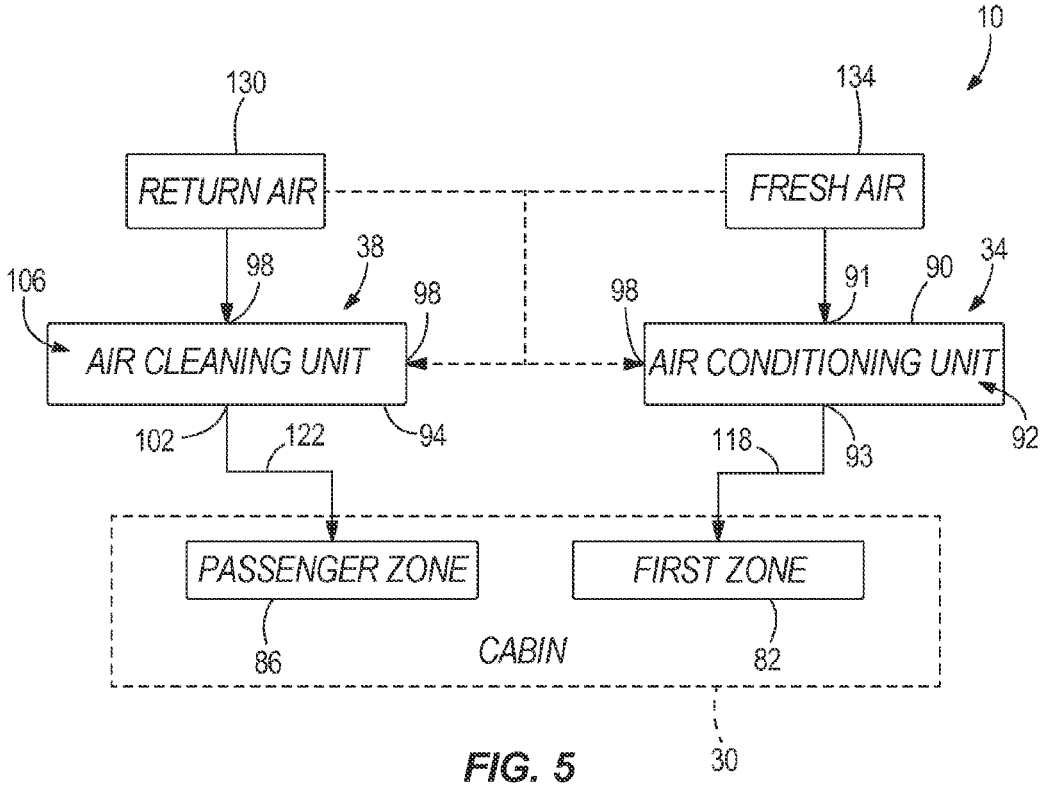
10
130
134
RETURN AIR
FRESH AIR
38
34
106
98
98
98
91
90
AIR CLEANING UNIT
AIR CONDITIONING UNIT
102
122
94
118
93
92
PASSENGER ZONE
FIRST ZONE
86
CABIN
82
30

FIG. 5

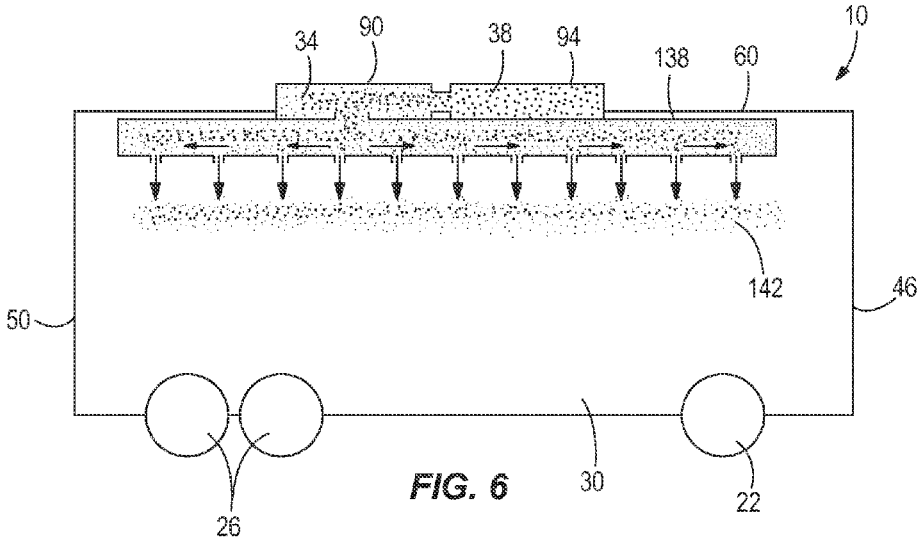
10
34
90
38
94
138
60
142
46
50
30
22
26

FIG. 6

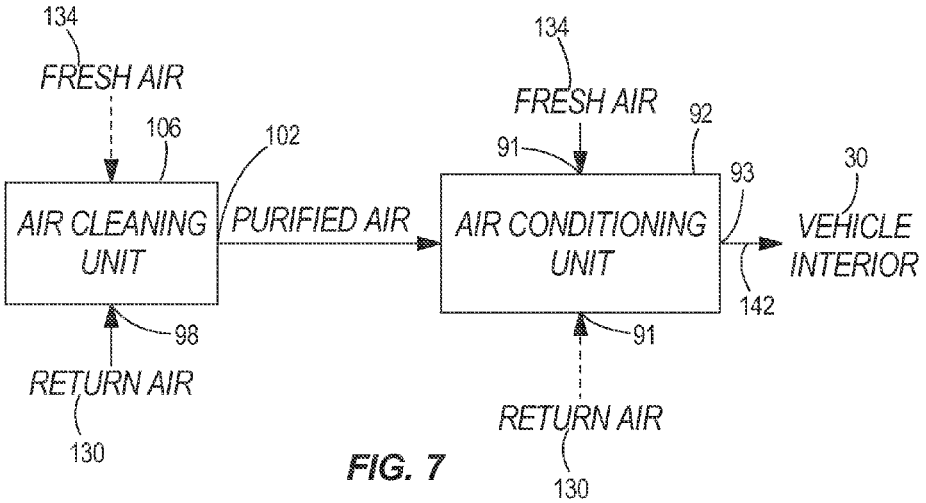
134
FRESH AIR
106
102
AIR CLEANING UNIT
PURIFIED AIR
98
RETURN AIR
130
134
FRESH AIR
91
92
AIR CONDITIONING UNIT
93
30
VEHICLE INTERIOR
142
91
RETURN AIR
130

FIG. 7

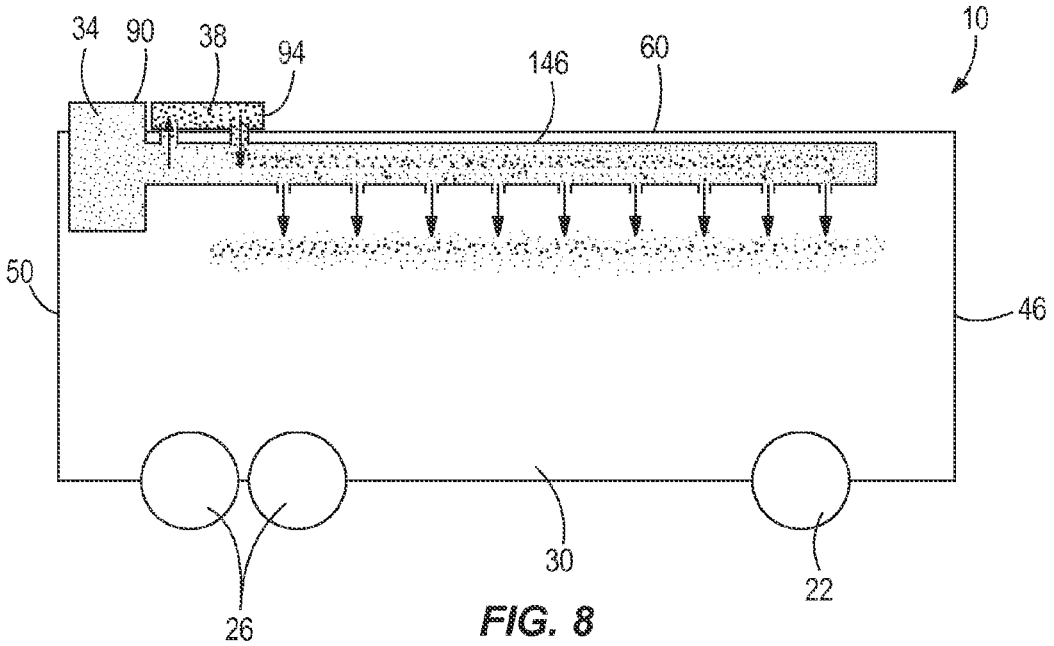
34
90
38
94
146
60
10
50
46
30
22
26

FIG. 8

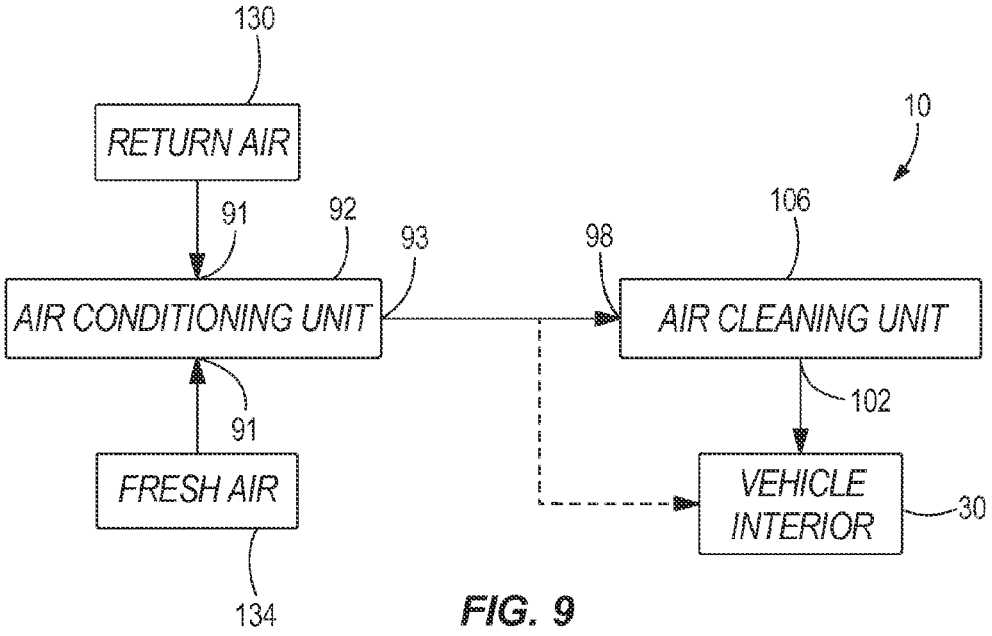
130
RETURN AIR
10
91
92
93
98
106
AIR CONDITIONING UNIT
AIR CLEANING UNIT
102
91
FRESH AIR
VEHICLE INTERIOR
30
134

FIG. 9

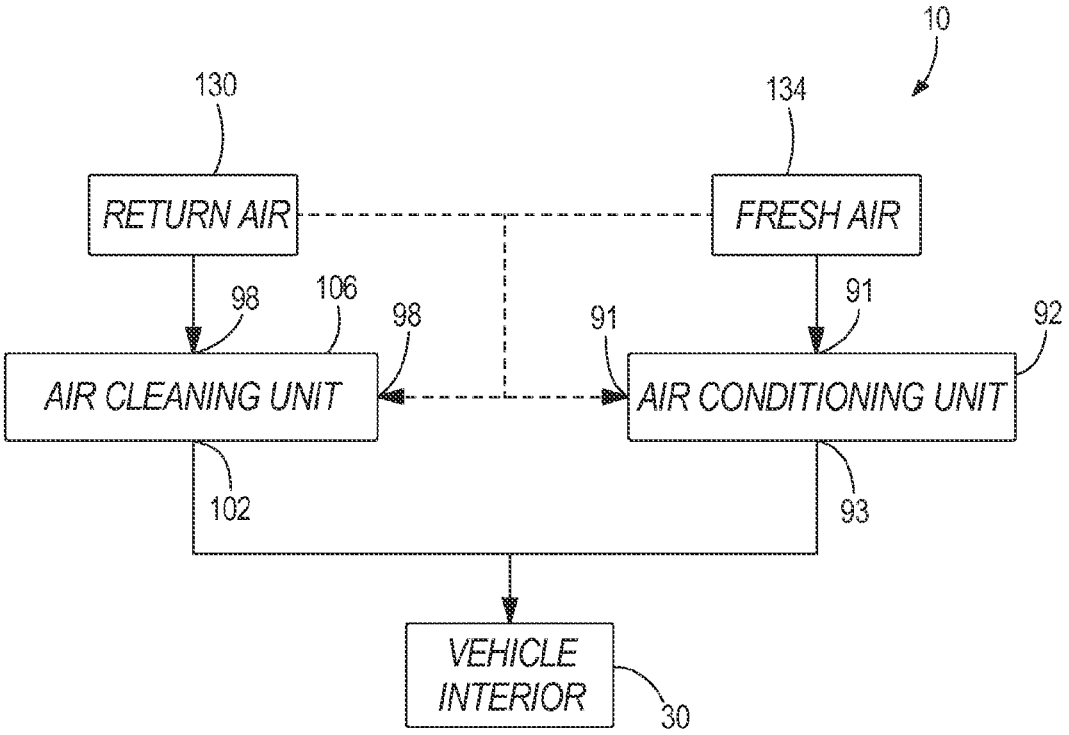
10
130
134
RETURN AIR
FRESH AIR
98
106
98
91
91
92
AIR CLEANING UNIT
AIR CONDITIONING UNIT
102
93
VEHICLE INTERIOR
30

FIG. 10

MOBILE AIR CLEANING UNIT AND DISTRIBUTION SYSTEM

BACKGROUND

The present invention relates to air cleaning units and distribution systems within passenger vehicles.

Protection of human health and environmental quality during transport in passenger vehicles are particularly important design considerations for air management and distribution for mass transit vehicles. To address these considerations, most current HVAC units for bus and rail applications include particulate air filters. However, such filters are usually of low efficiency as the units are necessarily small due to spatial constraints within the HVAC units.

SUMMARY

Typical HVAC units have a compact design that does not allow for drop-in implementation of new filtering technologies such as advanced cleaning technologies. It is predicted with a high level of confidence that the efficiency of air cleaning technologies, if placed in space available today, will not ensure sufficient (optimum, high efficiency, high quality) air cleaning. At the same time, it is not desirable to modify the layout of units (for example, make the units wider) due to cost, customer reluctance, and other reasons.

The present invention, in some constructions, addresses the concerns of the prior art by providing uniform air distribution in terms of air volume, temperature, humidity, quality, cleanliness, and other parameters. The invention can also, for example, utilize various air cleaning technologies at their desired performance efficiencies without the need to modify the size and shape of HVAC units for buses or rail vehicles. Such technologies (e.g., air purification, sanitation, disinfection, etc.) can include air filtration for both particulate and gaseous matter (e.g., activated carbon, etc.), air ionization, electrostatic precipitators, UV irradiation, photocatalytic oxidation, various ozone- and hydroxyl radicals-based methods, silver coating, and others.

In one embodiment, the invention provides a mass transit vehicle that includes a frame, a cabin, an air cleaning unit, and a duct system. The cabin is mounted to the frame and includes a roof and a passenger zone defining a passenger zone length. The air cleaning unit includes an air cleaner housing mounted to the roof, an air cleaning device disposed within the housing, an inlet upstream of the air cleaning device, and an outlet downstream of the air cleaning device. The air cleaning unit is operable to draw in air through the inlet, through the air cleaning device, and discharge a flow of cleaned air out of the outlet. The duct system is disposed within the cabin and extends substantially along the passenger zone length, and is in fluid communication with the outlet and operable to receive the flow of cleaned air from the outlet and direct the flow of cleaned air to the cabin substantially evenly along the passenger zone length.

In another embodiment the invention provides a mass transit vehicle that includes a frame. A cabin is mounted to the frame and includes a roof, a passenger zone that defines a passenger zone length, and an aisle and a window on opposite sides of a portion of the passenger zone. An air cleaning unit includes an air cleaner housing that is mounted to the roof, an air cleaning device that includes an advanced air cleaning media and is disposed within the housing, an inlet upstream of the air cleaning device, and an outlet downstream of the air cleaning device. The air cleaning unit

is operable to draw in air through the inlet, through the air cleaning device, and discharge a flow of cleaned air out of the outlet. An air conditioning unit operates independently from the air cleaning unit and includes an air conditioner housing separate from the air cleaner housing and mounted to the roof, an air conditioning device disposed within the air conditioning housing, an inlet upstream of the air conditioning device, and an outlet downstream of the air conditioning device. The air conditioning unit is operable to draw in air through the inlet, through the air conditioning device, and discharge a flow of conditioned air out of the outlet. A duct system is disposed within the cabin and includes a cleaned air duct in fluid communication with the outlet of the air cleaning unit and a conditioned air duct in communication with the outlet of the air conditioning unit. The cleaned air duct extends substantially along the passenger zone length and the conditioned air duct extends substantially along the passenger zone length. The cleaned air duct directs the flow of cleaned air to the passenger zone substantially evenly along the passenger zone length and the conditioned air duct directs the flow of conditioned air toward the aisle and the window.

In one embodiment a mass transit vehicle includes a frame and a cabin mounted to the frame. The cabin includes a roof and a passenger zone defining a passenger zone length. An air cleaning unit includes an air cleaner housing mounted to the roof, an air cleaning device disposed within the housing, an inlet upstream of the air cleaning device, and an outlet downstream of the air cleaning device. The air cleaning unit is operable to draw in air through the inlet, through the air cleaning device, and discharge a flow of cleaned air out of the outlet. A duct system is disposed within the cabin and extends substantially along the passenger zone length. The duct system is in fluid communication with the outlet and operable to receive the flow of cleaned air from the outlet and direct the flow of cleaned air to the cabin substantially evenly along the passenger zone length. An air conditioning unit includes an air conditioner housing separate from the air cleaner housing, an air conditioning device disposed within the air conditioning housing, an inlet upstream of the air conditioning device, and an outlet downstream of the air conditioning device. The air conditioning unit is operable to draw in air through the inlet, through the air conditioning device, and discharge a flow of conditioned air out of the outlet. The outlet of the air conditioning device is in communication with the duct system to direct the flow of conditioned air to the cabin substantially evenly along the passenger zone length.

In one embodiment a mass transit vehicle includes a frame and a cabin mounted to the frame. The cabin includes a roof and a passenger zone defining a passenger zone length. An air cleaning unit includes an air cleaner housing mounted to the roof, an air cleaning device disposed within the housing, an inlet upstream of the air cleaning device, and an outlet downstream of the air cleaning device. The air cleaning unit is operable to draw in air through the inlet, through the air cleaning device, and discharge a flow of cleaned air out of the outlet. A duct system is disposed within the cabin and extends substantially along the passenger zone length. The duct system is in fluid communication with the outlet and is operable to receive the flow of cleaned air from the outlet and direct the flow of cleaned air to the cabin substantially evenly along the passenger zone length. An air conditioning unit includes an air conditioner housing separate from the air cleaner housing, an air conditioning device disposed within the air conditioning housing, an inlet upstream of the air conditioning device, and an outlet

downstream of the air conditioning device. The air conditioning unit is operable to draw in air through the inlet, through the air conditioning device, and discharge a flow of conditioned air out of the outlet. The outlet is in communication with the duct system to direct the flow of conditioned air to the cabin substantially evenly along the passenger zone length. The inlet of the air conditioning unit is configured to receive air returned from the cabin, air from the exterior of the cabin, and air from the air cleaning unit. The inlet of the air cleaning unit is configured to receive air returned from the cabin, air from the exterior of the cabin, and air from the air conditioning unit.

Other aspects of the invention will become apparent by consideration of the detailed description and accompanying drawings.

BRIEF DESCRIPTION OF THE DRAWINGS

FIG. **1** is a side view of a bus.

FIG. **2** is a schematic view of the inside of the bus of FIG. **1**.

FIG. **3** is a schematic top view of the inside of the bus of FIG. **1**.

FIG. **4***a* is a schematic side view of the bus of FIG. **1**.

FIG. **4***b* is a schematic side view of the bus of FIG. **1** with an alternative air distribution.

FIG. **5** is a schematic view of an air conditioning unit and an air cleaning unit of bus of FIG. **1**.

FIG. **6** is a schematic side view of a bus according to another embodiment of the invention.

FIG. **7** is a schematic view of an air conditioning unit and an air cleaning unit of the bus of FIG. **6**.

FIG. **8** is a schematic side view of a bus according to another embodiment of the invention.

FIG. **9** is a schematic view of an air conditioning unit and an air cleaning unit of the bus of FIG. **8**.

FIG. **10** is a schematic view of an air conditioning unit and an air cleaning unit of the bus of FIG. **8**.

DETAILED DESCRIPTION

Before any embodiments of the invention are explained in detail, it is to be understood that the invention is not limited in its application to the details of construction and the arrangement of components set forth in the following description or illustrated in the following drawings. The invention is capable of other embodiments and of being practiced or of being carried out in various ways. Also, it is to be understood that the phraseology and terminology used herein is for the purpose of description and should not be regarded as limiting. The use of "including," "comprising," or "having" and variations thereof herein is meant to encompass the items listed thereafter and equivalents thereof as well as additional items. Unless specified or limited otherwise, the terms "mounted," "connected," "supported," and "coupled" and variations thereof are used broadly and encompass both direct and indirect mountings, connections, supports, and couplings. Further, "connected" and "coupled" are not restricted to physical or mechanical connections or couplings.

FIG. **1** illustrates a mass transit passenger vehicle in the form of a bus **10**. The bus **10** includes a frame **14**, an engine (not shown) supported by the frame **14** in an engine compartment **18**, front wheels **22** and rear wheels **26** that support the bus **10** for movement over the ground, a cabin **30** mounted to the frame **14**, an air conditioning unit **34**, an air cleaning unit **38**, and a duct system **42** (see FIGS. **2** and **4***a*). The cabin **30** has a front **46**, a back **50**, a right side **54** (visible in FIG. **1**), and a left side **58** (see FIG. **2**), and a roof **60**. The left and right sides **54**, **58** include windows **66**. In other embodiments, the vehicle may be another passenger vehicle such as a train passenger car.

With reference to FIGS. **1**-**3**, the illustrated cabin **30** defines a typical bus interior with an aisle **62**, a seating area **70** (see FIG. **3**), and a disabled/standing area **74** (see FIG. **3**) near the front **46** of the cabin **30**. The aisle **62** extends from the front **46** of the cabin **30** to the back **50** of the cabin **30** so passengers **76** may walk between the front **46** and back **50** of the cabin **30**. The windows **66** are positioned on the sides of the bus **10** so passengers **76** may look outside the bus **10** from the seating area **70** and the disabled/standing area **74**.

As best shown in FIG. **2**, the illustrated seating area **70** is arranged with two rows of benches **78**. Each bench **78** holds two passengers **76**. The two rows are positioned adjacent the sides **54**, **58** of the cabin **30** next to the windows **66** such that the aisle **62** is positioned between the two rows. Other embodiments are contemplated wherein the bus **10** may have a different arrangement, as desired. For example, the benches **78** may be individual seats or there may not be a standing area **74**. In other embodiments, the benches **78** may be aligned in banks running from the front **46** to the back **50** of the cabin **30**. The particular arrangements of the benches **78** is not limiting to the invention and may be arranged as desired.

With reference to FIG. **3**, the aisle **62** and windows **66** in combination define a first zone **82** that extends the full length of the cabin **30**. In the illustrated embodiment, the first zone **82** is located between the two seating areas **70** and outboard of the two seating areas **70**.

The seating area **70** and the disabled/standing area **74** defines a passenger zone **86** and a passenger zone length L where passengers **76** will be located during transit of the bus **10**. The passengers **76** will be located in the passenger zone **86** for the majority of the time spent on the bus **10**. Therefore, the majority of the air consumed will be consumed by passengers **76** within the passenger zone **86**. In other embodiments, the bus **10** may be different and the first zone **82** and the passenger zone **86** may be arranged differently, as desired. In the illustrated embodiment, the first zone **82** flanks each passenger zone **86**.

Referring to FIGS. **4***a*, **4***b*, and **5**, the air conditioning unit **34** has an independent air conditioning housing **90** and in the illustrated embodiment is mounted on the roof **60** of the bus **10**. With reference to FIG. **5**, the air conditioning unit **34** includes an inlet **91**, a conditioning zone **92** that may include a compressor, a condenser, an expansion valve, an evaporator, and an air mixing chamber (none shown), and an outlet **93** all housed within the air conditioning housing **90**. Additionally, the air conditioning unit **34** may include other components, such as dryers, economizers, controllers, prime movers, and other components, as desired.

The air cleaning unit **38** has an independent air cleaning housing **94** that is separate from the air conditioning housing **90** and in the illustrated embodiment is mounted on the roof **60**. The air cleaning unit **38** is independent from the air conditioning unit **34** in form and function. The air cleaning housing **94** is separate from the air conditioning housing **90** and the air cleaning unit **38** may operate independently with separate controls or even without an air conditioning unit **34** employed on the bus **10**. For example, in temperate climates the air conditioning unit **34** may be removed and the air cleaning unit **38** allowed to operate individually to maintain the desired environment within the cabin **30**.

The air cleaning unit **38** includes an inlet **98**, an outlet **102**, and air cleaning media **106**. Supply air flows into the inlet **98**, through the air cleaning media **106**, and out the outlet **102**. The air cleaning media **106** includes one or more air cleaning technologies and is housed within the air cleaning housing **94**.

In the embodiment shown in FIGS. **2**, **4***a*, **4***b*, and **5**, the duct system **42** includes a conditioned air duct **110** and a cleaned air duct **114**. The conditioned air duct **110** is separate from the cleaned air duct **114** such that a conditioned air flow path **118** is separate from a cleaned air flow path **122**.

With specific reference to FIG. **2**, the cleaned air duct **114** directs air from the air cleaning unit **38** to the passenger zone **86** such that passengers **76** consume cleaned air. The illustrated cleaned air duct **114** includes clean air vents **126** that direct the cleaned air flow path **122** toward the passengers **76**. In one embodiment, the passengers **76** may manipulate the clean air vents **126** such that the cleaned air flow path **122** is directed as desired. In other embodiments, the direction of the cleaned air flow path **122** may be predetermined.

With continued reference to FIG. **2**, the conditioned air duct **110** directs air from the air conditioning unit **34** to the first zone **82** such that a desirable temperature is maintained within the cabin **30**. In the embodiment illustrated in FIGS. **2**, **4***a* and **5**, conditioned air vents **128** direct the conditioned air away from the passenger zone **86**. As such, the air within the passenger zone **86** is composed of a relatively large portion of cleaned air. The conditioned air flow path **118** is directed into the first zone **82** and allowed to diffuse into the remaining zones of the cabin **30**. In this way, the temperature of the cabin **30** is maintained while providing passengers **76** with a large portion of cleaned air.

FIG. **4***a* shows the cleaned air duct **114** extending substantially from the front **46** to the back **50** of the cabin **30**, such that the cleaned air flow path **122** is delivered to the passenger zone **86**. Likewise, the conditioned air duct **110** extends substantially from the front **46** to the back **50** of the cabin **30**, such that the temperature of the bus **10** is maintained substantially constant from the front **46** to the back **50** of the cabin **30**.

With reference to FIG. **5**, the air conditioning unit **34** and the air cleaning unit **38** have two sources of supply air. Return air **130** is air collected from the interior of the cabin **30** and is rerouted into the air conditioning unit **34** or the air cleaning unit **38** to be reconditioned or cleaned, respectively. Fresh air **134** is collected from the exterior of the bus **10** and conditioned or cleaned before being delivered to the passengers **76**. In the illustrated embodiment, both the air conditioning unit **34** and the air cleaning unit **38** receive a mixture of fresh air **134** and return air **130**. Both the air conditioning unit **34** and the air cleaning unit **38** include a selector device (not shown) that collects the desired ratio of return air **130** and fresh air **134** to be conditioned and cleaned. In other embodiments, the air cleaning unit **38** receives all return air **130**, a mix of return air **130** and fresh air **134**, or all fresh air **134**, and the air conditioning unit **34** receives all return air **130**, a mix of return air **130** and fresh air **134**, or all fresh air **134**. Additionally, a portion of the cleaned air may pass to the air conditioning unit **34** or the conditioned air may pass to the air cleaning unit **38**.

From the air cleaning unit **38**, the cleaned air flow path **122** is delivered via the cleaned air duct **114** to the passenger zone **86**. The conditioned air flow path **118** is delivered by the conditioned air duct **110** from the air conditioning unit **34** to the first zone **82**. In the illustrated embodiment, the cleaned air flow path **122** and the conditioned airflow path **118** are mixed within the cabin **30** after exiting the duct system **42** (see, e.g., FIG. **4***a*). In other embodiments, the cleaned air flow path **122** and the conditioned air flow path **118** may mix in the duct system **42** after exiting the cleaned air duct **114** and/or the conditioned air duct **110**, respectively, before being discharged substantially uniformly to the first zone **82** and/or the passenger zone **86**. For example, the cleaned air duct **114** could be contained within the conditioned air duct such that the cleaned air flow path **122** exits the cleaned air duct **114** into the conditioned air duct prior to being discharged substantially uniformly into the first zone **82** and/or the passenger zone **86** (see, e.g., FIG. **4***b*).

Another embodiment of the invention will be described with respect to FIGS. **6** and **7**. In this embodiment, a common duct **138** receives the cleaned air and the conditioned air and distributes a mixed air flow **142** along the length of the cabin **30**. With reference to FIG. **7**, multiple alternative arrangements may be used when operating the air cleaning unit **38** and the air conditioning unit **34**. In one embodiment, shown in solid lines, the air cleaning unit **38** receives return air **130** and cleans it with any of the methods mentioned above. The cleaned air is then directed to the air conditioning unit **34**. The air conditioning unit **34** receives the cleaned air from the air cleaning unit **38** and the fresh air **134**. The air conditioning unit **34** then mixes and conditions the air and passes the cleaned and conditioned air to the cabin **30** via the common duct **138**.

In another embodiment, shown in broken lines, the air cleaning unit receives fresh air **134** and cleans it with any of the methods mentioned above. The cleaned air is then directed to the air conditioning unit **34**. The air conditioning unit **34** receives the cleaned air from the air cleaning unit **38** and the return air **130**. The air conditioning unit **34** then mixes and conditions the air and passes the cleaned and conditioned air to the cabin **30** via the common duct **138**.

In yet another embodiment, the air conditioning unit **34** and the air cleaning unit **38** receive both fresh air **134** and return air **130** (i.e., the units **34**, **38** receive the air shown in both the solid and broken lines in FIG. **7**). Other arrangements may exist and may be implemented as desired. The different arrangements each offer different advantages and may be more or less desirable depending on the operating environment. For example, the embodiment shown in solid lines may be preferred in suburban or rural areas, where indoor pollution sources contribute most to the interior pollution (fresh air **134** is already substantially clean and it does not have to be purified). The embodiment, shown in broken lines may be preferred in polluted urban, industrial, or for example dusty desert areas, where outdoor air is substantially more polluted than the return air **130**. One reason for selectively treating one or the other air-stream (i.e., cleaned air **134** and return air **130**) is to more efficiently design and size of the air conditioning unit **34** and the air cleaning unit **38** (e.g., the smaller amount of air that is treated, the smaller the units **34**, **38** may be or the same sized units **34**, **38** may run at a higher efficiency).

Another embodiment of the invention will be described with respect to FIGS. **8** and **9**. In this embodiment, the air conditioning unit **34** receives return air **130** and fresh air **134**, conditions the air, and supplies the conditioned air to a common duct **146**. In this embodiment, the air cleaning unit **38** draws conditioned air out of the common duct **146** and cleans the conditioned air. The conditioned and cleaned air is then returned to the common duct **146** and distributed throughout the length of the cabin **30**. A portion of the conditioned air is not drawn into the air cleaning unit **38** but instead is delivered directly into the cabin **30** via the common duct **146**. In an alternate embodiment, the air

cleaning unit **38** is not bypassed, but cleans substantially all the air provided to the cabin **30**.

In the illustrated embodiment, the air cleaning unit **38** and the air conditioning unit **34** are located adjacent to one another and both are positioned substantially near the rear **50** of the bus **10** and the end portion of the duct system **42**. This arrangement provides for even distribution and sufficient mixing of the cleaned air flow path **122** and the conditioned air flow path **118**. In other embodiments, the air cleaning unit **38** and the air conditioning unit **34** may be positioned differently (e.g., at the front **46** of the bus **10**) such that the cleaned air flow path **122** and the conditioned air flow path **118** are evenly distributed and sufficiently mixed.

In another embodiment, illustrated in FIG. **10**, the air cleaning unit **38** may receive fresh air **134**, return air **130**, and or conditioned air before cleaning the air and returning the air to the common duct **146**. The air cleaning unit **38** and the air conditioning unit **34** operate independently but the conditioned air flow and the cleaned air flow may mix before entering the cabin **30**. This arrangement is similar to that described with respect to FIGS. **1-5** but without the separate conditioned air duct **110** and cleaned air duct **114**. This may be advantageous due to space limitations, cost, or other reasons. In yet another arrangement, all the conditioned air may pass through the air cleaning unit **38** before entering the cabin **30**.

In one embodiment, the air cleaning media **106** is an advanced air cleaning media. For purposes of this invention, advanced air cleaning media includes air ionization, electrostatic precipitators, UV irradiation, photocatalytic oxidation, various ozone- and hydroxyl radical-based methods, silver coating, as well as any other media that requires a technology beyond a simple particulate filter. Additionally, the air cleaned by the air cleaning unit **38** may include beneficial additives such as charged ions or other additives that have the ability to further clean downstream air and components (e.g., the duct system **42** and/or the air conditioning unit **34**).

To this point, existing air cleaning technologies have not provided advanced cleaning media and techniques for passenger vehicles. Such cleaning media will improve the quality of air consumed by passengers **76** on such vehicles. In addition, the invention provides a delivery system that delivers the cleaned air to the passengers **76** throughout the cabin **30**. The invention provides a better air cleaning and delivery system that may be utilized with or without the air conditioning unit **34**.

The air cleaning unit **38** is separate and independent from the air conditioning unit **34** for several reasons. For example, a separate air cleaning unit **38** may be used for a bus **10** in a temperate climate that does not require air conditioning to maintain an acceptable temperature within the cabin **30**. Additionally, the air cleaning unit **38** may be added to existing vehicles that already have an air conditioning unit **34** but no air cleaning system. The air cleaning unit **38** and the air conditioning unit **34** cooperate to maintain a satisfactory atmosphere within the cabin **30**. This may be especially useful in urban environments where population concentration is large and concerns about air pollution are present. The invention may be added to existing vehicles to improve the air quality consumed by passengers **76** riding within the passenger zone **86**.

The invention provides, among other things, an independently operating air cleaning unit **38** with an independent air cleaning housing **94**. The air cleaning unit **38** includes an inlet **98**, an air cleaning media **106** that may be multiple physical and chemical cleaning media for both particulate and gaseous pollution, and an outlet **102**. The outlet **102** exhausts to a ducting system that extends substantially from the front **46** of the bus **10** to the rear of the bus **10** and is configured to deliver the cleaned air that has passed through the cleaning media to the passenger zone **86**.

The above embodiments describe a system with an air cleaning unit **38** independent from an air conditioning unit **34**. In one embodiment, the air cleaning unit **38** includes an independent air cleaner housing **94** and the air conditioning unit **34** includes an independent air conditioning housing **90**. While the housings **90**, **94** are independent, the air cleaning unit **38** and the air conditioning unit **34** may be controlled by a common controller, such that the atmosphere within the cabin **30** is controlled by a single controller.

In the case where a single controller controls both the air cleaning unit **38** and the air conditioning unit **34**, the units **34**, **38** may be controlled independent from one another or may be controlled by a common algorithm or program to interact with one another to maintain a desired atmosphere within the cabin **30**. In other words, the air cleaning unit **38** and the air conditioning unit **34** may be physically independent but may include a shared control system.

In another embodiment, a shell (not shown) my be installed to cover the air conditioning unit **34** and the air cleaning unit **38** such that an onlooker would see only a single unit on the vehicle **10**. The air conditioning housing **90** and the air cleaning housing **94** are still separate, but a single shell covers both housings **90**, **94** to provide a desired appearance while maintaining the advantages of the separate housings **90**, **94**. In yet another embodiment, the air cleaning unit **38** and the air conditioning unit **34** could be mounted to the shell thereby eliminating the separate air cleaning housing **94** and the air conditioning housing **90** while maintaining the air cleaning unit **38** separate and independent from the air conditioning unit **34**.

In one embodiment, the cleaned air is directed toward the passenger zone **86** such that substantially all the cleaned air passes into and through the passenger zone **86** before diffusing into the rest of the cabin **30**.

The invention also provides an independent air conditioning unit **34** that includes an inlet **91**, a conditioning zone **92** with a compressor, a condenser, and an evaporator, and an outlet **93**. The air conditioning unit **34** is operable to affect the temperature of the air within the cabin **30**. The air conditioning unit **34** may also perform other functions such as dehumidifying the cabin **30**. In one embodiment, the air conditioner is in communication with the duct system **42** such that conditioned air is directed toward the first zone **82** such that substantially all the conditioned air passes into and through the first zone **82** before diffusing into the rest of the cabin **30**.

Various features and advantages of the invention are set forth in the following claims.

What is claimed is:

1. A mass transit vehicle comprising:

a frame;

a cabin mounted to the frame, the cabin including a roof and a passenger zone defining a passenger zone length;

an air cleaning unit including an air cleaner housing mounted to the roof, an air cleaning device disposed within the air cleaner housing, an air-cleaner housing inlet upstream of the air cleaning device, and an air-cleaner housing outlet downstream of the air cleaning device, the air cleaning unit operable to draw in air through the air-cleaner housing inlet, through the air cleaning device, and discharge a flow of cleaned air out of the air-cleaner housing outlet;

a duct system disposed within the cabin and extending substantially along the passenger zone length, the duct system having an clean air duct in fluid communication with the air-cleaner housing outlet and operable to receive the flow of cleaned air from the air-cleaner housing outlet and direct the flow of cleaned air to the cabin substantially evenly along the passenger zone length; and

an air conditioning unit including an air conditioner housing separate from the air cleaner housing, an air conditioning device disposed within the air conditioning housing, an air-conditioning inlet upstream of the air conditioning device, and an air-conditioning outlet downstream of the air conditioning device, the air conditioning unit operable to draw in air through the air-conditioning inlet, through the air conditioning device, and discharge a flow of conditioned air out of the air-conditioning outlet, wherein the air-conditioning outlet of the air conditioning device is in communication with air-conditioning duct of the duct system to direct the flow of conditioned air to the cabin substantially evenly along the passenger zone length,

wherein the clean-air duct is disposed within the air-conditioning duct and configured to discharge the flow of cleaned air inside the air-conditioning duct

wherein the flow of conditioned air and the flow of cleaned air are mixed within the duct system.

2. The mass transit vehicle of claim **1**, wherein the air cleaning device includes an advanced air cleaning media.

3. The mass transit vehicle of claim **1**, wherein the duct system is configured to direct the flow of cleaned air directly to the passenger zone.

4. The mass transit vehicle of claim **1**, wherein the air conditioning unit is mounted to the roof.

5. The mass transit vehicle of claim **1**, wherein the air conditioning unit is operable independently of the air cleaning unit.

6. The mass transit vehicle of claim **1**, wherein the duct system includes the clean air duct extending substantially along the passenger zone length and the air-conditioning duct extending substantially along the passenger zone length, the air-conditioning duct configured to convey the conditioned air separate from the conveyance of the cleaned air through the clean-air duct.

7. The mass transit vehicle of claim **6**, wherein the cabin includes an aisle and a window on opposite sides of a portion of the passenger zone, and wherein the conditioned air duct is configured to direct the flow of conditioned air toward the aisle and the window.

8. The mass transit vehicle of claim **1**, wherein the passenger zone includes passenger seating and designated areas for wheelchairs to be stationed during movement of the mass transit vehicle.

9. The mass transit vehicle of claim **8**, wherein the duct system is configured to direct the flow of conditioned air from the air conditioning unit outside of the passenger zone.

10. The mass transit vehicle of claim **9**, wherein the duct system includes a cleaned air duct that extends substantially along the passenger zone length and directs the flow of cleaned air, and a conditioned air duct that extends substantially along the passenger zone length and directs the flow of conditioned air separately from the flow of cleaned air.

11. The mass transit vehicle of claim **1**, wherein the ducting system includes a vent visible from the interior of the cabin, the vent providing communication between the duct system and the interior of the cabin.

12. A mass transit vehicle comprising:

a frame;

a cabin mounted to the frame, the cabin including a roof and a passenger zone defining a passenger zone length;

an air cleaning unit including an air cleaner housing mounted to the roof, an air cleaning device disposed within the air cleaner housing, an air cleaner inlet upstream of the air cleaning device, and an air cleaner outlet downstream of the air cleaning device, the air cleaning unit operable to draw in air through the air cleaner inlet, through the air cleaning device, and discharge a flow of cleaned air out of the air cleaner outlet;

a duct system disposed within the cabin and extending substantially along the passenger zone length, the duct system in fluid communication with the air cleaner outlet and operable to receive the flow of cleaned air from the air cleaner outlet and direct the flow of cleaned air to the cabin substantially evenly along the passenger zone length; and

an air conditioning unit including an air conditioner housing separate from the air cleaner housing, an air conditioning device disposed within the air conditioning housing, an air conditioning inlet upstream of the air conditioning device, and an air conditioning outlet downstream of the air conditioning device, the air conditioning unit operable to draw in air through the air conditioning inlet, through the air conditioning device, and discharge a flow of conditioned air out of the air conditioning outlet, wherein the air conditioning outlet of the air conditioning device is in communication with the duct system to direct the flow of conditioned air to the cabin substantially evenly along the passenger zone length,

wherein the duct system includes a cleaned air duct extending substantially along the passenger zone length and a conditioned air duct extending substantially along the passenger zone length, the conditioned air duct configured to convey the conditioned air separate from the conveyance of the cleaned air through the cleaned air duct, and

wherein the cleaned air duct is disposed within the conditioned air duct and configured to discharge the flow of cleaned air inside the conditioned air duct.

* * * * *