US009339810B2

(12) **United States Patent**
Butz et al.

(10) **Patent No.: US 9,339,810 B2**
(45) **Date of Patent: *May 17, 2016**

(54) **MULTI-CHANNEL PIPETTOR WITH REPOSITIONABLE TIPS**

(71) Applicant: **Integra Biosciences AG**, Zizers (CH)

(72) Inventors: **David Earl Butz**, Groton, MA (US); **Gregory Mathus**, Concord, MA (US); **Richard Cote**, Bolton, MA (US); **George P. Kalmakis**, Gloucester, MA (US)

(73) Assignee: **Integra Biosciences AG** (CH)

(*) Notice: Subject to any disclaimer, the term of this patent is extended or adjusted under 35 U.S.C. 154(b) by 0 days.

This patent is subject to a terminal disclaimer.

(21) Appl. No.: **13/952,726**

(22) Filed: **Jul. 29, 2013**

(65) **Prior Publication Data**

US 2015/0030513 A1 Jan. 29, 2015

Related U.S. Application Data

(60) Continuation of application No. 13/411,675, filed on Mar. 5, 2012, now Pat. No. 8,518,345, which is a continuation of application No. 13/219,823, filed on Aug. 29, 2011, now Pat. No. 8,128,892, which is a division of application No. 12/115,005, filed on May 5, 2008, now Pat. No. 8,029,742.

(51) **Int. Cl.**
B01L 3/02 (2006.01)

(52) **U.S. Cl.**
CPC ***B01L 3/0237*** (2013.01); ***B01L 3/0227*** (2013.01); *B01L 2200/022* (2013.01); *B01L 2300/0829* (2013.01)

(58) **Field of Classification Search**
CPC B01L 3/02; B01L 3/021; B01L 3/0227; B01L 3/0231; B01L 3/0237; B01L 2200/021; B01L 2200/022
USPC 422/501, 509; 73/864.01–864.25
See application file for complete search history.

(56) **References Cited**

U.S. PATENT DOCUMENTS

662,087	A	11/1900	Nichols et al.
4,226,136	A	10/1980	Porter et al.
4,830,832	A	5/1989	Arpagaus et al.
5,057,281	A	10/1991	Torti et al.
5,061,449	A	10/1991	Torti et al.
6,235,244	B1	5/2001	Allen et al.
6,415,669	B1	7/2002	Carl

(Continued)

FOREIGN PATENT DOCUMENTS

EP	0855033	1/2002
EP	1739434	1/2007
FR	2739935	9/2009

Primary Examiner — Jan Ludlow
(74) *Attorney, Agent, or Firm* — Andrus Intellectual Property Law, LLP

(57) **ABSTRACT**

A hand-held, multi-channel pipettor has an electronically controlled motor to reposition pipette tips for different center to center spacing. Each repositionable tip fitting assembly has a cam following pin that is driven by cam tracks in a motor driven roller drum. Stationary ports for the multiple aspiration cylinders are strategically placed to simplify management of flexible tubes leading to the repositionable pipette tip fitting assemblies. The pipettor has a user interface that can be operated conveniently by one hand to reposition pipette tips. It has a pipette tip ejection mechanism with a sinusoidal stripper bar.

9 Claims, 14 Drawing Sheets

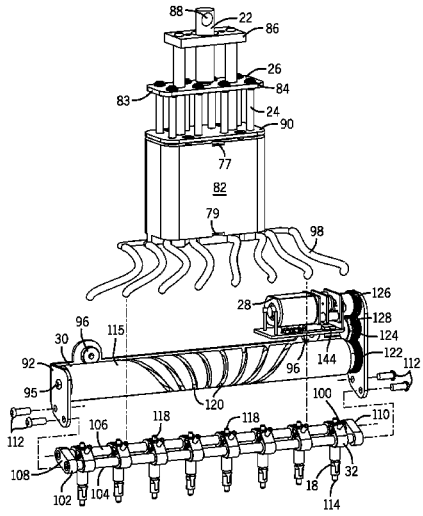

(56) **References Cited**

U.S. PATENT DOCUMENTS

8,128,892	B2 *	3/2012	Butz et al.	422/501
8,518,345	B2 *	8/2013	Butz et al.	422/501
2001/0036425	A1	11/2001	Gazeau et al.	
2002/0020233	A1	2/2002	Baba et al.	
2004/0099067	A1	5/2004	Chen et al.	
2007/0003445	A1	1/2007	Belgardt et al.	
2009/0104079	A1	4/2009	O'Connell et al.	

* cited by examiner

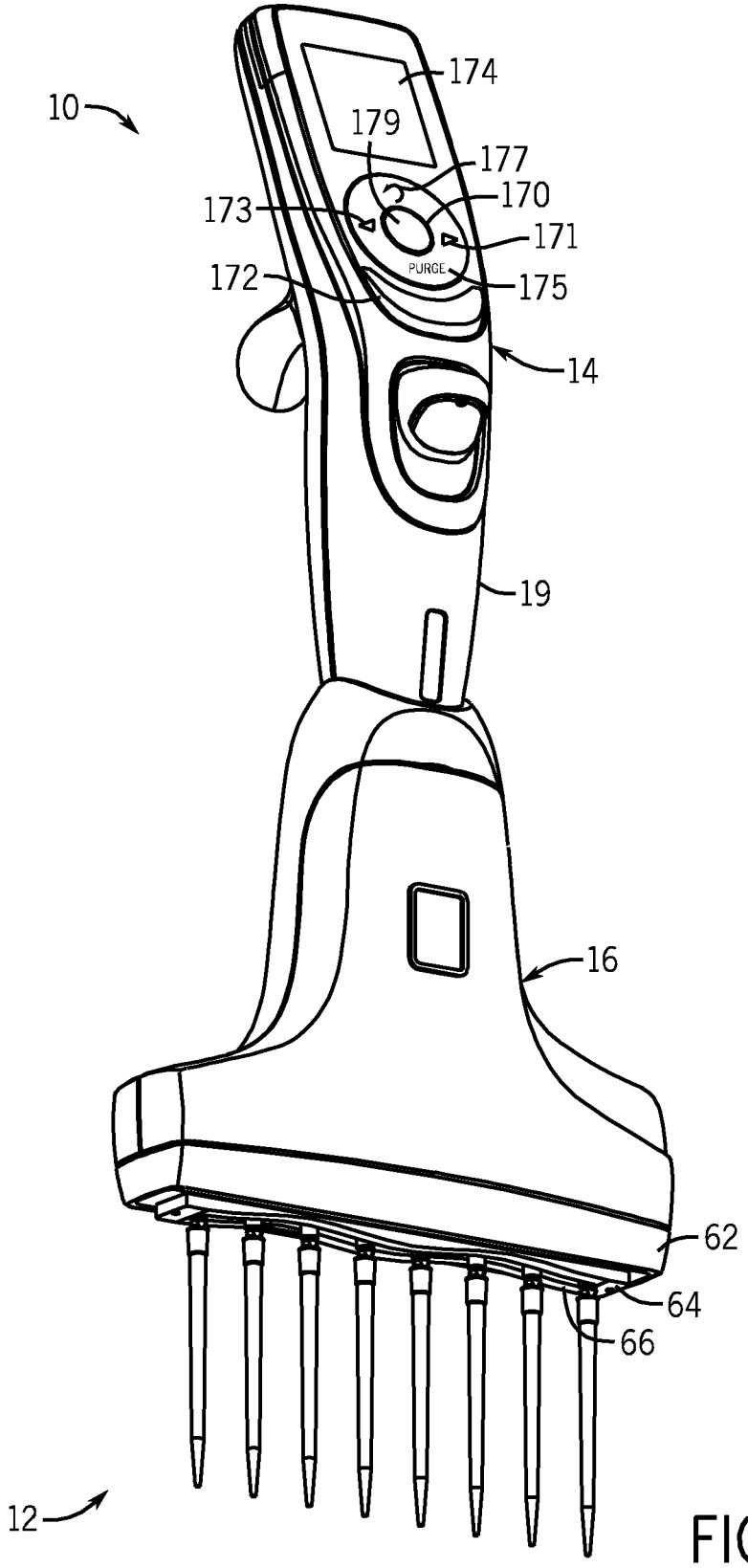

FIG. 1

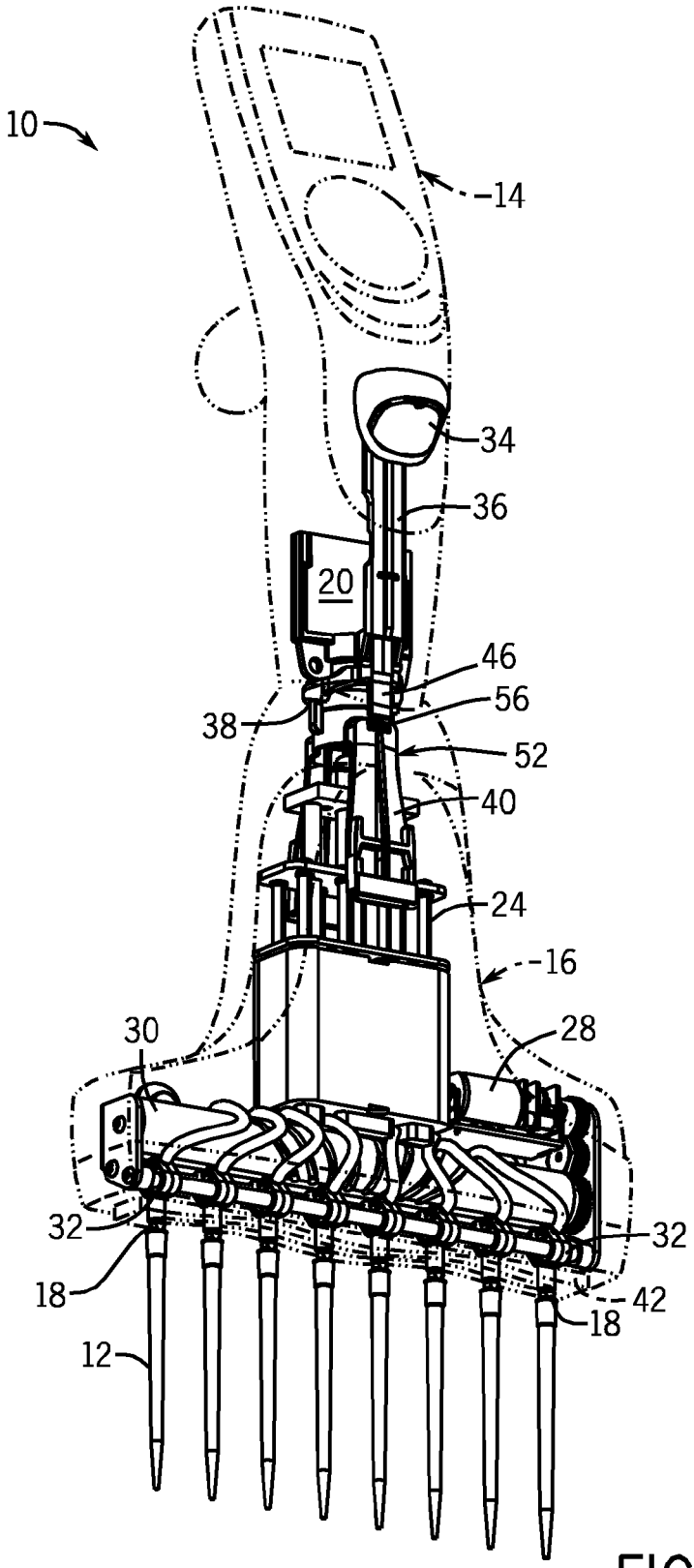

FIG. 2

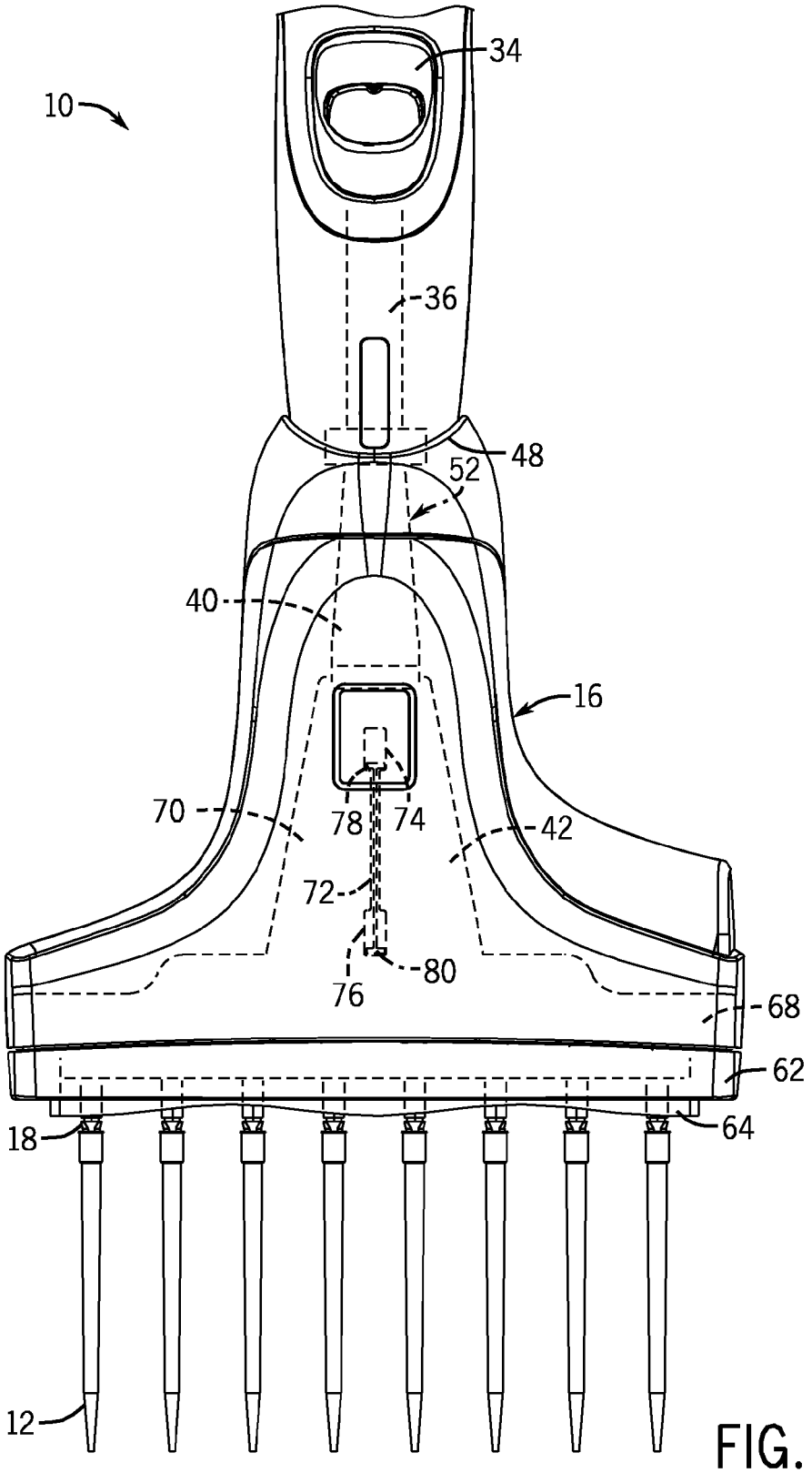

FIG. 3

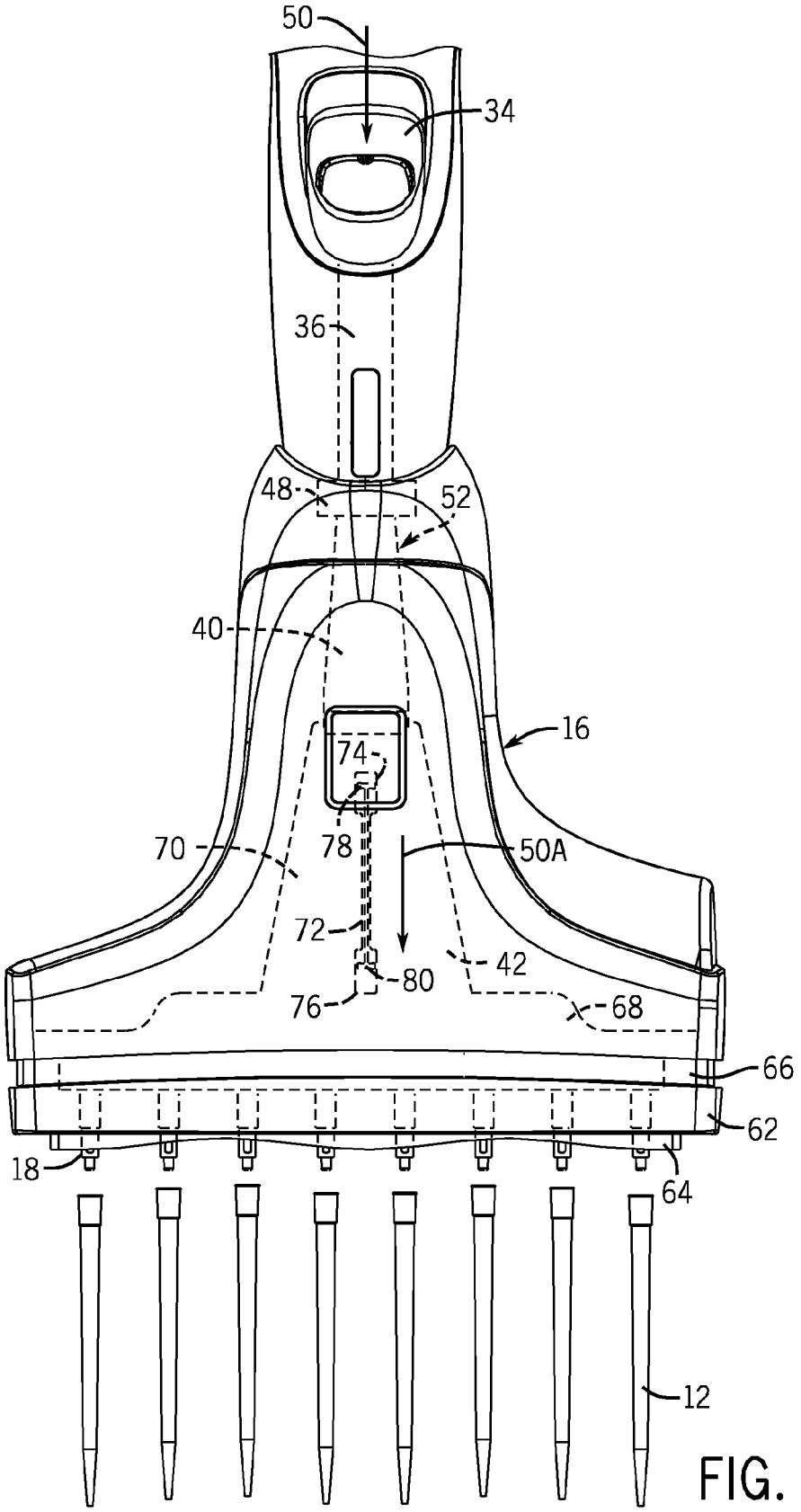

FIG. 4

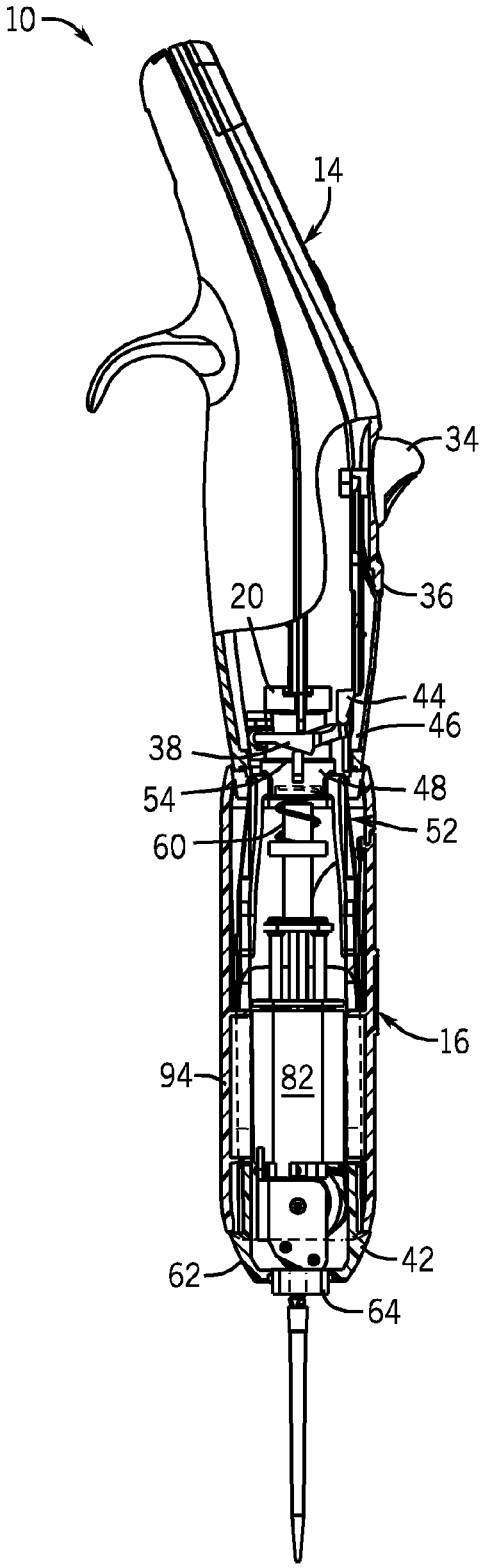
10
14
34
36
20
44
46
38
54
48
52
60
16
94
82
42
62
64

FIG. 5A

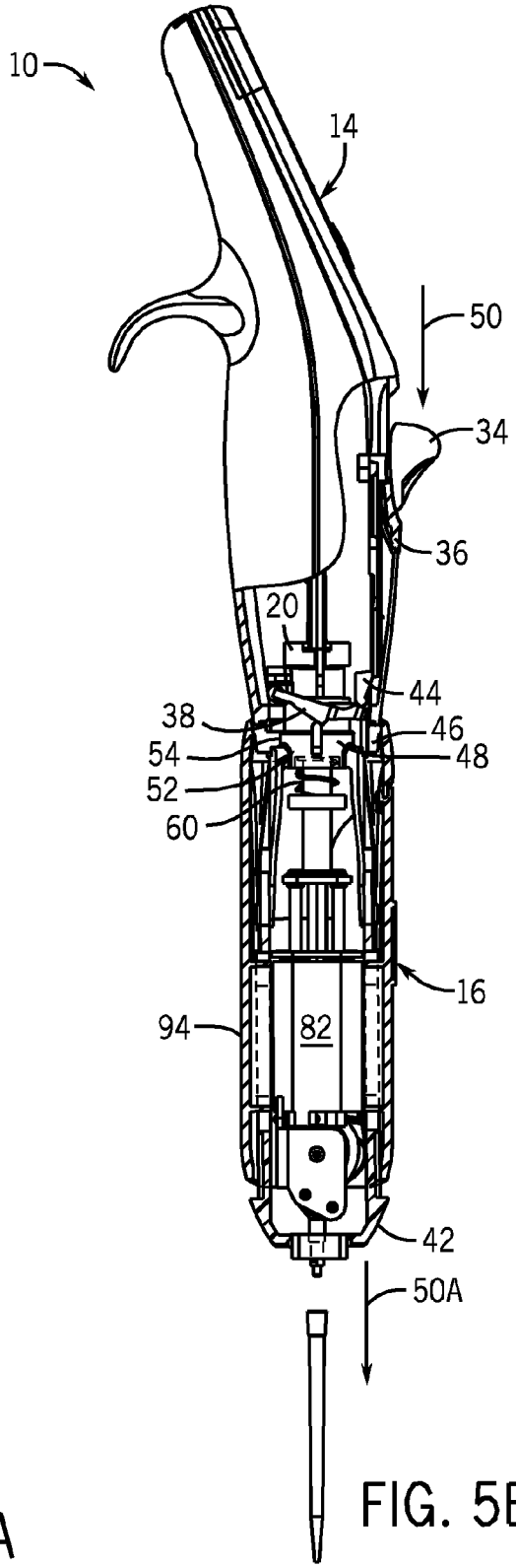
10
14
50
34
36
20
44
38
46
54
48
52
60
16
94
82
42
50A

FIG. 5B

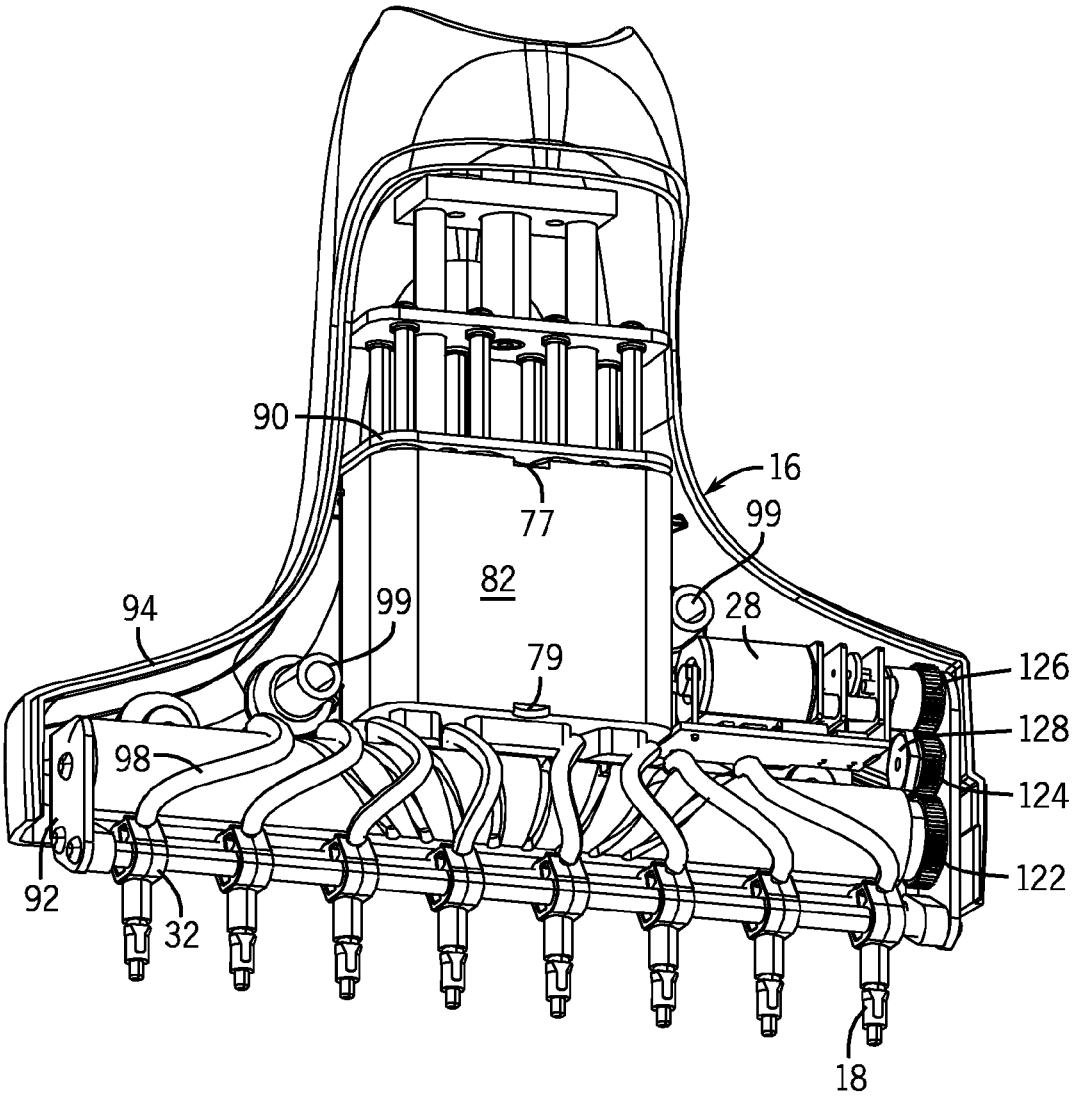

FIG. 6

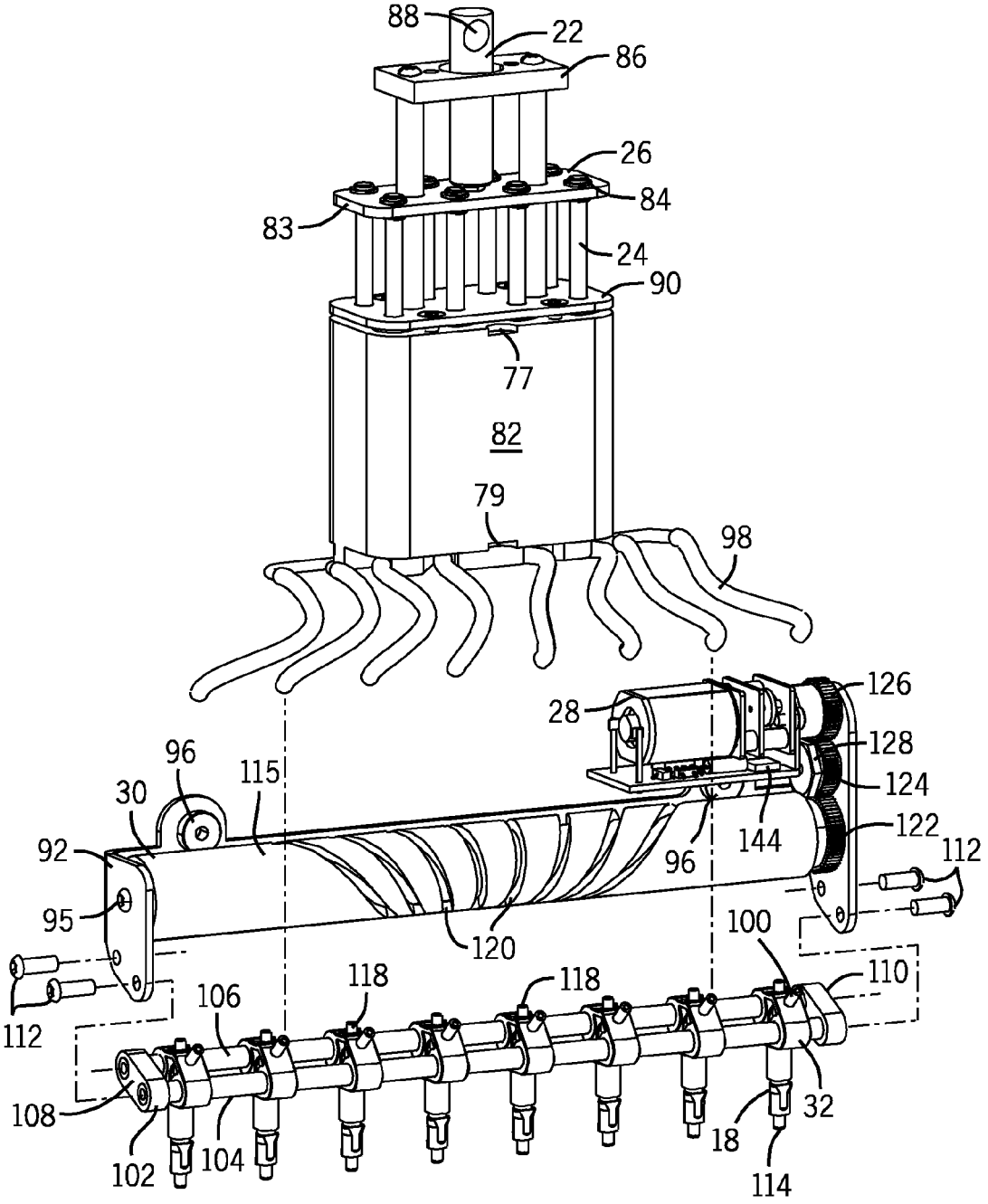
88
22
86
26
84
83
24
90
77
82
79
98
126
28
128
96
115
124
30
144
122
92
96
112
95
120
100
110
118
118
106
112
108
32
18
102
104
114

FIG. 7

FIG. 8A

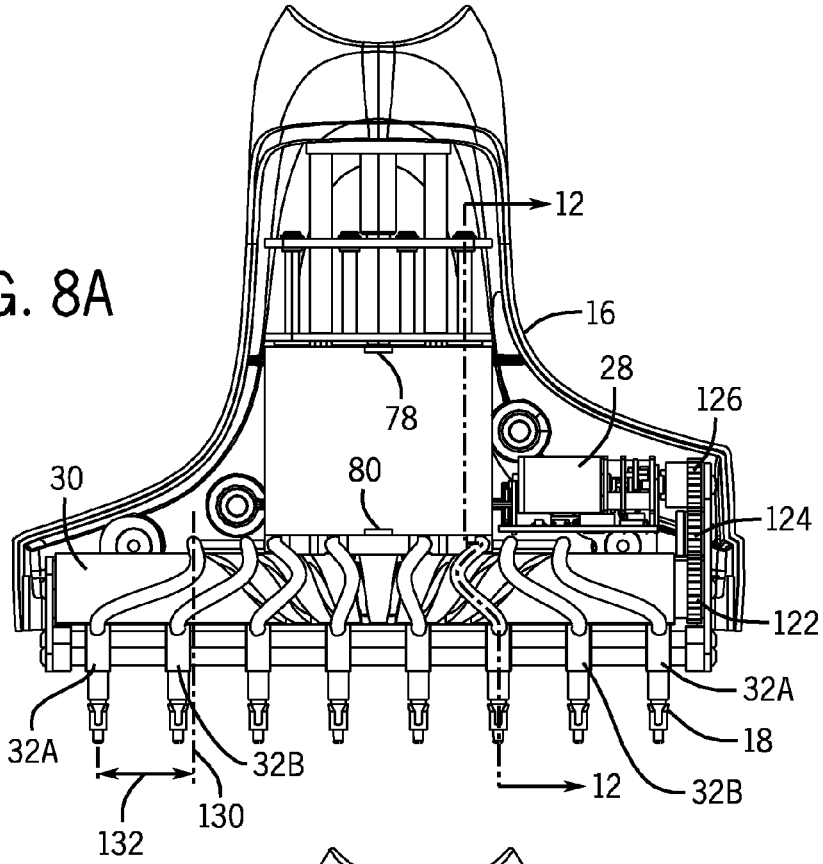
12
16
28
126
78
80
30
124
122
32A
32A
18
32B
12
32B
130
132

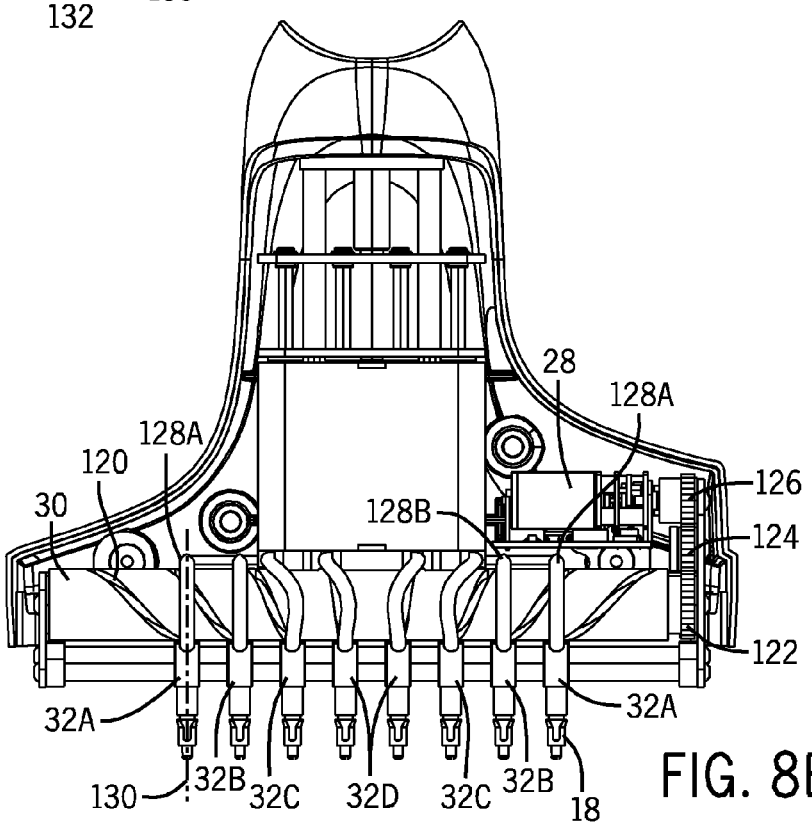
28
128A
128A
120
126
30
128B
124
122
32A
32A
130
32B
32C
32D
32C
32B
18

FIG. 8B

FIG. 8C

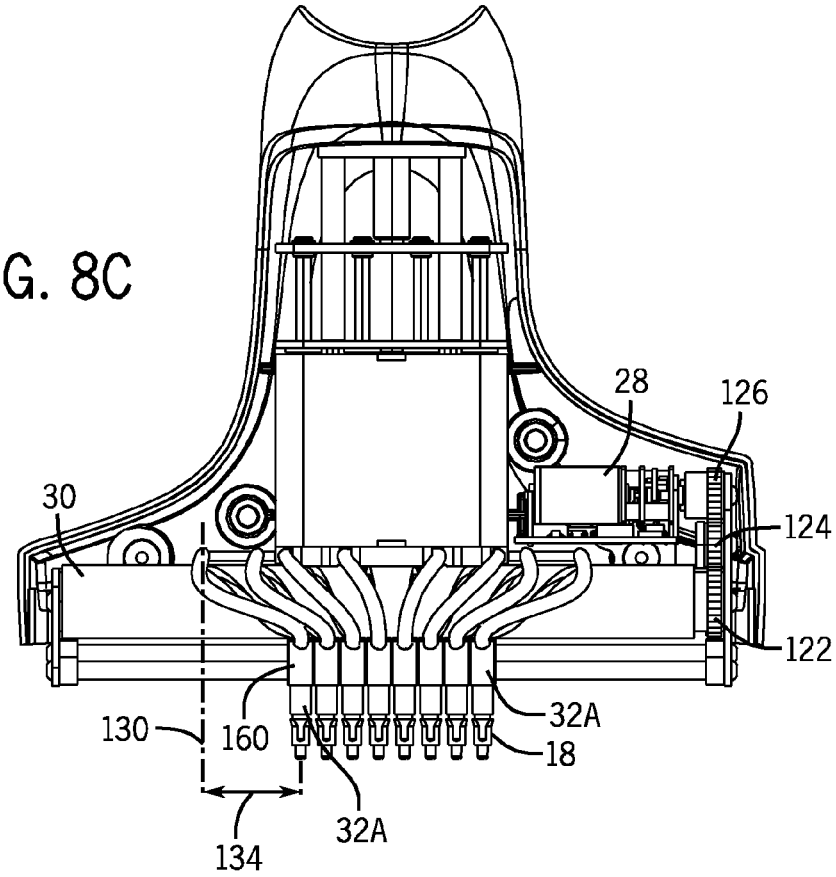
28
126
30
124
122
32A
130
160
18
32A
134

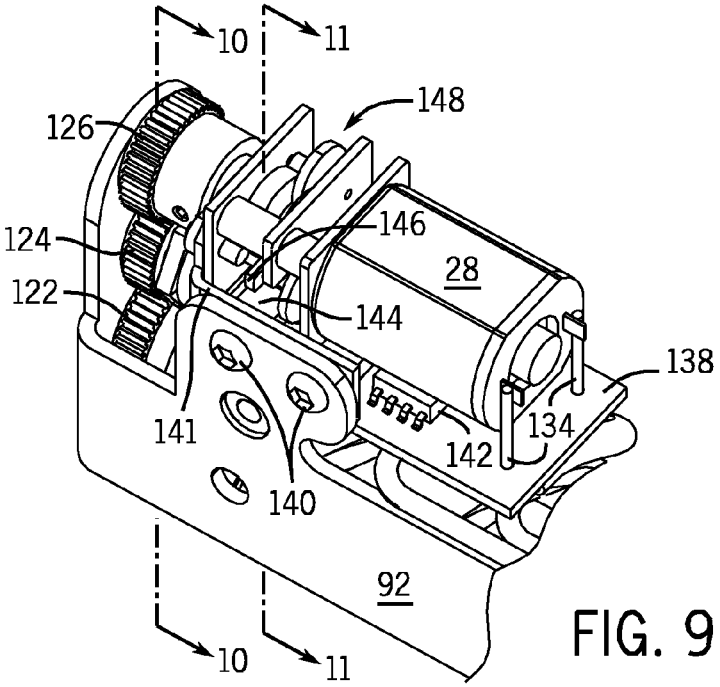
10
11
148
126
146
124
28
122
144
138
141
134
142
140
92
10
11

FIG. 9

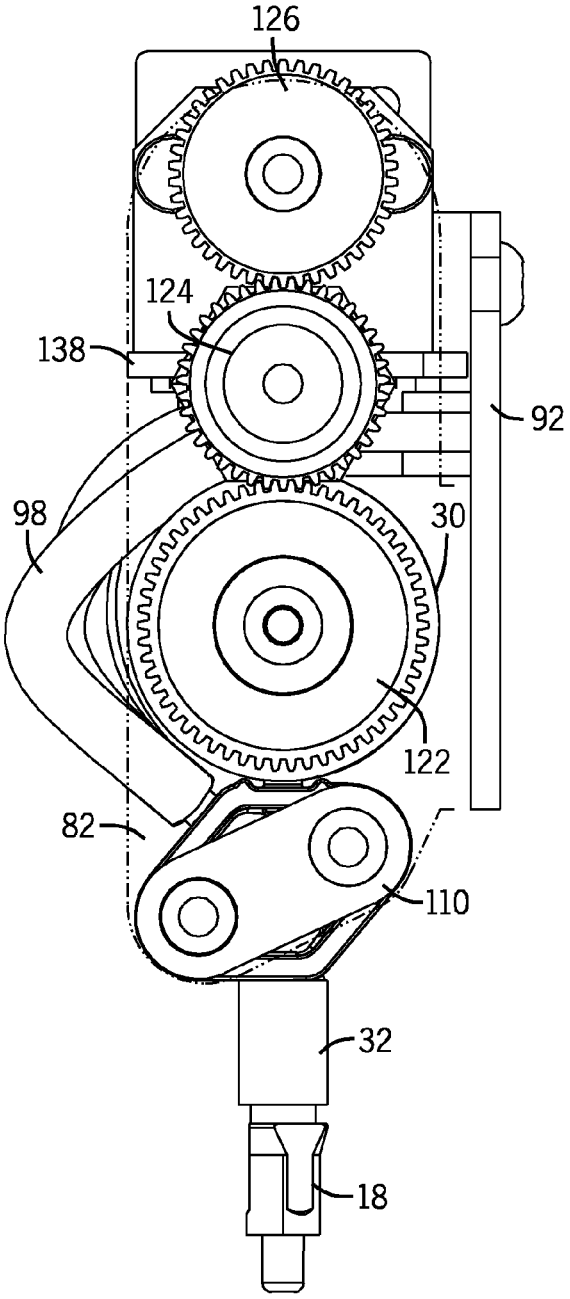
126
124
138
92
98
30
122
82
110
32
18

FIG. 10

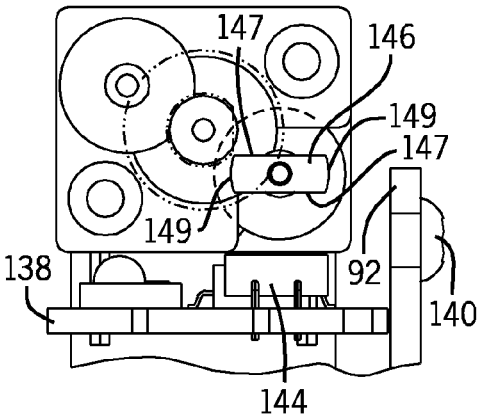
147
146
149
147
149
138
92
140
144

FIG. 11

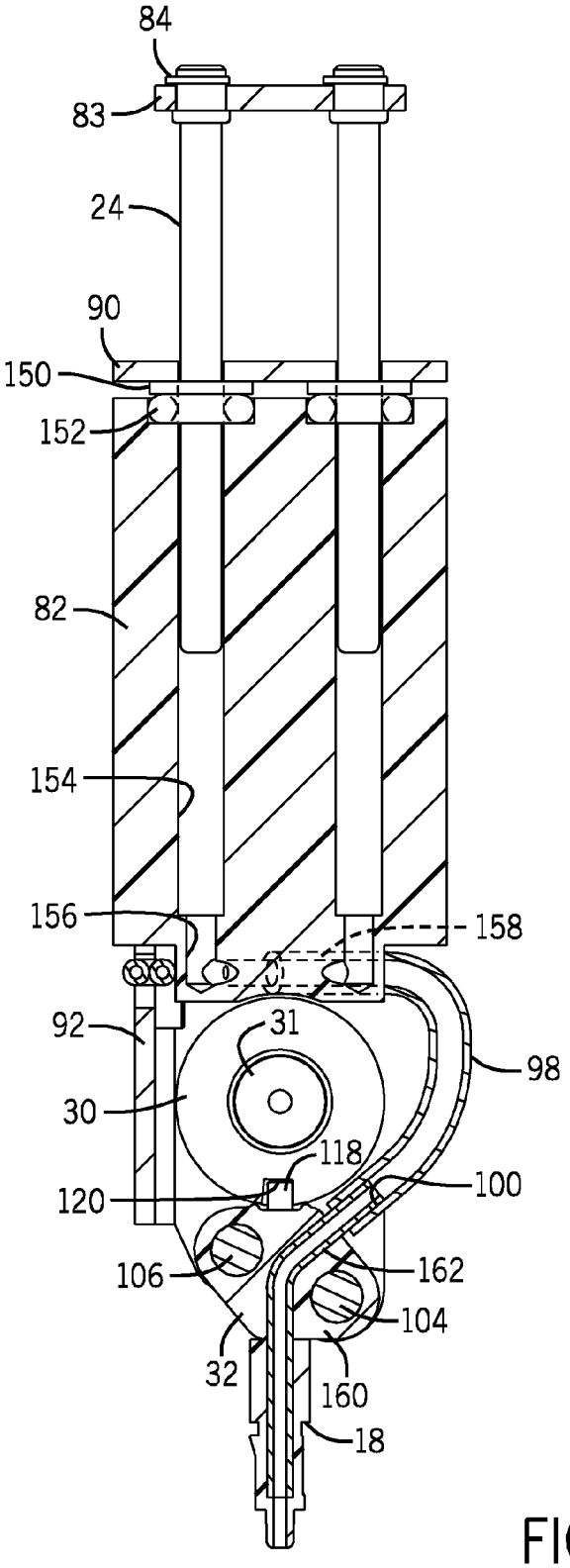
84
83
24
90
150
152
82
154
156
158
92
31
98
30
118
120
100
106
162
104
32
160
18

FIG. 12

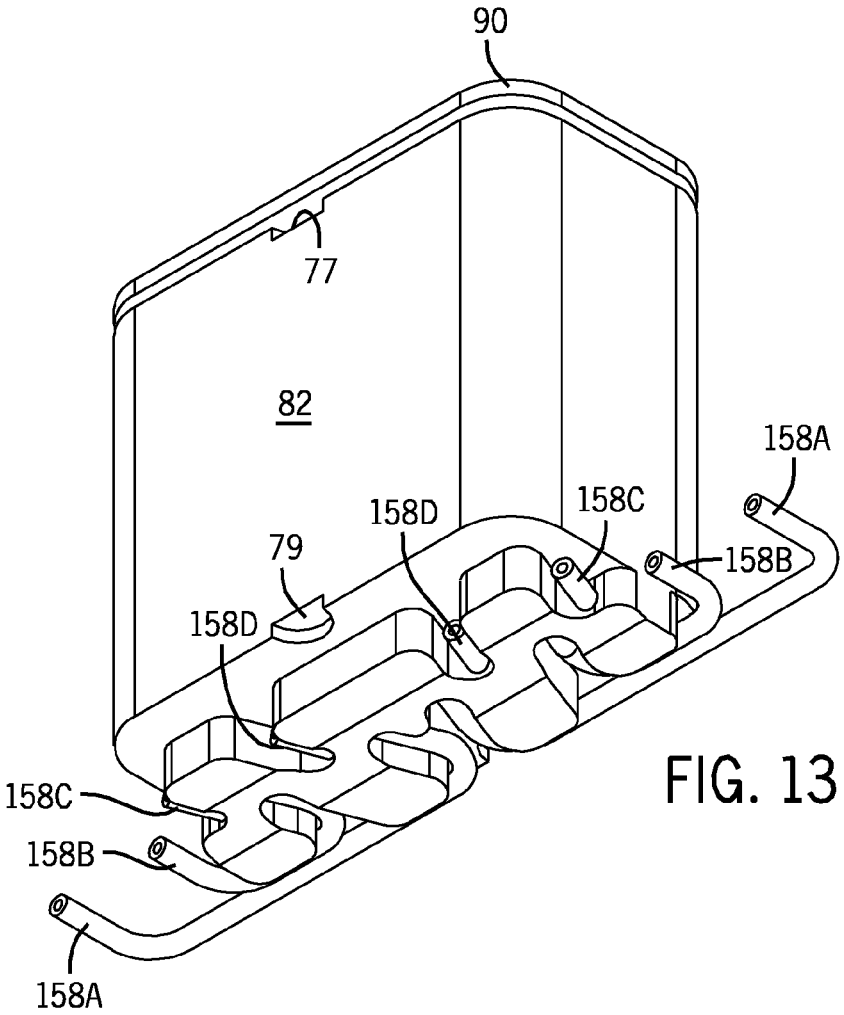
90
77
82
158A
158C
158D
158B
79
158D
158C
158B
158A

FIG. 13

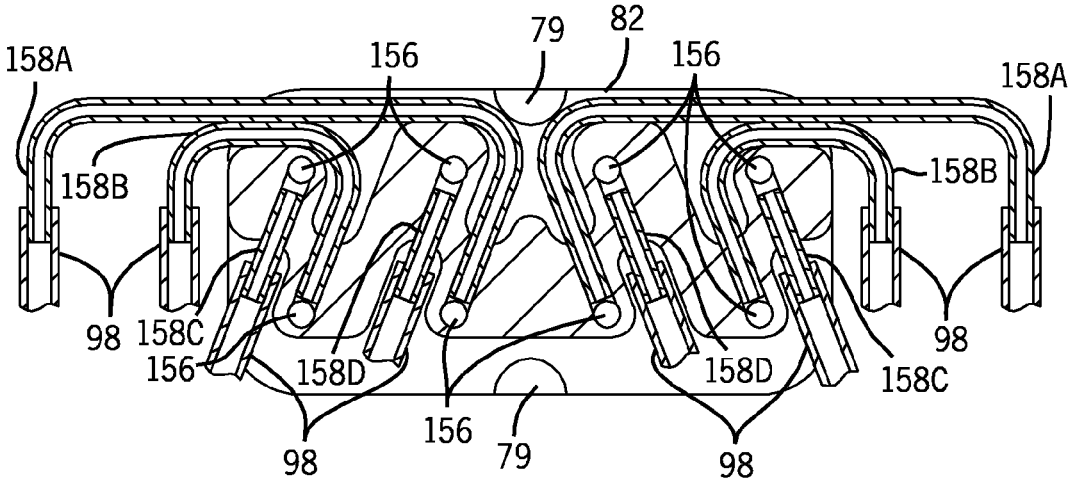
158A
156
79
82
156
158A
158B
158B
98
158C
156
158D
158D
158C
98
98
156
79
98

FIG. 14

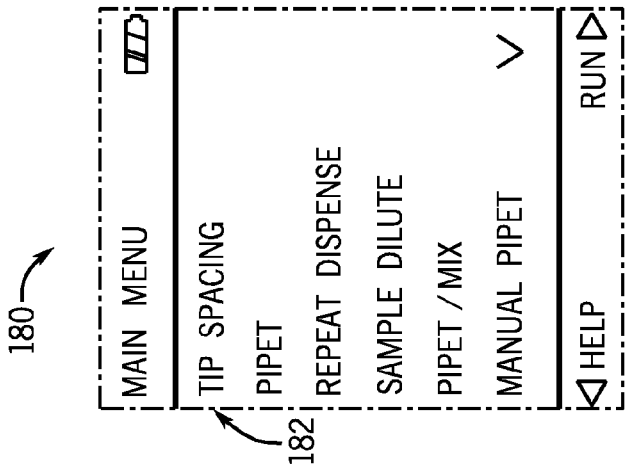

FIG. 15A

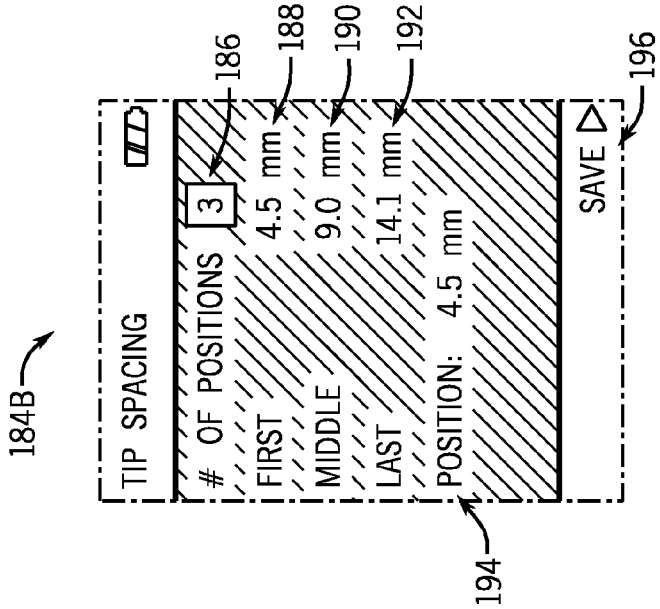

FIG. 15B

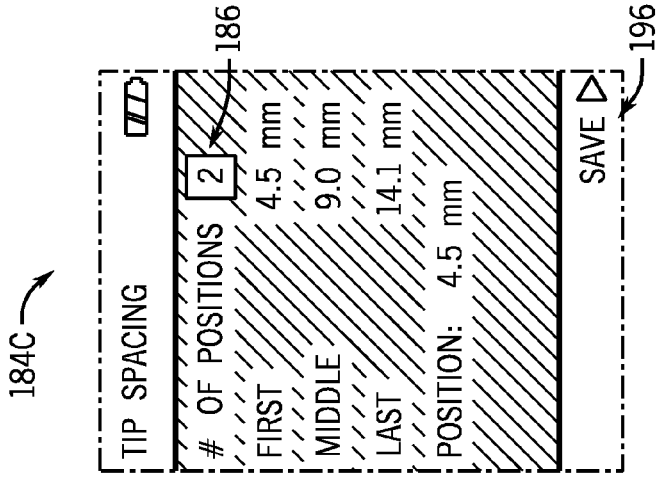

FIG. 15C

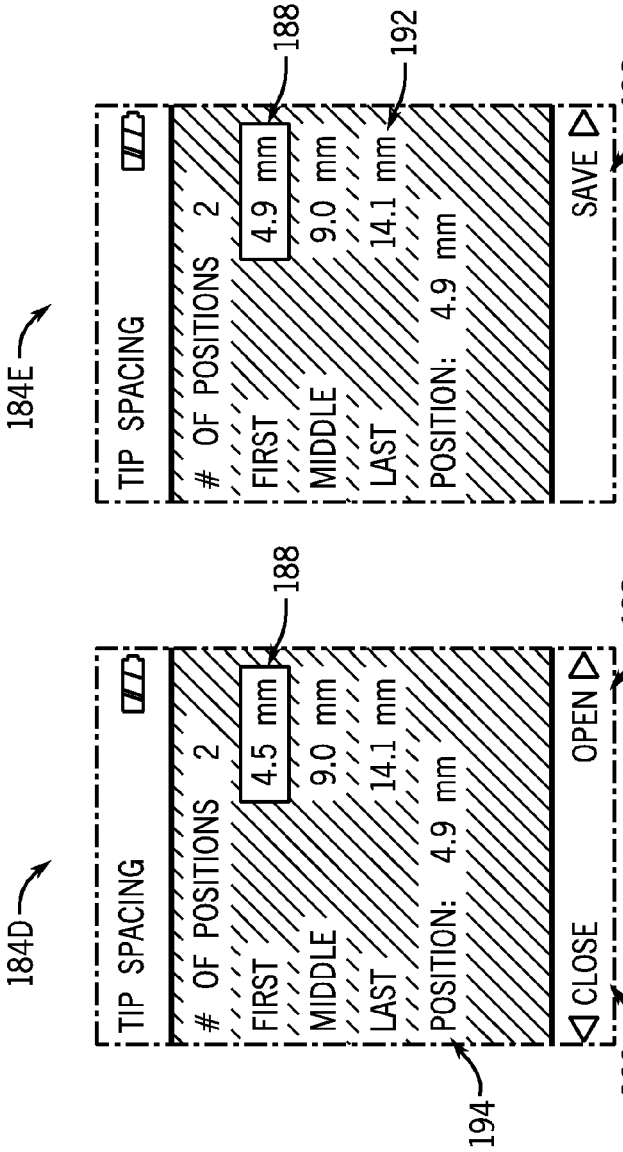

FIG. 15D

FIG. 15E

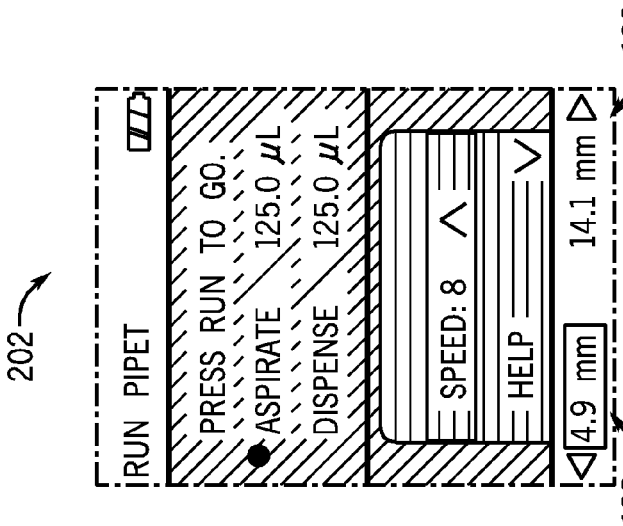

FIG. 15F

MULTI-CHANNEL PIPETTOR WITH REPOSITIONABLE TIPS

CROSS REFERENCE TO RELATED APPLICATION

This application is a continuation of U.S. patent application Ser. No. 13/411,675, filed Mar. 5, 2012, which is a continuation of U.S. patent application Ser. No. 13/219,823, filed Aug. 29, 2011, now U.S. Pat. No. 8,128,892, issued Mar. 6, 2012, which application is a division of U.S. patent application Ser. No. 12/115,005, filed May 5, 2008, now U.S. Pat. No. 8,029,742, issued Oct. 4, 2011.

FIELD OF THE INVENTION

The invention relates to hand-held, multi-channel electronic pipettors, and in particular, those having repositionable tip fittings or mounting shafts for disposable pipette tips.

BACKGROUND OF THE INVENTION

Hand-held, Multi-channel pipettors are designed to enable laboratory workers to transfer multiple samples or reagents from one series of containers to another series of containers, such as from one row of wells in a microtiter plate to another row of wells in another microtiter plate. While some multi-channel pipettors rely on manually powered piston movement for aspirating and dispensing, many use electronically controlled stepper motors to control piston movement for aspirating and dispensing. It is quite common in laboratories to have microtiter plates or well plates with 24, 96, 384, or 1536 wells in an array of rows and columns. Typically, but not always, the center line spacing between wells is 9 mm or some fraction or multiple thereof. Center-to-center spacing between pipette tip mounting shafts is therefore often fixed in multi-channel pipettors, for example, 9 mm or 4.5 mm spacing.

On the other hand, some multi-channel electronic pipettors allow the user to manually adjust the center-to-center spacing between the tip fittings. This feature allows lab workers to transfer multiple samples of liquids from a series of containers having one center line spacing to another series of containers having different center line spacing. In other words, some hand-held pipettors on the market allow the user to reposition the pipette tips so that a sample or reagent can be aspirated into multiple pipette tips from a series of wells, tube or other containers having a first center-to-center spacing (e.g. 4.5 mm) and then dispensed into another series of wells, tubes or other containers having a different spacing (e.g. 9 mm). For example, U.S. Pat. No. 6,235,244 discloses a multi-channel pipettor where the center line spacing between the tip fittings is controlled manually by a scissors mechanism actuated by pulling a rod on the exterior of the pipettor. The mounting shafts or fittings for the pipette tips are attached to the scissors mechanism which expands or contracts as needed to reposition the pipette tips. The individual fittings slide along a path defined by a slotted track in the housing for the lower multi-channel assembly. In this design, the complexity of the scissors mechanism, as well as its off-center drive point, can produce inaccuracies in the center-to-center spacing for the individual tip fittings. These units also require two hand operation; one hand for holding the unit and the other to operate the change-in-spacing mechanism.

In contrast to hand-held pipettors, automated, stationary pipetting systems have in the past used roller drums with cam tracks to adjust the center-to-center spacing between pipette tip mounting shafts, again in order to facilitate aspiration from a first series of containers or wells and dispensing into a second series having a different center line spacing. Such a system is disclosed in U.S. Pat. No. 4,830,832. Of course, design constraints for stationary lab equipment as to size and scale are not critical, as compared to band-held pipettors. With hand-held pipettors, it is important that the design be compact, and that weight be kept to a minimum. It is also particularly important that the width of the lower multi-channel assembly from front to back be kept Slender in order to allow the user to easily view the mounted pipette tips. Further, it is important to keep the overall height of the pipettor at a minimum in order to optimize ergonomics and control. In addition, it is important that hand-held, electronic pipettors, not only provide accurate pipetting functions as well as accurate tip spacing, but also provide a smooth operating mechanism that draws minimal power, allow one handed operation and employ an intuitive control system.

SUMMARY OF THE INVENTION

As mentioned, the invention pertains to improvements in hand-held, multi-channel electronic pipettors having repositionable tip fitting assemblies. In the preferred embodiment, the pipettor includes a handle assembly that is adapted to be held in the palm of a user's hand, and a lower multi-channel assembly having a cylinder block with multiple aspiration cylinders, a multi-piston assembly, and a plurality of repositionable tip fitting assemblies. Each repositionable tip fitting assembly has a downwardly extending pipette tip mounting shaft. In one aspect, the invention relates to the use of it motor dedicated to controlling the movement and repositioning of the tip fitting assemblies to adjust the center to center spacing between the pipette tip mounting shafts. The motor is preferably controlled by user programmed and operated software, loaded into the pipettor, that is a modified version of software normally in place to operate a stepper motor to drive the pistons to aspirate and dispense, but modified to further control the additional motor to reposition the center to center spacing of the pipette tips. The software preferably allows the user to set two or three position settings which can be easily navigated on a repeatable basis in a reliable and convenient manner by hitting buttons on the pipettor user interface. In the preferred embodiment, the stepper motor for controlling the movement of the pistons in order to aspirate and dispense is located in the upper handle assembly, as is known in the art. The second motor for moving the piston mounting shafts to adjust the center to center spacing is preferably located in the lower multi-channel assembly.

The preferred lower multi-channel assembly has a chassis to which the motor is mounted, and includes vertically stacked gears to transmit power vertically downward from the motor output shaft to a roller drum. The vertically stacked gears as well as locating the motor above the roller drum allow the lower multi-channel assembly to maintain a slender profile. The roller drum is preferably made of a lubricious material and is machined with cam tracks in its outer surface. The bodies of the repositionable tip fitting assemblies are slidably mounted on at least one but preferably two guide rods residing below and parallel to the roller drum. The repositionable tip fitting assemblies include a port to receive flexible tubing from the cylinder block, a downwardly extending pipette tip mounting shaft, and an upwardly extending can following pin. When the pipettor is assembled, the cam following pin resides in an associated cam track on the roller drum. The pitch of each cam track is selected so that the center to center distance between adjacent pipette tip mounting

shafts changes evenly as the roller drum is rotated. Preferably, the total path wrap for each cam track is less than one full revolution of the roller drum. Operation of the motor in the lower multi-channel assembly adjusts the center-to-center spacing between the pipette tip mounting shafts by rotating the vertically stacked gears which in turn rotates the roller drum, and the cam tracks translate that rotational motion into linear motion of the repositionable tip fitting assemblies from which the pipette tip mounting shafts depend. The preferred motor is a miniature DC gear motor, which uses cluster gears in order to reduce rotational output speed through the vertically stacked gears and roller drum. In one embodiment, a reflective photo detector is used to count revolutions of a flag rotating in sync with one of the cluster gears in order to provide feedback as to the positioning of the roller drum and hence the repositionable tip fitting assemblies. Alternatively, and perhaps preferably, the photo detector may be used to count passing gear teeth directly.

While the use of a roller drum with cam tracks is the preferred means for moving the repositionable tip fitting assemblies, many aspects of this invention can be implemented without the use of a roller drum. For example, the repositionable tip fitting assemblies can be moved using a mechanical scissors mechanism as is known in the art, other types of mechanical cam mechanism such as a cam plate, mechanical screws, or even by the use of repelling magnets.

Another aspect of the invention relates to the management of flexible tubing between stationary output ports for the aspiration cylinders and the input ports to the repositionable tip fitting assemblies. It has been found desirable to use rigid tubing, from output ports of a cylinder block to fix a location where it is then desirable to attach the flexible tubing that leads to the respective repositionable tip fitting assembly. In order to provide a slender design for the lower assembly, it is desirable that the outlet of the rigid tubing be set back from the front surface of the cylinder block, or more to the point, set back from of the front surface of the drum. Also, the amount of flexible tubing can be reduced, thereby simplifying tube management and reducing space requirement, if the outlet for the rigid tubes for the outermost channels is located at or near the center of the range of motion for the outermost repositionable tip fitting assemblies. It has therefore been found desirable to run the rigid tubes for the outermost repositionable fittings rearward as the rigid tubes exit the cylinder block and then bend the tubes outward beyond the periphery of the cylinder block. In addition, it is desired that the port on the repositionable tip fitting assemblies point upward angularly, preferably at about 40° or tangent to the roller drum in order to reduce the amount of Space in front of the cylinder block required for the flexible tubing.

In another aspect of the invention, the multi-channel pipettor provides an improved ejection mechanism that includes several features to facilitate effective and ergonomic tip ejection. The preferred ejector mechanism includes an ejector push bar having an accelerator portion and a decelerator portion as well as a rocker arm, in manner similar, although modified, to that disclosed in copending patent application entitled "Pipette Tip Ejection Mechanism", application Ser. No. 11/856,193, by Gregory Mathus and Richard Cote, filed Sep. 17, 2007, which is assigned to the assignee of the present application and also incorporated herein by reference. During the beginning of the stroke of the ejector button, the decelerator portion of the ejector push bar engages the rocker arm which in turn engages an ejection mechanism in the lower multi-cylinder assembly. The leverage of the rocker arm provides mechanical advantage to enhance the ejection force during the beginning of the stroke of the ejector button. Towards the bottom of the stroke of the ejector button, the accelerator portion of the push bar engages the ejection mechanism in the lower multi-channel assembly, thereby providing sufficient stroke to ensure ejection of all of the pipette tips. The ejection mechanism for the lower assembly includes, among other features, a lower stripper bar with a continuously varied stripping height, preferably a sinusoidal varying stripping height with a maximum height at the center and at the outermost position for the pipette tips. In this manner, the multiple pipette tips are ejected in pairs and each pair is ejected at a slightly different moment from the other pairs, thereby reducing the maximum ejection force required.

Other features and advantages of the pipettor should be apparent to those skilled in the art upon reviewing the following drawings and description thereof.

BRIEF DESCRIPTION OF THE DRAWINGS

FIG. **1** is a perspective view of a hand-held, electronic multi-channel pipettor having repositionable pipette tips and constructed in accordance with a preferred embodiment of the invention.

FIG. **2** is a view of the pipettor shown in FIG. **1** with the upper and lower housing removed (shown in phantom) in order to illustrate various internal components of the pipettor.

FIG. **3** is a front plan view of lower sections of the pipettor shown in FIGS. **1** and **2**.

FIG. **4** is a view similar to FIG. **3** schematically illustrating the ejection of multiple pipette tips from the pipettor.

FIG. **5**A is a side devotional view of the pipettor illustrated in FIGS. **1-4** with lower portions of the housing broken away in order to illustrate internal components of the pipettor.

FIG. **5**B is a view similar to the view shown in FIG. **5**A but also schematically illustrating the ejection of pipette tips from the pipettor.

FIG. **6** is a perspective view of the lower portion of the pipettor illustrated, in FIGS. **1-5** with a front part of the lower housing removed in order to show internal components.

FIG. **7** is an assembly drawing of many of the internal components of the lower portion of a pipettor shown in FIG. **6**.

FIGS. **8**A-**8**C are front elevational views of the lower portion of the pipettor shown in FIGS. **1-7** which schematically illustrate the pipette tip fitting assemblies being fully open, FIG. **8**A, in an intermediate position. FIG. **8**B, and in a closed position, FIG. **8**C.

FIG. **9** is a detailed view of a motor and gears for moving the pipette tip fitting assemblies to adjust the center line spacing between the mounting shafts between aspiration and dispense cycles.

FIG. **10** is a view taken along line **10-10** in FIG. **9**.

FIG. **11** is a view taken along line **11-11** in FIG. **9**.

FIG. **12** is a cross-sectional view taken along line **12-12** in FIG. **8**A.

FIG. **13** is a lower perspective view of an aspiration cylinder block used in the lower portion of the pipettor shown in FIGS. **1-12**.

FIG. **14** is a cross-sectional view taken along the plane through which the outlet ports from the aspiration cylinders exit the cylinder block shown in FIG. **13**.

FIGS. **15**A-**15**F illustrate user interface screens that are displayed on the pipettor shown in FIGS. **1-14** in order to program and execute the repositioning of pipette tips.

DETAILED DESCRIPTION OF THE PREFERRED EMBODIMENT OF THE INVENTION

FIG. **1** illustrates a hand-held, electronic multi-channel pipettor **10** having repositionable pipette tips **12**, and con-

structed in accordance with the preferred embodiment of the invention. The pipettor shown in FIG. **1**, as well as the other Figures, illustrates an 8-channel pipettor, however, the invention is not limited to pipettors having eight channels. For example, pipettors having twelve channels, or some other number of channels, are common and are contemplated as being within the scope of the invention.

The multi-channel pipettor **10** includes an upper handle assembly **14** and a lower multi-channel assembly **16**. The pipette tips **12** are mounted to pipette tip fittings or mounting shafts **18**, hidden in FIG. **1** but shown clearly in FIG. **6** as well as in other figures. The pipette tips **12**, when mounted, generally lie in a vertical plane when the pipettor **10** is held vertically, but are repositionable within the vertical plane in order to change the center-to-center spacing between the tips **12**. The upper handle assembly **14** includes a housing **19** that is designed to be held in the palm of the user's hand. Internal components contained within the upper handle assembly **14**, as discussed below, include an electronically controlled stepper motor **20** (see, FIG. **2**) that drives an output shaft up and down in order to aspirate and dispense. The lower multi-channel assembly **16** includes a main piston drive shaft **22** (see, FIG. **7**) which is connected to and driven by the output shaft for the stepper motor **20**. The main piston drive shaft **22** consequently drives a piston drive plate **26** and a plurality of pistons **24** (see, FIG. **7**) extending downward from the piston drive plate **26** in order to aspirate and dispense through the multiple, repositionable pipette tips **12**.

In the preferred embodiment, the multi-channel pipettor **10** includes many features discussed in copending patent applications that are assigned to the assignee of the present application and incorporated herein by reference. With respect to the internal components of the upper handle assembly **14**, its operation in the preferred embodiment is described generally in copending patent application entitled "Electronic Pipettor Assembly", application Ser. No. 11/856,231, by Gary E. Nelson, George P. Kalmakis, R. Laurence Keene, Joel Novak, Kenneth Steiner, Jonathan Finger, Gregory Mathus and Richard Cote, filed on Sep. 17, 2007, assigned to the assignee of the present application and incorporated herein by reference, and copending application entitled "Pipettor Software Interface", application Ser. No. 11/856,232, by George Kalmakis, Gary Nelson, Gregory Mathus, Terrence Kelly, Joel Novak, Kenneth Steiner, and Jonathan Finger, filed Sep. 17, 2007, assigned to the assignee of the present application and incorporated herein by reference. The preferred configurations for the pipette tips and the pipette tip mounting shafts are disclosed in copending patent applications entitled "Locking Pipette Tip and Mounting Shaft", application Ser. No. 11/552,384, by Gregory Mathus, Terrence Kelly and Richard Cote, filed on Oct. 24, 2006, assigned to the assignee of the present application and incorporated herein by reference, and continuation-in-part application Ser. No. 11/934,381 entitled "Locking Pipette Tip and Mounting Shaft", by Gregory Mathus, Terrence Kelly and Richard Cote, filed on Nov. 2, 2007, which is also assigned to the assignee of the present application and incorporated herein by reference. Many aspects of the preferred ejection mechanism for the multi-channel pipettor **10** are disclosed in copending patent application entitled "Pipette Tip Ejection Mechanism", application Ser. No. 11/856,193, by Gregory Mathus and Richard Cote, filed Sep. 17, 2007, which is assigned to the assignee of the present application and also incorporated herein by reference. Differences in the ejection mechanism for the preferred embodiment herein are now discussed.

Referring now to FIG. **2**, the housings for the upper handle assembly **14** and the lower multi-channel assembly **16** have been removed to display certain internal components of the pipettor **10**. As mentioned, the upper handle assembly has an electronically controlled stepper motor **20** for driving an output shaft that moves up and down to control the movement of the pistons **24** in the lower multi-channel assembly **16**. The pipettor **10** also includes a second motor **28**, preferably a miniature DC gear motor, which drives a tracked roller drum **30** to slide repositionable tip fitting assemblies **32** in order to adjust the center line spacing between the tip fittings **18**. FIG. **2** also shows certain components of the ejection mechanism, including an ejector button **34**, an ejector push bar **36**, and a rocker arm **38** located generally in the upper handle assembly **14**, as well as a forked ejection collar **52** in the lower multi-channel assembly **16** which is connected to a lower stripper assembly **42** that ejects the pipette tips **12** from the tip fitting mounting shafts **18**, as described in FIGS. **3**, **4** and **5**A-**5**B.

Referring now to FIGS. **3**, **4** and **5**A-**5**B, as mentioned, the preferred ejection mechanism uses an ejector push bar **36** and a rocker arm **38** having a configuration similar to the preferred configuration disclosed in copending and incorporated U.S. patent application Ser. No. 11/856,193, entitled "Pipette Tip Ejection Mechanism." Although the preferred configuration is slightly modified, as will be discussed below, the ejector push bar **36** includes a decelerator portion **44** and an accelerator portion **46**, see FIGS. **5**A-**5**B. The rocker arm **38** is pivotally mounted to the internal frame in the upper handle assembly **14**, and has a downward facing surface that engages a collar **48** in the lower multi-channel assembly **16**. When the user presses the ejector button **34** in the direction of arrow **50**. FIG. **5**B, the ejector push bar **36** moves downward, and during the beginning of the downward stroke, the decelerator portion **44** engages the rocker arm **38** which in turn engages the collar **48** to provide downward movement to the ejection mechanism in the lower multi-channel assembly **16**. Preferably, the collar **48** in the lower assembly **16** is part of an integral forked ejection collar member **52**. The forked ejection collar has downwardly extending tabs **40** which are connected on either side of the lower multi-channel assembly **16** to the lower stripper assembly. The collar **48** includes two upwardly extending pedestals **54** which as shown in FIGS. **5**A and **5**B are the locations where the rocker arm **38** engages the collar **48**. At some point, the accelerator portion **46** on the ejector push bar **36** directly engages a seat **56**. FIG. **2** on the forked ejection collar **52**. The seat **56** is located at a height below the height of the pedestal **54**, which helps to reduce the overall height of the pipettor **10**. A spring **60** biases the forked ejection collar **52**, as well as the entire ejection mechanism upward. As described in the above incorporated copending patent application Ser. No. 11/856,193, the transmitted ejection force to the lower multi-channel assembly **16** is increased above the amount of force applied to the ejector button **34** via mechanical advantage due to the leverage of the rocker arm **38** over the first portion of the stroke of the ejector button **34**. Over the lower portion of the stroke of the ejector button **34**, the accelerator portion **46** directly engages the seat **56** in the forked ejection collar assembly **52** and the transmitted ejection force is not increased via mechanical advantage, but the stroke for the ejection assembly in the lower multi-channel assembly **16** is not further reduced, thereby ensuring reliable tip ejection.

The lower stripper assembly **42** is preferably an integrally molded plastic component having a base **62** having a longitudinal slot **66**, FIG. **1**, through which the pipette tip mounting shafts **18** extend. The base **62** also includes a stripper bar **64** that surrounds the longitudinal slot **66**, FIG. **1**. The slot is preferably slightly longer than 99 mm, in order to accommodate a preferred maximum span of 99 mm between pipette

tips. The stripper bar **64** is preferably machined from, for example, aluminum and attached to the base **62**. The lower surface of the stripper bar **64** is preferably sinusoidal in shape with a peak being located along the center of the longitudinal slot **66** and other peaks being located at the ends of the longitudinal slot **66**. The preferred difference in height between the peaks and valleys of the sinusoidal ejection surface is 2 mm. The sinusoidal ejection surface distributes the required ejection forces in time as the pipette tips **12** are being ejected, as illustrated in FIG. **4**. FIG. **4** shows the pipette tips **12** fully spread, but it should be appreciated that the sinusoidal stripper bar **64** will distribute the required ejection forces in time among the tips **12** even if the tip mounting shafts **18** are fully tightened or are in an intermediate position.

Above the base **62**, the lower stripper assembly **42** includes a lower sleeve portion **68** and upper extension panels **70**. The lower sleeve portion **68** and extension panels **70** are contained within the housing for the lower assembly **16**, whereas the base **62** is exposed externally. Although not clearly shown in the Figures, the downwardly extending tabs **40** on the forked ejection collar **52** preferably include a snap fitting which engages a corresponding snap fitting on one of the extension panels **70**. In this manner, the forked ejection collar assembly **52** and the lower stripper assembly **42** (which includes integrally molded extension panels **70**, lower sleeve portion **68**, and base **62**, as well as the machined stripper bar **64**) move up and down as a unitary member.

On each side of the pipettor **10**, the extension panel **70** contains a vertical guide slot. Preferably, the slot **72** has an upper widened groove portion **74** and a lower widened groove portion **76**. These widened groove portions **74**, **76** are designed to receive tabs **78**, **80**, respectively, extending from the inner sidewall the housing **16**. This occurs on both sides of the pipettor **10**. The tabs **78**, **80** are also received in detents **77**, **79** (See, FIG. **6**) within the cylinder block **82** to secure the cylinder block **82** to the pipettor **10**. FIG. **3** shows the pipettor **10** in its normal operating position, and shows upper tab **78** engaging the lower wall of the widened groove portion **74**, and lower tab **76** engaging the lower wall of widened groove portion **80**. FIG. **4**, on the other hand, illustrates the ejection mechanism in the fully down position at the end of the ejection stroke. The upper tab **78** does not preferably engage the upper wall of the widened groove **74**, nor does the lower tab **80** engage the upper wall of widened groove **76**. The distance between the upper and lower walls in widened grooves **74**, **76** should be equal to or greater than to the full stroke length in the lower assembly **16**. Note that the stroke of the ejector button **34** actuated by the user, as indicated by arrow **50**, is longer than the stroke of the ejection mechanism for the lower assembly **16**, as indicated by arrow **50**A.

Referring now to FIGS. **6** and **7**, the main piston drive shaft **22** in the lower assembly **16** is attached at its lower end to a piston drive plate **83**, preferably using a screw. A plurality of pistons **24** are attached to the drive plate **83**, for example using snap rings **84**. A spring support **86** extends upward from the aspiration cylinder block **82**. Although not shown in the drawings, a spring is placed around the main piston drive shaft **22** between the spring support **86** and the underside of the collar portion of the forked ejection collar **52**. Legs for the spring support **86** pass through the openings in the piston drive plate **83**. The main piston drive shaft **22** passes through an opening in the upper plate for the spring support **86**. The upper end of the main piston drive shaft **22** is connected to the output shaft driven by the stepper motor **20** in the upper handle assembly **14**. The main piston drive shaft **22** may be preferably connected to the output shaft from the upper handle assembly **14** using any suitable method although it is preferred that the internal components of the lower assembly **16** be removable. FIG. **7** shows a socket **88** in the main piston drive shaft **22**. Preferably, a ball is present at the distal end of the output shaft driven by the stepper motor **20** in the upper assembly **14**, although this is not shown in the drawings. The ball is preferably received from the side of the socket **88** and a plunger is preferably used to secure the ball within the socket **88**.

The cylinder block/piston assembly also preferably includes a seal hold down plate **90** which has a plurality of openings for the pistons **24**. A seal **152** and T-sleeve **150** (FIG. **12**) are located between the seal hold down plate **90** and the top surface of the aspiration cylinder **82** for each piston **24**. The seal hold down plate **90** is attached to the upper surface of the cylinder block **82** with the respective seals and washers sandwiched therebetween. The cylinder block **82** is preferably machined from aluminum or acetal, although other material may be suitable. The pistons **24** and the main piston drive shaft **22** as well as the plates **84** and **90** are preferably made of stainless steel as is known in the art, and the seals are preferably made of an elastomeric material, as also known in the art, although other materials may be used as well. The embodiment shown in the Figures illustrates a stationary seal **152** arrangement, although for larger volumes, it may be desirable to use a sliding seal arrangement in which a cup seal is attached to the piston. In addition, other suitable sealing arrangements may be used in accordance with the invention, if desired.

A metal chassis **92**, preferably made from sheet metal, is attached to the rear housing **94** for the lower assembly **16**. In particular, the chassis **92** includes a pair of threaded inserts **96** for screwing the chassis **92** to the rear housing **94**. The cylinder block **82** is fixed relative to the housing for the lower assembly **16**, by housing tabs **78** and **80** interfacing with recesses **77** and **70**. The rear housing **94** and the front housing for the lower assembly **16** are connected together using screws that pass through grommets **99** in the housing members. As will be described below in connection with FIGS. **13** and **14**, the lower portion of the cylinder block **82** includes an integral manifold of ports for each of the multiple aspiration cylinders within the cylinder block **82**. While it is preferred that the manifold be integral with the cylinder block **82**, this is not necessary to carry out the invention. A plurality of flexible tubes **98** connect the ports from the aspiration cylinders to ports **100** on the repositionable tip fitting assemblies **32**. The tubes **98** are preferably made of silicone or PVC (ID of 1/16"), and have varying lengths appropriate to accommodate the range of motion of the respective repositionable tip fitting assembly **32**, as will be discussed below. It is important that the seal between the ends of the tubes **98** and the ports from the cylinder block **82**, as well as the ports **100** on the repositionable fittings **32**, be secure and air-tight.

A guide rod assembly **102** for the plurality of repositionable tip fitting assemblies **32** is attached to the chassis **92**. The guide rod assembly **102** preferably has two parallel rods **104**, **106** made of stainless steel. The parallel guide rods **104**, **106** are attached at both ends using a rigid coupler or spacer **108**, **110**. The rigid spacers **108**, **110** maintain the guide rods **104**, **106** precisely spaced during assembly and operation of the pipettor **10**. During assembly, the repositionable tip fitting assemblies **32** are slidably mounted on the two parallel rods **104**, **106**, and then with the rigid spacers **108**, **110** in place, the guide rod assembly **102** is fastened to the lower portion of the chassis **92** using screws **112**, as shown in FIG. **7**. With this configuration, the repositionable fittings **32** are able to move along the rods **104**, **106** such that the lower port **114** for each respective tip mounting shaft **18** has a range of motion traveling along a line parallel to the rods **104** and **106**. In this

manner, each of the tip mounting shafts **18** as well as pipette tips **12** mounted to the shafts **18** remain aligned within a common plane of travel, and also the lower openings in the mounted pipette tips **12** are aligned precisely along a line in order to facilitate aspiration and dispensing of liquid from multiple linearly disposed containers or wells.

The tracked roller drum **30** is also mounted to the chassis **92**, and is parallel to guide rods **104** and **106**. The roller drum **30**, preferably made of acetal, has an outer tracked surface **115**, and rotates over an inner reinforcing axle **31**, FIG. **12**, preferably made of steel or aluminum. Each repositionable fitting **32** includes a vertically extending cam following pin **118** that is seated within one of the respective tracks **120** on the roller drum **30**, as is discussed in more detail with respect to FIG. **12**.

A spur gear **122** is attached to one end of the roller drum **30**. The spur gear **122** on the roller drum **30** is driven by a vertically aligned idler gear **124** and a DC motor output gear **126**. The idler gear **124** is mounted to the chassis **92** using bearing post **128** which has a relatively large head in order to maintain alignment of the idler gear **124**. Although not shown in the drawings, the chassis **94** includes a partial axle which serves to support the DC motor output gear **126** in the proper location. Preferably, the gears **126**, **124** and **122** are vertically aligned in order to allow the lower assembly **16** to maintain a slender profile. Although not preferred, a belt drive mechanism can be used in lieu of a vertical gear train.

Referring now to FIGS. **8**A-**8**C, the miniature DC motor **28** in the lower assembly **16** drives gears **126**, **124** and **122** to rotate the roller drum **30**, thereby repositioning the repositionable tip fitting assemblies **32** to adjust the center-to-center spacing between the pipette tip mounting shafts **18**. In FIG. **8**A, the fitting assemblies **32** are fully spread, which would preferably correspond to a center-to-center spacing of 14.14 mm for an 8-channel pipettor. FIG. **8**B shows an intermediate position for the fitting assemblies **32** which would occur after the motor **28** had rotated the roller drum **30** in a clockwise direction as viewed from the side of the pipettor **10** on which the gears **126**, **124** and **122** are located. FIG. **8**C shows the fittings in a fully tightened position, in winch the center-to-center spacing between the tip mounting shafts **18** is preferably 4.5 mm (or 9 mm depending on the particular embodiment). Note that in the preferred embodiment of the invention, all of the fitting assemblies **32** move when the roller drum **30** is rotated to tighten the spacing or to spread the spacing. However, the relative spacing between the fitting assemblies **32** changes evenly. This is accomplished by designing the tracks **120** appropriately so that linear movement of the fitting assemblies **32** is proportionate to rotation of the drum **30**. It is desirable that the length of the flexible tubing **100** be minimized for each of the channels. For the two outermost channels on either end, fitting assemblies labeled **32**A, **32**B in FIG. **8**B, the port **128**A, **128**B from the respective aspiration cylinder is centered along the range of travel for the fitting assembly **32**A, **32**B. FIGS. **8**A, **8**B and **8**C show dashed line **130** defining the center point of the range of travel for the leftmost repositionable fitting assembly **32**A. The distance represented by arrow **132** in FIG. **8**A is preferably equal to the distance represented by arrow **134** in FIG. **8**C.

Referring to FIG. **9**, the miniature DC gear motor **28** in the lower assembly **16** is mounted to bracket **141** which is in turn mounted to the chassis **92** using screws **140**. A dedicated microprocessor **142** (i.e., a daughter microprocessor) is mounted on a circuit board **138** (which is mounted to the bracket **141**) and controls the operation of the motor **28** in response to instructions from the main microprocessor in the handle assembly **14**. The motor **28** receives power from wires **139** which preferably extend through the circuit board **138** and are soldered to the motor **28** in order to provide additional structural stability. The wires **134** receive power from a ribbon cable (not shown) which runs into the upper handle assembly **14**. The ribbon cable carries power from the battery located in the upper handle portion, and also provides control signals to the daughter board **142**.

An encoder detector **144** (best seen in FIG. **11**) is also mounted to the circuit board **138** and detects the rotation of flag **146** in order to provide indirect feedback as to the position of the roller drum **30**. The RPM output from the miniature gear motor **28** is reduced via cluster gears **148**, and the output shaft is provided to drive gear **126** that is supported in part by the chassis **92**. FIG. **10** shows the preferred vertical alignment of the drive gear **126** with the idler gear **124** and the spur gear **122** at the end of the roller drum **30**. Note that this configuration is especially helpful because it allows the motor **28** to be mounted above the roller drum **30** in a compact manner. FIG. **11** is a detailed view showing the preferred placement of the encoder detector **144** and the encoder flag **146** on the board **138**.

Referring now to FIGS. **9** and **11**, the miniature DC gear motor is preferably a 2.4-volt to 5-volt motor with an output speed of approximately 150 RPM after gear reduction through the cluster gears **148**, such as the type used in video cassette recorders. The output shaft on the motor **28** itself rotates in the range of 14,000-15,000 rpm, and cluster gears **148** provide significant speed reduction. Suitable speed reduction preferably takes three to four sets of cluster gears. An encoder flag **146** is mounted on an intermediate cluster gear, as shown in FIGS. **9** and **11**. In FIGS. **9** and **11**, the flag **146** is mounted on the second cluster gear for rotation. At this gear reduction, the flag **146** rotates 51-53 rotations per the entire span of the roller drum **30**. The encoder sensor **144** is preferably an LED emitter/receiver photo micro detector. More specifically, the preferred emitter/detector is a reflective photo micro detector, EE-SY125 from Omron, which has a 1 mm sensing distance. Preferably, the flag **146** has non-reflective longitudinal sides **147** and reflective ends **149**. In some circumstances, it may not be necessary that the longitudinal sides **147** be non-reflective because those sides are outside of the range of the emitter/receiver **144**. Further, the geometry of the longitudinal sides **147** and the ends **149** can be made concave or convex in order to facilitate accuracy of the detector/flag pair if necessary. The detector **144** counts two reflective ends **149** per rotation, and therefore (in the preferred embodiment) there are roughly 102-106 counts per the full span of the roller drum **30**. The minimum center-to-center positioning for the pipette tips, as shown in FIG. **8**C, is 4.5 mm, which correlates to 31 mm (7×4.5) for an 8-channel pipettor and 49.5 mm for a 12-channel pipettor (11×4.5). The maximum spread, as shown in FIG. **8**A, is a total of 99 mm, which correlates to 14.14 mm center-to-center for an 8-channel pipettor, and 9 mm center-to-center for a 12-channel pipettor. Therefore, the resolution of the encoder **141**,**146** is about 0.3 mm for an 8-channel pipettor and about 0.25 mm for a 12-channel pipettor.

In another embodiment, instead of using flag **146**, the photo detector **144** senses passing gear teeth directly. While the use of an encoder **144**,**146** is the preferred mechanism for sensing the location of the repositionable tip fittings **32**, other methods can be used as well. For example, mechanical stops can be set at inner and outer positions, or electric switches can be used to detect user settable positions. Also, if desired the pipettor can include a visual scale for pipette tip positioning.

FIG. **12** illustrates a cross-section along, one of the air flow passageways for a channel in the lower assembly **16**. For the

channel shown, FIG. **12** shows a piston **24** depending from the piston drive plate **83** and extending into an aspiration cylinder **154** in the cylinder block **82**. A washer **150** and seal **152** are held down by seal hold down plate **90**, as previously described. Cylinder block **82**, preferably machined from aluminum or acetal as previously mentioned, includes an L-shaped channel **156** at the lower end of each cylinder **154**. Each channel **156** has a circular diameter adapted to receive a rigid tube **158**. The rigid tube **158** shown in FIG. **12** extends forward to form a port for the flexible tube **98**. One end of the flexible tube **98** is mounted over the port **158** for the cylinder **154**, and the other end of the flexible tube **98** is mounted to a port **100** on the repositionable fitting **32**. As mentioned, the flexible tubing **98** is preferably silicone flexible tubing or PVC having a nominal inside diameter of 1/16", although other types of tubing can be used.

The repositionable tip fitting assembly **32** preferably includes several parts, namely a main body **160**, an air transport tube **162**, a cam following pin **118**, and a pipette tip mounting shaft **18**. The repositionable tip fitting assembly **32** is preferably molded from acetal filled with a lubricant like PTFE (polytetrafluoroethylene). The openings for guide rods **104** and **106** are integrally molded into the fitting body **160** as is the cam following pin **118** extending upward from the main body **160**. In addition, the transport tube **162** is insert molded within the main body **160** and passes between the openings for the guide rods **104** and **106**. Since the tolerance for the openings for the guide rods **104** and **106** is critical for smooth repositioning of the tip fitting assembly **32**, it may be desirable to machine the openings although this should not normally be necessary. In addition, as shown in FIG. **8**C for example, the width of the body **160** for the tip fitting, assemblies **32** is preferably chosen to be as wide as possible in order to provide suitable side-to-side stability, but cannot be wider than the selected minimum value for the center-to-center distance for the pipette tip mounting shafts **18**, namely 4.5 mm in the preferred embodiment shown in the Figures (or preferably 9 mm in other embodiments). In a preferred embodiment showing an 8-channel pipettor, the width of the body portion **160** of the tip fitting assemblies **32** is preferably 4.5 mm. Those skilled in the art will understand that 8-channel pipettors can have other widths such as 9 mm. The opening for guide rod **104** is located forward of and lower than the opening for guide rod **106**. Preferably as shown, the mounting shaft **18** is mounted to the main body **160** along a longitudinal axis which passes between the openings for the guide rods **104** and **106**. The cam following pin **118** is also preferably located on this axis. The transport tube **162** is bent, preferably at a 40° angle so that the port **100** on the assembly **32** extends upward at a convenient angle to receive the flexible tube **98**. More specifically, it is desirable that the port **100** be in an orientation that is at or near tangent to the roller drum surface **30**, such as 40°. As shown for example in FIGS. **6** and **7**, the ports **100** defined by the bent transport tube **162** preferably face in the forward direction, albeit at a 40° angle. The transport tube **162** is preferably made of solvent resistant material such as stainless steel tubing having an OD of 1/16". The mounting shaft **18** is preferably made of machined or molded metal or polymer (e.g. PEEK) and attached over the downward extending leg of the bent transport tube **162**, preferably via press fit although it may be necessary to use adhesive in some circumstances.

The preferred configuration for the pipette mounting shaft **18** is disclosed in copending patent application Ser. No. 11/552,384, entitled "Locking Pipette Tip And Mounting Shaft", by Gregory Mathus, Terrence Kelly and Richard Cote, filed on Oct. 24, 2006, assigned to the assignee of the present application and incorporated herein by reference, and Ser. No. 11/934,381, entitled "Locking Pipette Tip And Mounting Shaft", Gregory Mathus, Terrence Kelly and Richard Cote, filed on Nov. 2, 2007, assigned to the assignee of the present application and incorporated herein by reference.

The roller drum **30** is mounted over a rigid axle **31**. The axle **31** is preferably a steel or aluminum rod, or it can be made of plastic such as acetal. The axle **31** is stationary and is attached to the chassis **92** using screws **95**, FIG. **7**. The roller drum **30** is preferably machined, as mentioned from a rod of lubricious material such as acetal, in order to cut the grooves **120** and the center bore, as well as preferably a hex fitting for the spur gear **122**. The spur gear **122** is press fit onto the machined hex fitting so that the roller drum **30** rotates in sync with the spur gear **122**. It is desired that the bore through the roller drum **30** provides slight clearance around the stationary support axle **31**. Preferably, each end of the bore also has slight indentions machined therein to receive press fit brass bushings (not shown) in order to extend the wearability of the roller drum **30**. The grooves **120** are also machined at a depth to provide slight clearance with respect to the top surface of the cam following pins **118** on the repositionable tip fitting assemblies **32**. In this manner, the lubricity of the acetal components provides smooth, relatively frictionless movement when adjusting and readjusting the position of the tip fitting assemblies **32**. However, when the user is mounting pipette tips, the upward force on the mounting shafts **18** and hence the guide rods **104**, **106** is reinforced by the stationary axle **31** after a small amount of upward displacement, thereby protecting the guide rods **104** and **106** from permanent distortion and providing necessary rigidity for mounting the pipette tips.

Referring now to FIGS. **13** and **14**, the manifolding from the cylinder block **82** to the flexible tubes **98** consist of machined outlet passageways **156** in the cylinder block **82** as well as rigid stainless steel tubing **158**A, **158**B, **158**C, **158**D. The rigid tubing **158**A, **158**B, **158**C, **158**D is configured, as mentioned above, in order to reduce the overall required length of flexible tubing **98** and to coordinate and organize the orientation of the flexible tubing **98** for all positions of the repositionable fitting assemblies **32** in this regard, it is desirable to locate the ports **158**A, **158**B for the outer mounting shafts and fittings **32**A, **32**B FIG. **8**B at or near the center of the range of travel for those tip fitting assemblies **32**A, **32**B as described previously with respect to FIGS. **8**A-**8**C. The rigid tubing **158**A, **158**B for the outer mounting shafts and fittings **32**A, **32**B should exit the cylinder block **82** towards the rear of the pipettor, as shown in FIGS. **13** and **14**, in order to provide the desirable spread of attachment locations for the flexible tubing **98** without having any crossover between rigid tubes **158**A, **158**B, **158**C, **158**D or flexible tubes **98**. The contour of the lower portion of the cylinder block **82** is machined in order to provide proper clearance for rigid tubes **158**A, **158**B, **158**C, **158**D as well as clearance for attachment of flexible tubing **98**, particularly with respect to rigid tubes **158**C and **158**D. The outlets for the tubes **158**A, **158**B preferably face perpendicularly forward, whereas the outlets for the rigid tubes **158**C, **158**D preferably face slightly outward. All of the outlets for the rigid tubing **158**A, **158**B, **158**C, **158**D preferably lie in a horizontal plane, as shown in FIGS. **12**-**14**. It has been found that this orientation along with the 40° or tangent orientation of the port **100** on the repositionable fitting assembly **32** provides effective and manageable attachment for each of the flexible tubes **98**, without pinching and without excessive tubing **98**. For example, the tubing **98** for the outer fitting assemblies **32**A, **32**B is long enough to comfortably reach between its outermost location, FIG. **8**A, and its innermost location, FIG. **8**C, without creating too much bunching at the

intermediate position, FIG. **8**B. On the other hand, tubes **158**C, **158**D must be mounted at an angle in order to extend forward without interfering with the outlet ports **156** for the tubes **158**A, **158**B. The tubing **98** for the inner fittings **32**C, **32**D is shorter, and therefore it is not necessary for the outlets for the rigid tubing **158**C, **158**D to point straight forward. As mentioned previously, it is desirable that the flexible tubing **98** be free to move without obstruction, however, it is also desirable that the flexible tubing **98** not extend too far in front of or beyond the drum **30**. Therefore, it is desirable that the outlets for the rigid tubes **158**A, **158**B, **158**C, **158**D be suitably placed rearward of the front surface of the cylinder block **82** in order to provide room for the flexible tubing **98** to attach and bend naturally within the confines of the housing. The configuration of rigid tubes **158**A, **158**B, **158**C, **158**D shown in FIGS. **13** and **14** provides this advantage.

Referring now to FIGS. **15**A-**15**F, the pipettor **10** preferably operates using menu driven software which is programmable by the user, as mentioned substantially in accordance with the system described in copending and incorporated U.S. patent application Ser. No. 11/856,232, entitled "Pipettor Software Interface". The menu driven software is, however, modified preferably in accordance with the description below with respect to FIGS. **15**A-**15**F in order to accommodate a pipettor with repositionable tip fitting assemblies **32**. Reference should be made to the above mentioned copending patent application as well as copending and incorporated patent application Ser. No. 11/856,231 entitled "Electronic Pipettor Assembly", for the overall operation of the pipettor and the programmable interface. Briefly, referring to FIG. **1**, in the preferred embodiment, the front side of the pipettor **10** includes a touchpad control **170**, a run button **172**, and a user interface display **174**. The touchpad control **170** and the run button **172** can be conveniently operated by the thumb of a user in order to program and operate the pipettor **10**. Generally speaking, menus displayed on the user interface display **174** are navigated using the touchpad control **170**, which includes the ability to translate relative rotational movement of a finger or thumb into up and down scrolling movements on the display screen **174**, and also provides right and left navigation buttons **171**,**173**, a "purge" button **175**, a "go back" button **177**, and a center enter or "OK" button **179**, all as described in the above mentioned copending patent application Ser. No. 11/856,232 entitled "Pipettor Software Interface".

FIG. **15**A illustrates the preferred main menu screen **180**, which has been modified to provide an additional menu selection **182** for programming the tip spacing. When the user selects the tip spacing **182** from the main menu **180**, the tip spacing programming screen **184**B in FIG. **15**B appears on the user interface display **174**. Tip spacing screen **184**B in FIG. **15**B contains several prompts, the first being the number of positions, as indicated by reference numeral **186**. Preferably, the software allows the user to select, whether to program set center to center spacing for either two positions or three positions. Two positions, namely "first" and "last", would typically be selected in the case where the user wishes to aspirate from a series of containers having a first center-to-center spacing, for example 4.5 mm, and to dispense into a series of containers having a second center-to-center spacing such as 9 mm. Preferably, a third position, namely "middle", is also offered in situations where the user would like to aspirate, dispense, or mount or eject the tips in a position different from the first and last positions. FIG. **15**B shows that the user has selected that the number of positions be three, and the screen illustrates prompts for the first, middle and last positions, as illustrated by reference numbers **188**, **190** and **192**. The prompt labeled "POSITION" indicated by reference numeral **194** displays the current center to center distance. Referring to FIG. **15**C, the tip spacing screen **184**C shows that the user has selected to program two positions as represented by the number 2 in the highlighted box adjacent the prompt **186** for the number of positions. If the user is satisfied with the programming for the distances for the first and last positions, the user can save these distances by hitting the right navigation button **171** on the touch pad control, as indicated by icon **196**. Otherwise, the user can use the touchpad control to navigate the menu as shown in FIG. **15**D. In FIG. **15**D, the user has highlighted the first position prompt **188**, and has adjusted the position to 4.9 mm, as indicated by the value adjacent the position prompt **194**. The "open" icon **198** indicates that the user can increase the programmed position distance using the right navigation button **171** on the touchpad control, whereas the "close" icon **200** indicates that the user can decrease the center-to-center distance by using the left navigation button **173** on the touchpad control. The tip spacing programming menu **184**E shown in FIG. **15**E shows that the user has reprogrammed the distance adjacent to the first position prompt **188**. As mentioned, the user can save this setup by hitting the right navigation button **171** on the touchpad control, as indicted by the save prompt **196**. The last distance can be programmed in the same manner as described, and if three positions were chosen, the same is true for the middle distance as well. The tips are physically moving when the open and close buttons **198**, **200** are pressed. This feature allows the operator to measure by eye the desired spacing. At the same time, the precise spacing distance will be displayed on the screen.

FIG. **15**F shows a run menu **202** for running a pipette procedure "PIPET" as described in the above copending patent application Ser. No. 11/856,232, entitled "Pipettor Software Interface" on the pipettor **10** disclosed herein having repositionable pipette tip mounting shafts. Note that for this procedure, as shown in FIG. **15**F, it is preferable to aspirate at one center-to-center distance, i.e. the first programmed distance **188**, namely 4.9 mm in this example, and dispense at the last programmed distance **192**, i.e. 14.1 mm as shown in this example. Before the user presses the run button **172** on the touch pad control to aspirate, the user would press the left navigation button **173** on the touch pad control to reposition the pipette tips at 4.5 mm center to center spacing. After aspiration, the user would they press the right navigation button **171** on the touch pad control to reposition the pipette tips at 14.1 mm spacing before pressing the run button **172** to dispense in the next step. In FIG. **15**F, the next step in the procedure is to aspirate 125.0 μL, and the first distance of 4.9 mm distance is highlighted at the bottom of the screen. Because the operator desires to aspirate at the first position of 4.9 mm, the user will place the pipette tips in the sample wells to be aspirated. After aspiration, the operator will press the right navigation button **171** to reposition the pipette tips in the last position of **141** prior to the dispensing step.

We claim:

1. A hand-held, electronic multi-channel pipettor comprising:

multiple aspiration cylinders and a plurality of repositionable pipette tip fitting assemblies, wherein each tip fitting assembly has a pipette tip mounting shaft;

a plurality of flexible tubes that connect ports on the aspiration cylinders to ports on the repositionable pipette tip fittings;

a handle portion and a lower portion;

a first motor for controlling the movement of pistons within the multiple aspiration cylinders;

a second motor in the lower portion for adjusting the centerline spacing between the mounting shafts;

a user interface located on the handle portion of the pipettor;

one or more microprocessors configured to control operation of the second motor; and

software that programs the one or more microprocessor to operate the second motor to position and reposition the repositionable tip fitting assemblies in response to inputs on the user interface.

2. A hand-held, electronic multi-channel pipettor as recited in claim **1** wherein the software is configured to set at least two desired tip spacing settings at distances greater than or equal to a minimum tip spacing distance and less than or equal to a maximum tip spacing distance, and the desired tip spacing settings are set by selecting the desired spacing on the user interface.

3. A hand-held, electronic multi-channel pipettor as recited in claim **2** wherein the second motor has an output shaft that rotates in response to an input on the user interface to move the repositionable pipette tip fitting assemblies to a selected one of the desired tip spacing settings and the pipettor further comprises means for transmitting rotation of the output shaft from the second motor into movement of the repositionable pipette tip fitting assemblies to adjust the centerline spacing between the mounting shafts in accordance with the selected one of the desired tip spacing settings.

4. A hand-held electronic multi-channel pipettor as recited in claim **3** wherein the repositionable pipette tip fitting assemblies are slidably mounted to a pair of parallel rods.

5. A hand-held, electronic multi-channel pipettor as recited in claim **3** further comprising an encoder that provides a signal regarding the position of the repositionable pipette tip fitting assemblies to the one or more microprocessor within the pipettor.

6. A hand-held electronic multi-channel pipettor as recited in claim **1** wherein the user interface on the hand-held pipettor comprises on the handle portion a display, a touch pad control and a run button.

7. A hand-held electronic multi-channel pipettor as recited in claim **6** wherein the touch pad control includes a circular touch pad in which rotational movements of a thumb or finger translate in cursor movements on the display.

8. A hand-held electronic multi-channel pipettor as recited in claim **7** wherein the user interface on the hand-held pipettor further comprises at least one navigation button for entering inputs on the user interface to position and reposition the repositionable tip fitting assemblies.

9. A hand-held electronic multi-channel pipettor as recited in claim **8** wherein the user interface on the hand-held pipettor further comprises a run button for operating the first motor to control the movement of pistons within the multiple aspiration cylinders in order to aspirate liquid into disposable pipette tips mounted on the mounting shafts or dispense liquid from the disposable pipette tips.

* * * * *