US009470207B2

(12) **United States Patent**
Calverley

(10) **Patent No.: US 9,470,207 B2**
(45) **Date of Patent: Oct. 18, 2016**

(54) **GYROGLIDER POWER-GENERATION, CONTROL APPARATUS AND METHOD**

(71) Applicant: **Grant Howard Calverley**, Friday Harbor, WA (US)

(72) Inventor: **Grant Howard Calverley**, Friday Harbor, WA (US)

(*) Notice: Subject to any disclaimer, the term of this patent is extended or adjusted under 35 U.S.C. 154(b) by 122 days.

(21) Appl. No.: **14/548,815**

(22) Filed: **Nov. 20, 2014**

(65) **Prior Publication Data**

US 2016/0208778 A1 Jul. 21, 2016

Related U.S. Application Data

(60) Division of application No. 12/907,967, filed on Oct. 19, 2010, now Pat. No. 8,894,001, which is a continuation-in-part of application No. 12/792,203, filed on Jun. 2, 2010.

(Continued)

(51) **Int. Cl.**

F03D 5/00	(2006.01)
B64C 39/02	(2006.01)
B64C 27/02	(2006.01)

(Continued)

(52) **U.S. Cl.**

CPC ***F03D 5/00*** (2013.01); ***B64C 27/02*** (2013.01); ***B64C 39/022*** (2013.01); ***F03D 7/00*** (2013.01); ***F03D 11/04*** (2013.01)

(58) **Field of Classification Search**

CPC F03D 5/00; F03D 7/00; F03D 9/002; F03D 11/04; B64C 27/02; B64C 39/022

See application file for complete search history.

(56) **References Cited**

U.S. PATENT DOCUMENTS

3,987,987 A *	10/1976	Payne	.....	B64C 39/022 244/153 R
5,301,900 A	4/1994	Groen		
6,254,034 B1 *	7/2001	Carpenter	.....	A63H 27/08 244/153 R

(Continued)

FOREIGN PATENT DOCUMENTS

RU	68145 U1	11/2007
WO	2007141795 A1	12/2007

(Continued)

OTHER PUBLICATIONS

Amelin K.S. et al. Adaptativnoe upravlenie avtonomnoy gruppoy bespilotnykh 1-14letatelnykh apparatov. Naychny zhumal "Stokhasticheskaya optimizatsiya vinformatike" ISSN 2226-3772 (online), ISSN 1992-2922 (Print), Tom 5, 2009,[retrieved on Oct. 7, 2013] Retrieved from the Internet:<URL:http://www.math.spbu.ru/user/gran/optstoch.htm>.

(Continued)

Primary Examiner — Valentina Xavier

(57) **ABSTRACT**

A power generation apparatus and method comprises at least one gyroglider rotary wing flying at an altitude above the nap of the earth. A strong and flexible tether, connected to the gyroglider frame is pulled with a force generated by the rotary wing. The force is transmitted to a ground station that converts the comparatively linear motion of the tether being pulled upward with a lifting force. The linear motion is transferred to a rotary motion at the ground station to rotate an electrical generator. The tether is retrieved and re-coiled about a drum by controlling the gyroglider to fly down at a speed and lift force that permit recovery of the gyroglider at a substantially reduced amount of retrieval force compared to the lifting force during payout of the tether. Thus, the net difference in force results in a net gain of energy.

2 Claims, 27 Drawing Sheets

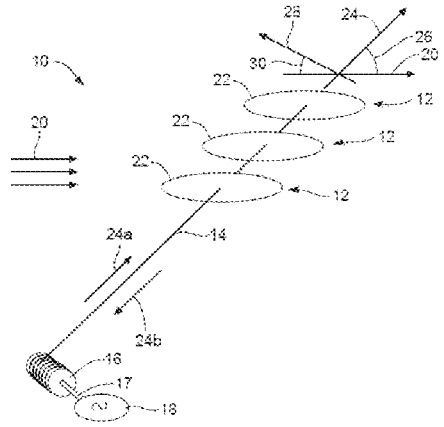

Related U.S. Application Data

(60) Provisional application No. 61/183,901, filed on Jun. 3, 2009, provisional application No. 61/253,925, filed on Oct. 22, 2009, provisional application No. 61/404,149, filed on Sep. 27, 2010.

(51) **Int. Cl.**
F03D 11/04 (2006.01)
F03D 7/00 (2006.01)

(56) **References Cited**

U.S. PATENT DOCUMENTS

7,109,598	B2	9/2006	Roberts	
7,275,719	B2 *	10/2007	Olson	F03D 5/04 244/153 R
7,656,053	B2	2/2010	Griffith	
8,922,046	B2	12/2014	VanderLind	
2005/0046197	A1 *	3/2005	Kingsley	F03D 5/00 290/55
2007/0176432	A1 *	8/2007	Rolt	B64C 39/022 290/55
2008/0210826	A1	9/2008	Ockels	
2010/0230546	A1 *	9/2010	Bevirt	F03D 5/00 244/175
2011/0025061	A1	2/2011	Roberts	
2011/0266809	A1	11/2011	Calverley	
2013/0140827	A1 *	6/2013	Carroll	B64C 39/022 290/55
2013/0154275	A1	6/2013	Calverley	
2015/0039161	A1	2/2015	Hastings	
2016/0032895	A1 *	2/2016	Weddendorf	F03D 5/00 244/17.23

FOREIGN PATENT DOCUMENTS

WO	2009126988	A1	10/2009
WO	2011087541	A2	7/2011

OTHER PUBLICATIONS

Zhdanov A.A. Adapininye mashiny—neizbezhnoe napravlenie razvitiya tekhniki. 1-14Zadachi i problemy. XII Vserossiyskaya nauchno-tekhnicheskaya konferentsiya“Neiroinformatika—2010”: Lektsiya po neiroinformatike.—M.: NIYAU MIFI, 2010,pp. 162-211.

* cited by examiner

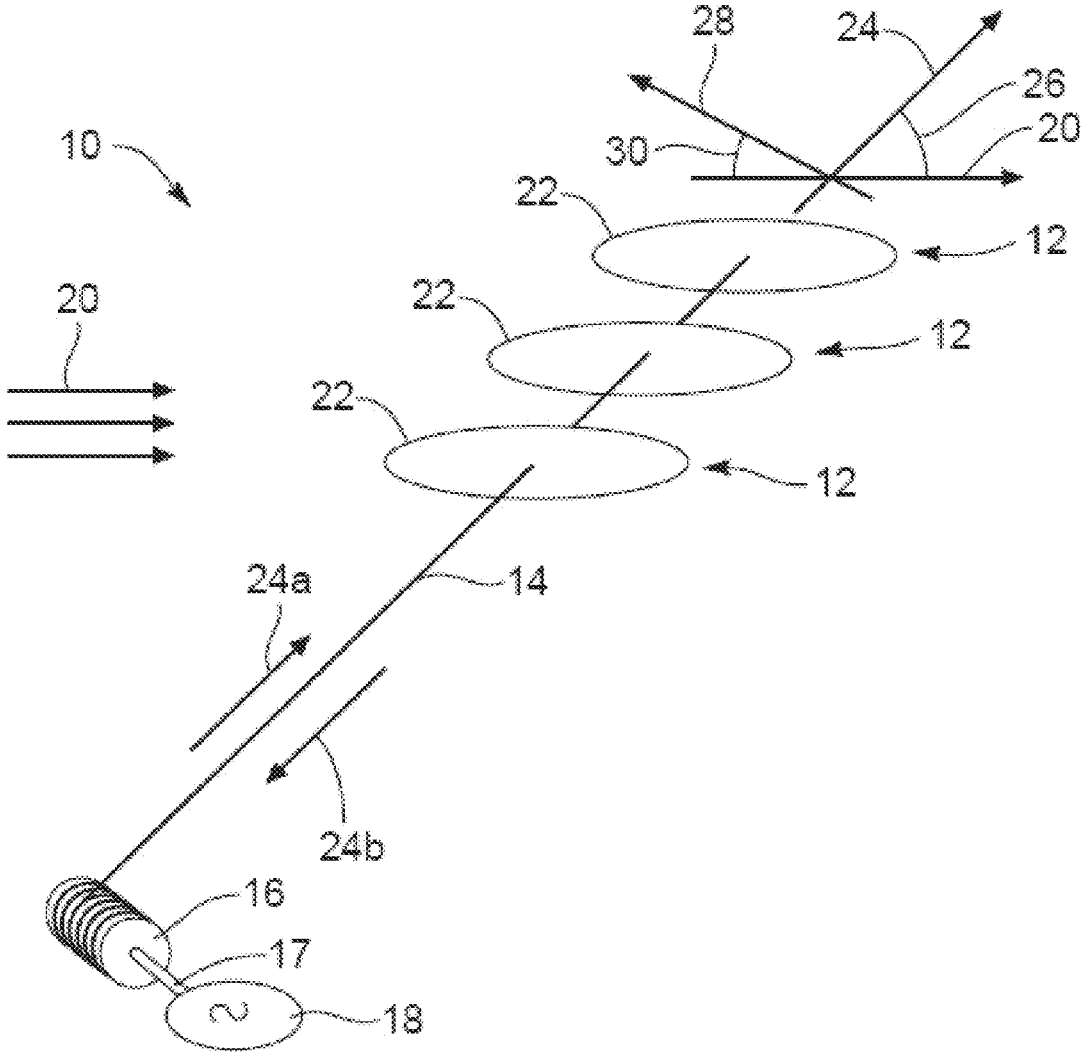

FIGURE 1

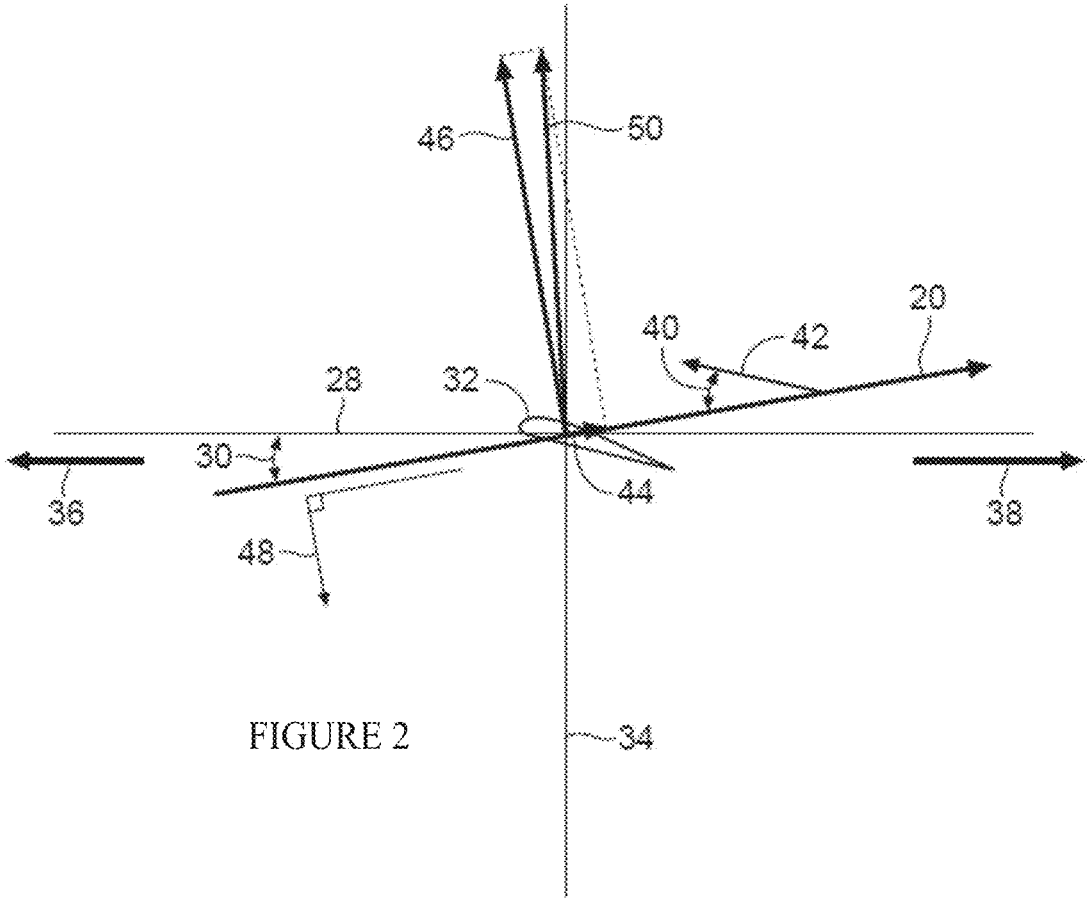

FIGURE 2

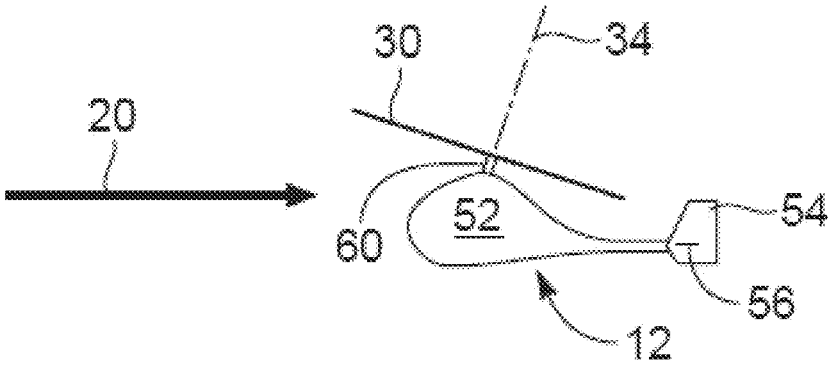

FIGURE 3

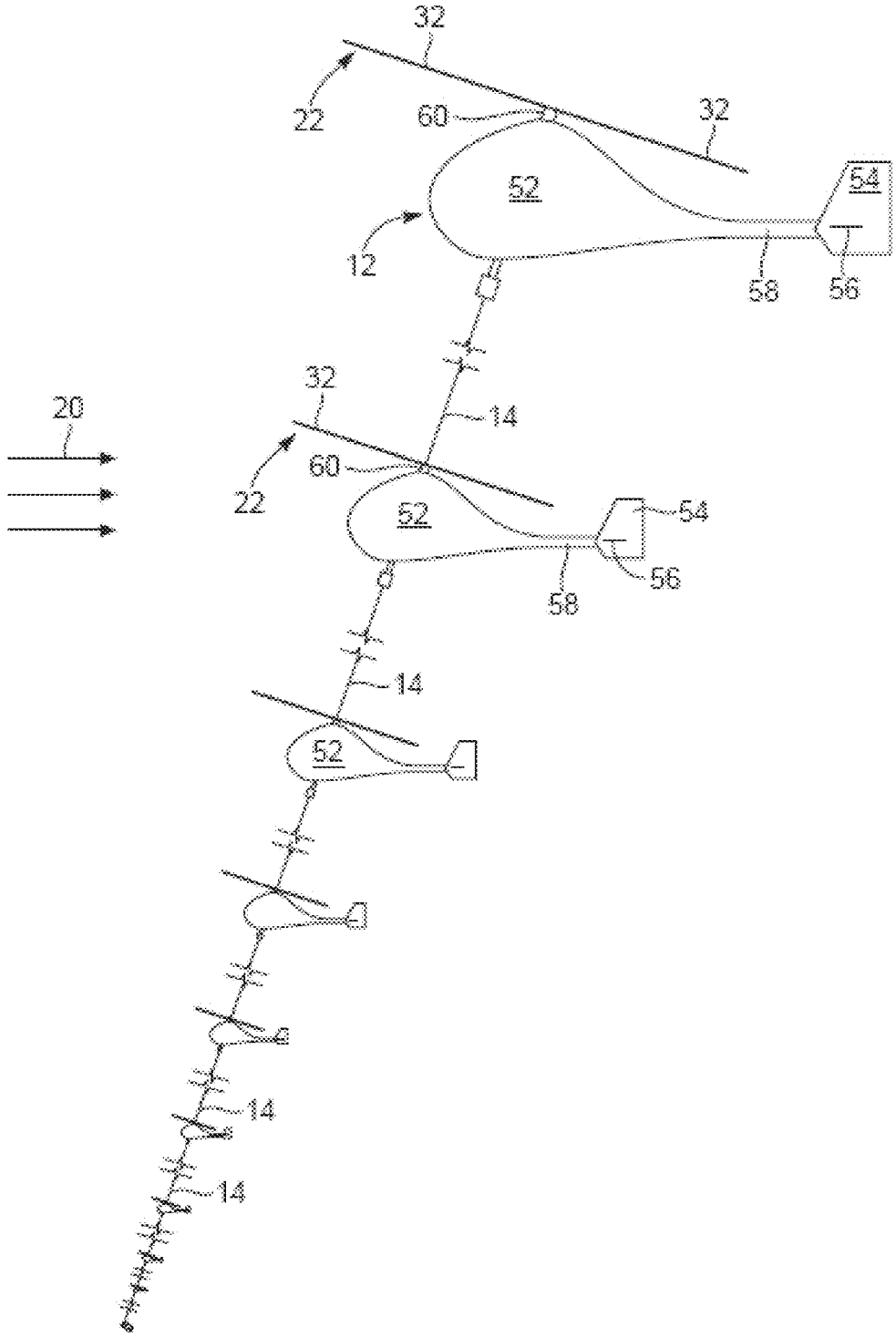

FIGURE 4

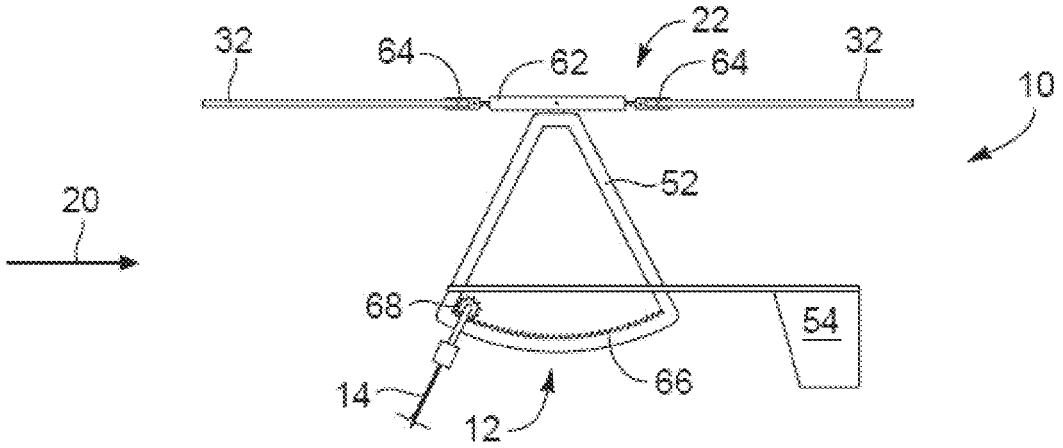

FIGURE 5A

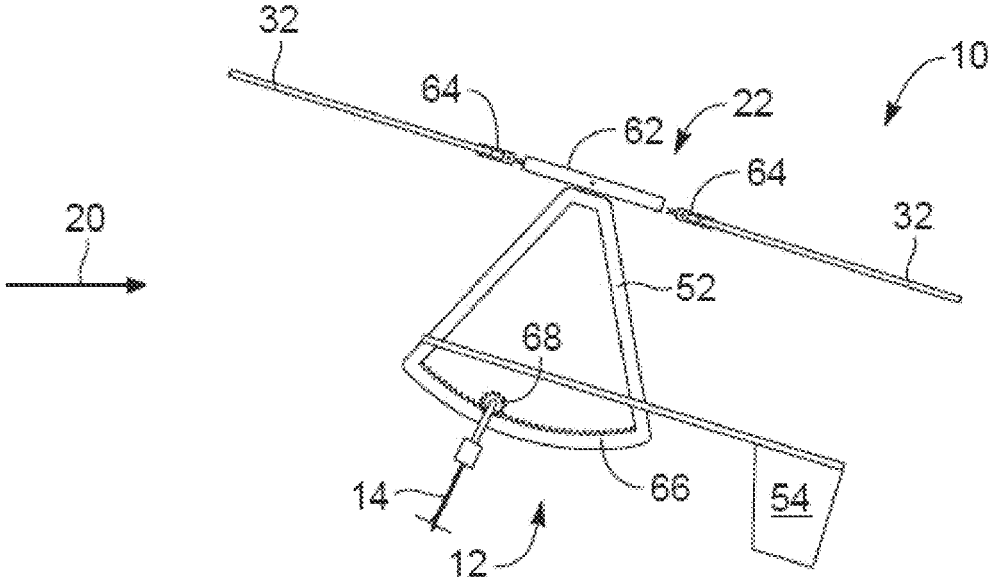

FIGURE 5B

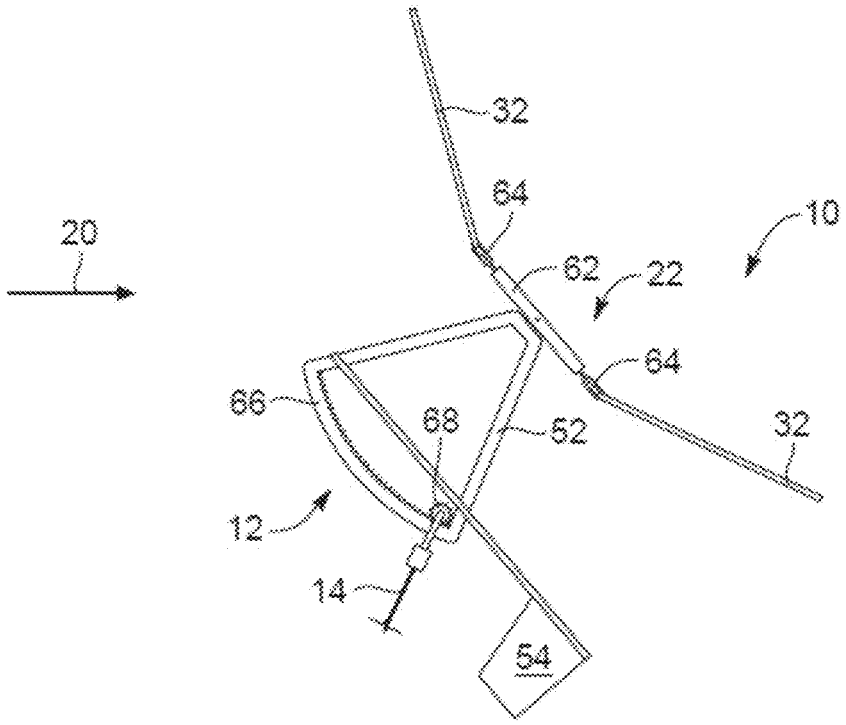

FIGURE 5C

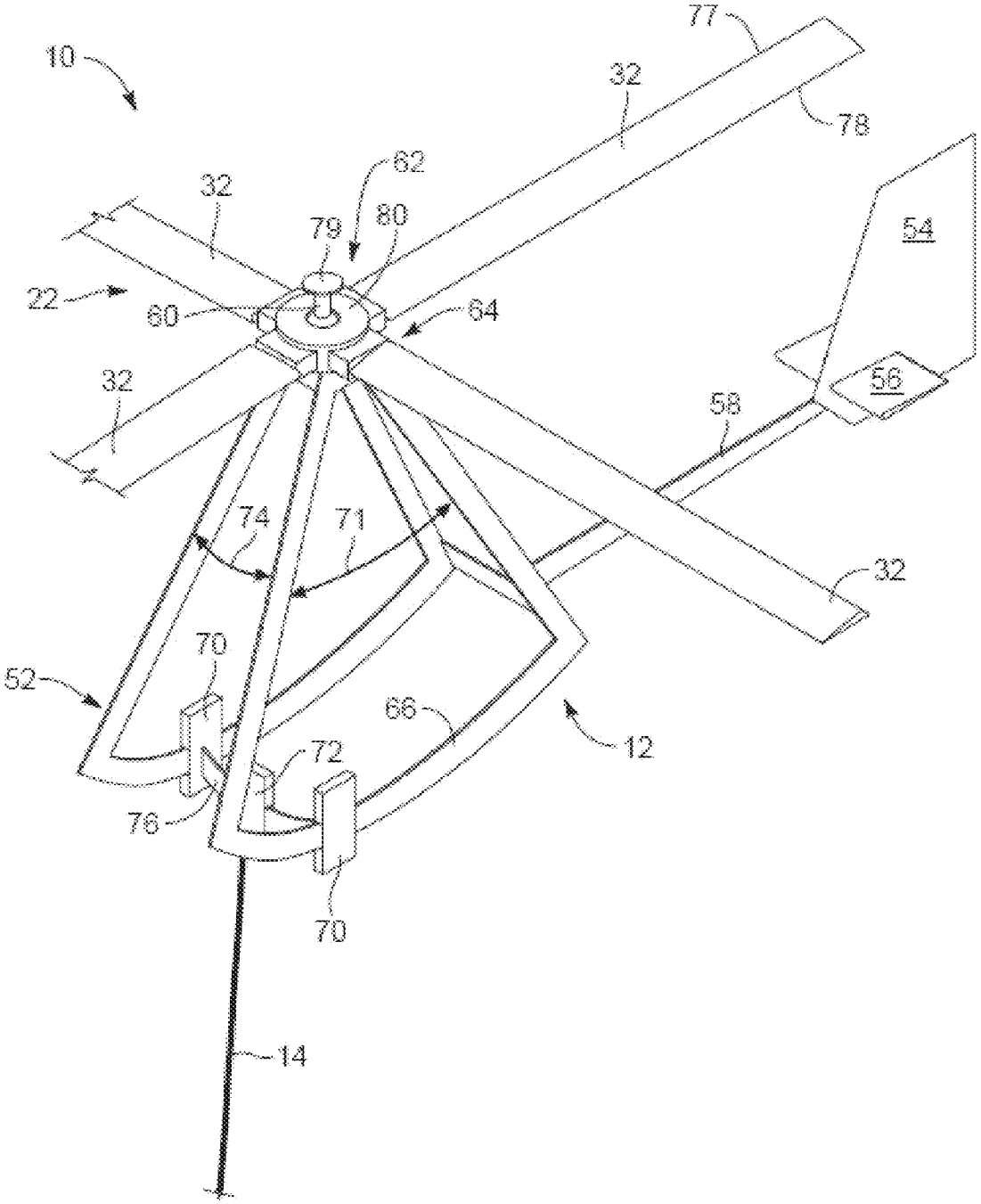
10
77
32
78
62
32
79
80
54
22
60
64
56
32
58
74
71
32
70
52
66
12
72
76
70
14

FIGURE 6

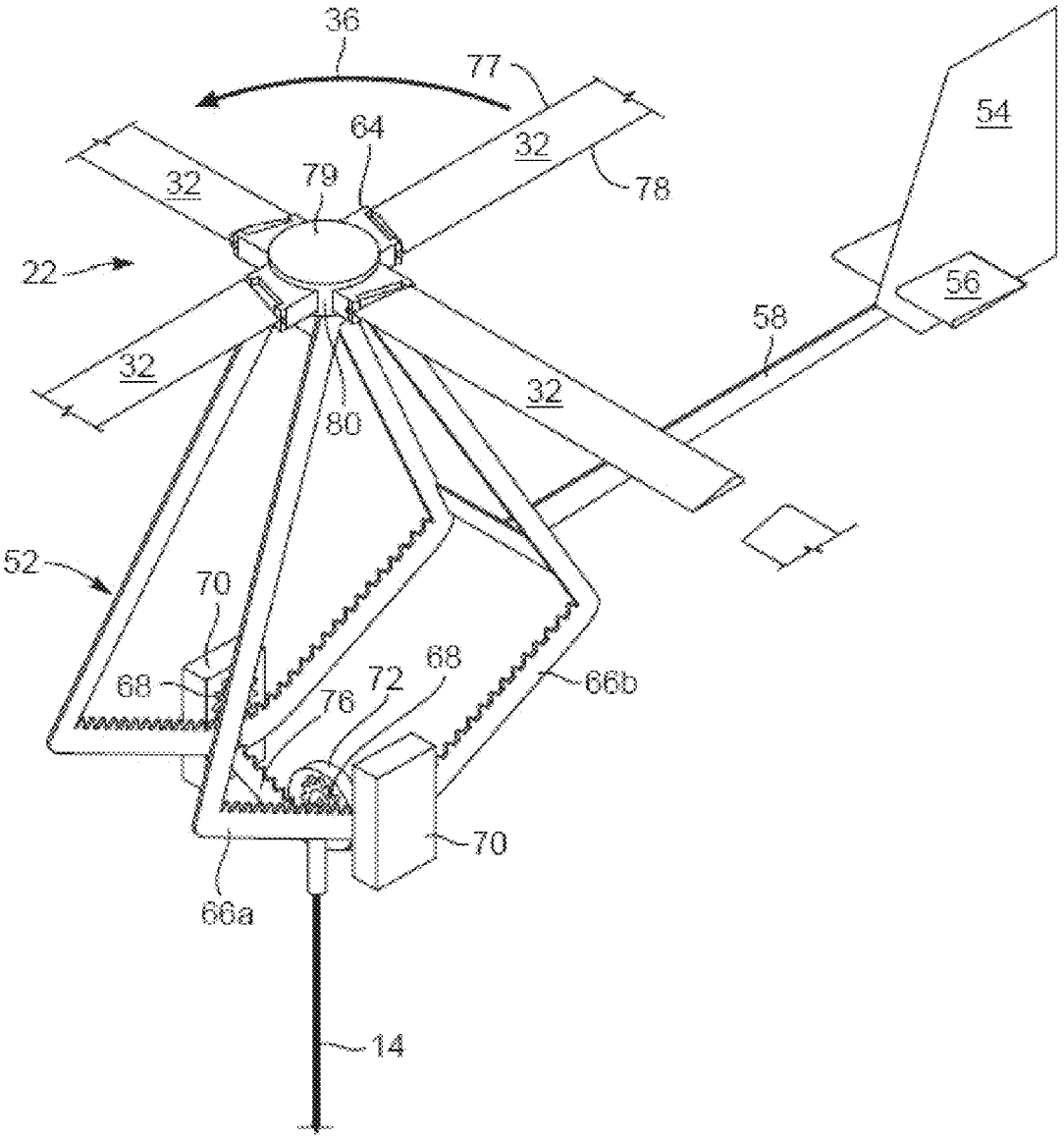

FIGURE 7

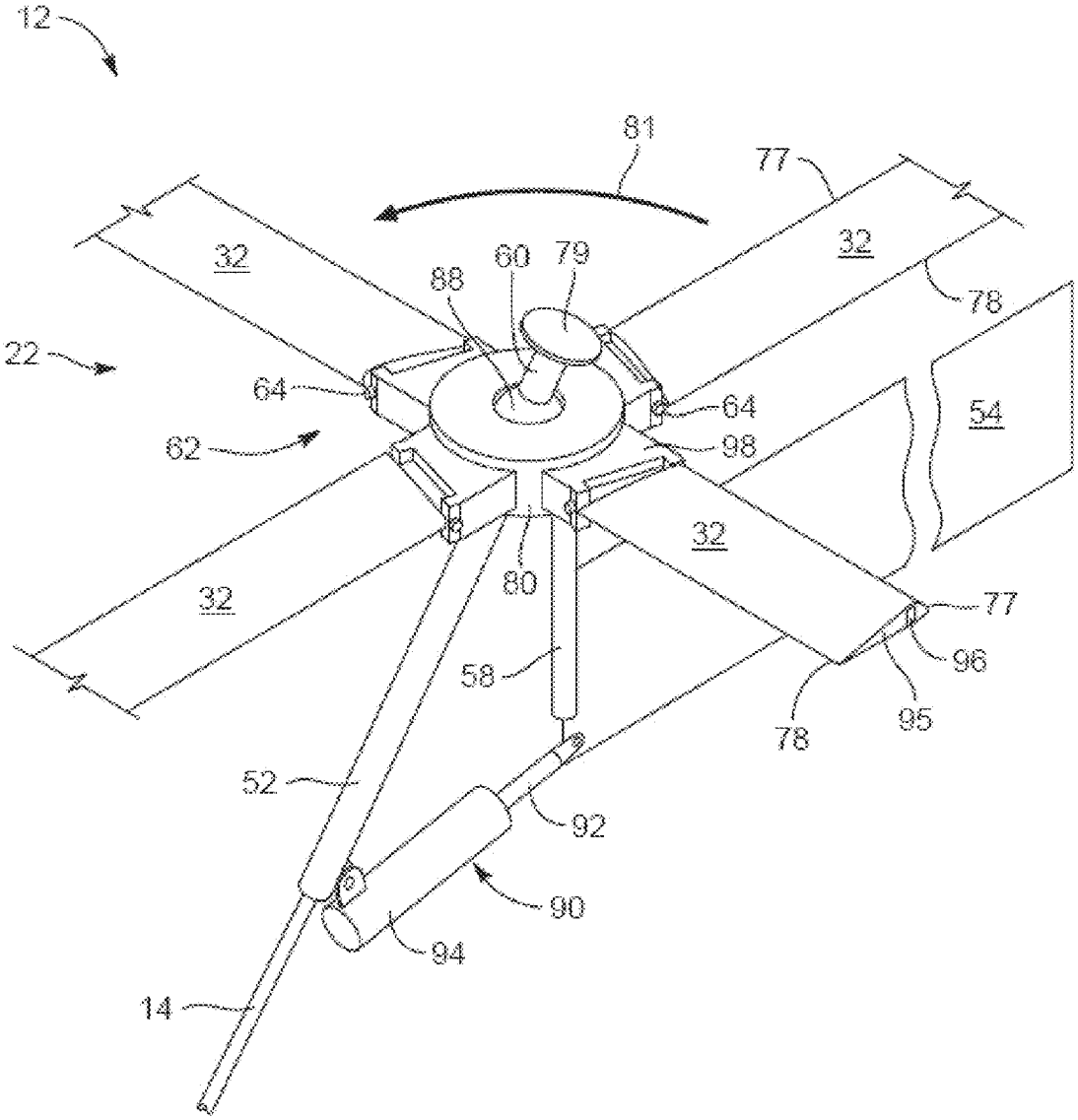
12
81
77
32
32
60
79
88
78
22
64
64
54
62
98
32
32
80
77
96
58
95
78
52
92
90
94
14

FIGURE 8

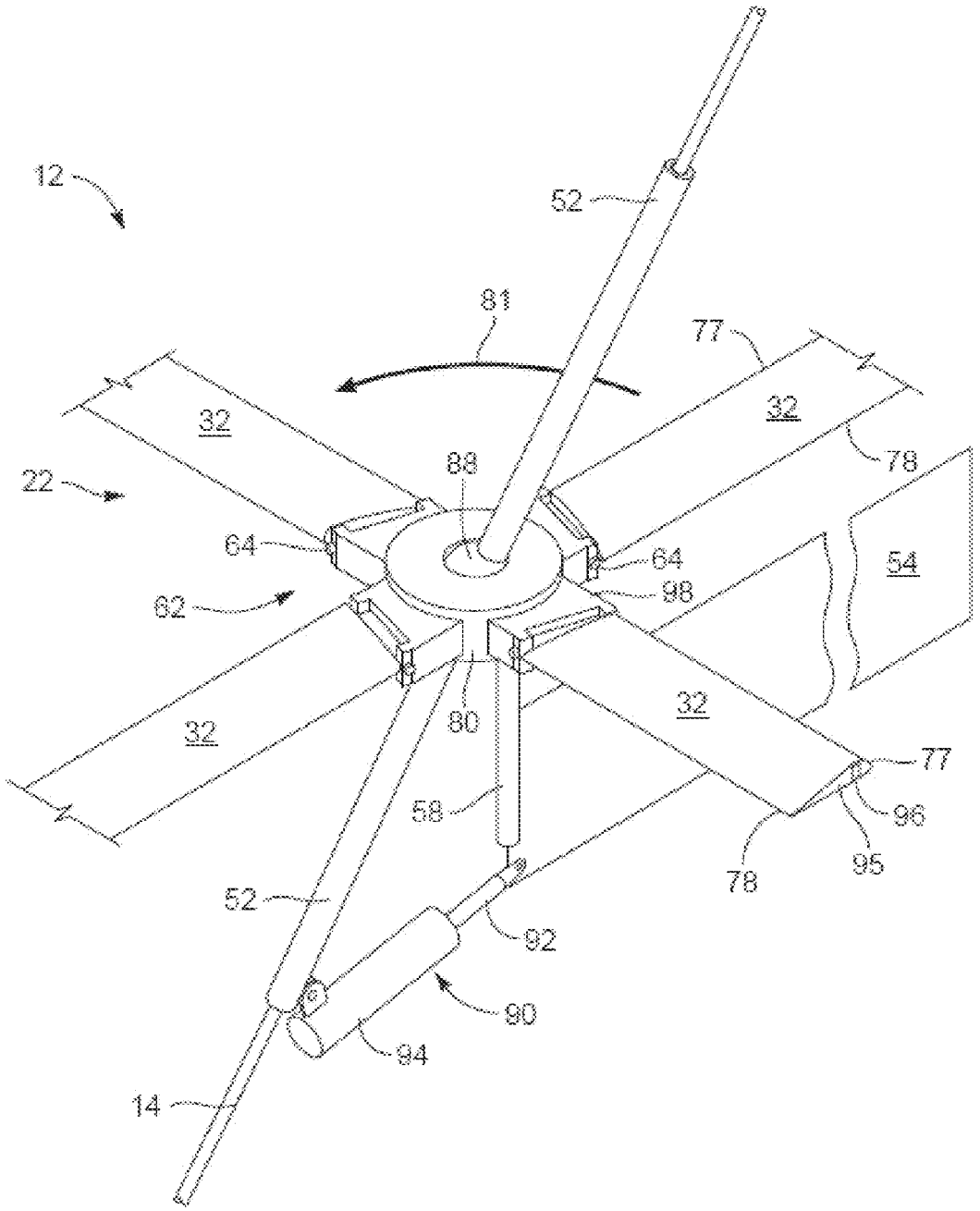
12
52
81
77
32
32
78
22
88
64
64
54
62
98
32
32
80
77
58
96
95
78
52
92
90
94
14

FIGURE 9

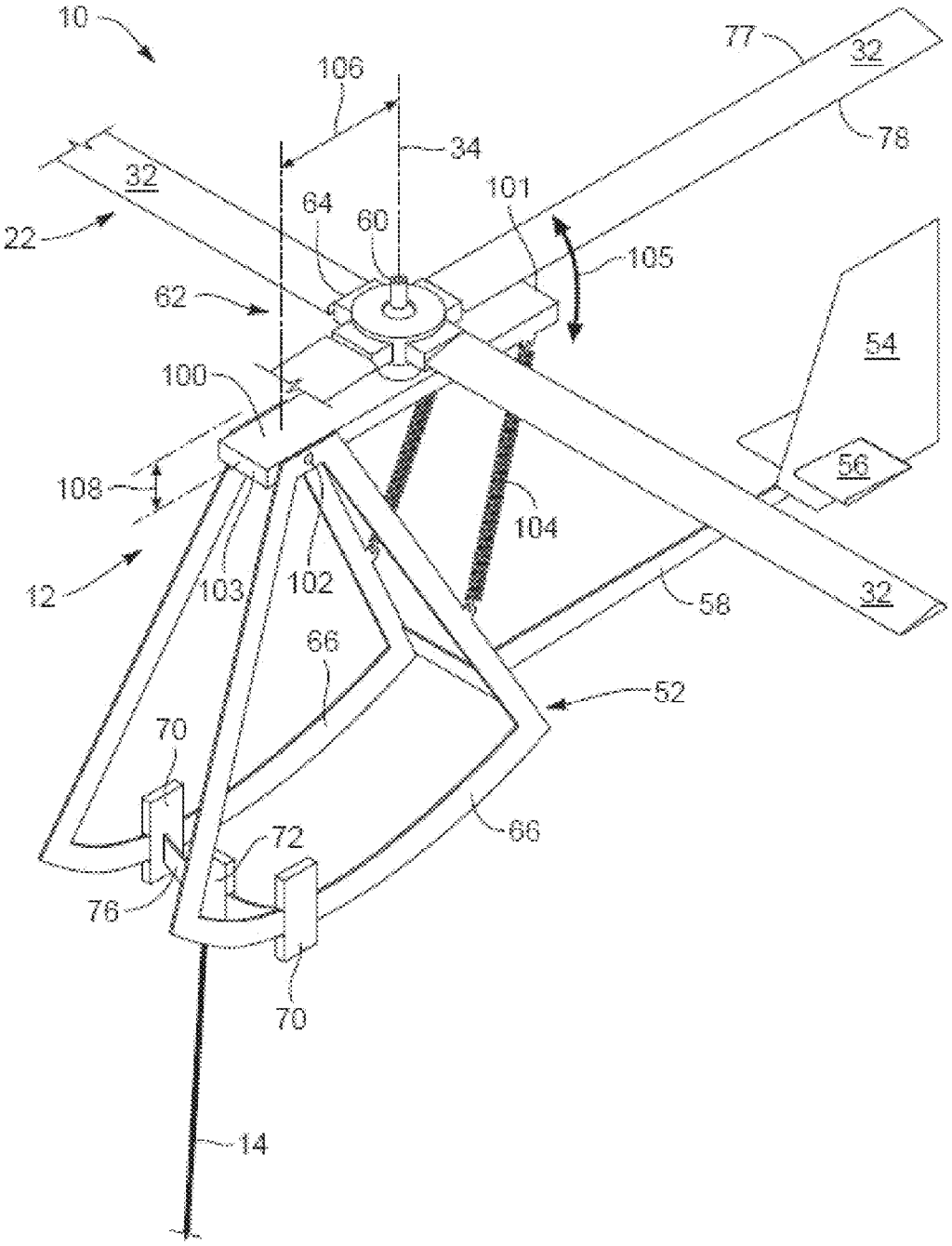
10
106
34
77
32
78
32
22
64
60
101
105
62
54
100
56
108
104
12
103
102
58
32
66
52
70
66
72
76
70
14

FIGURE 10

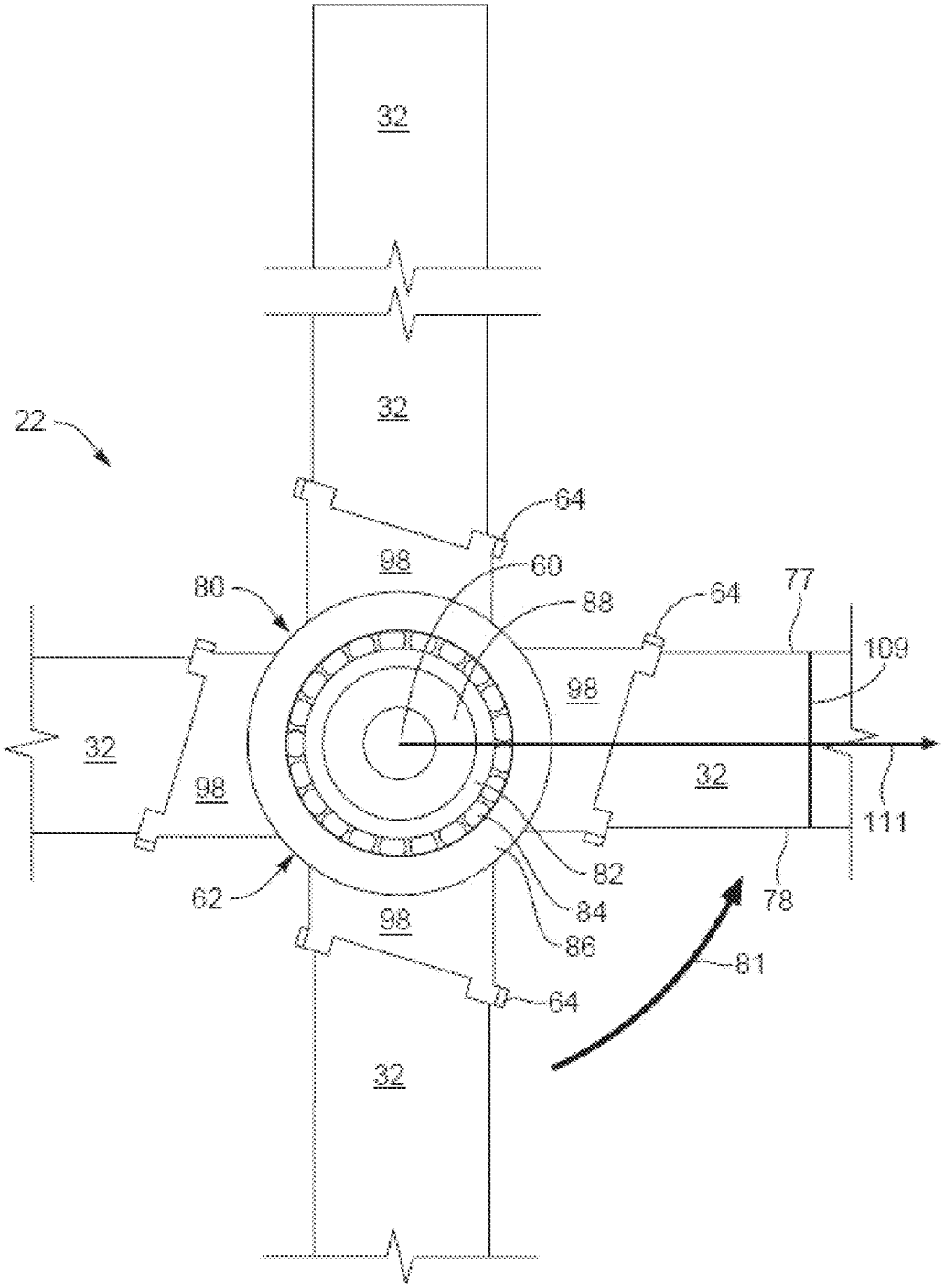
32
32
22
64
98
60
80
88
64
77
109
98
32
98
32
111
82
62
84
78
98
86
81
64
32

FIGURE 11

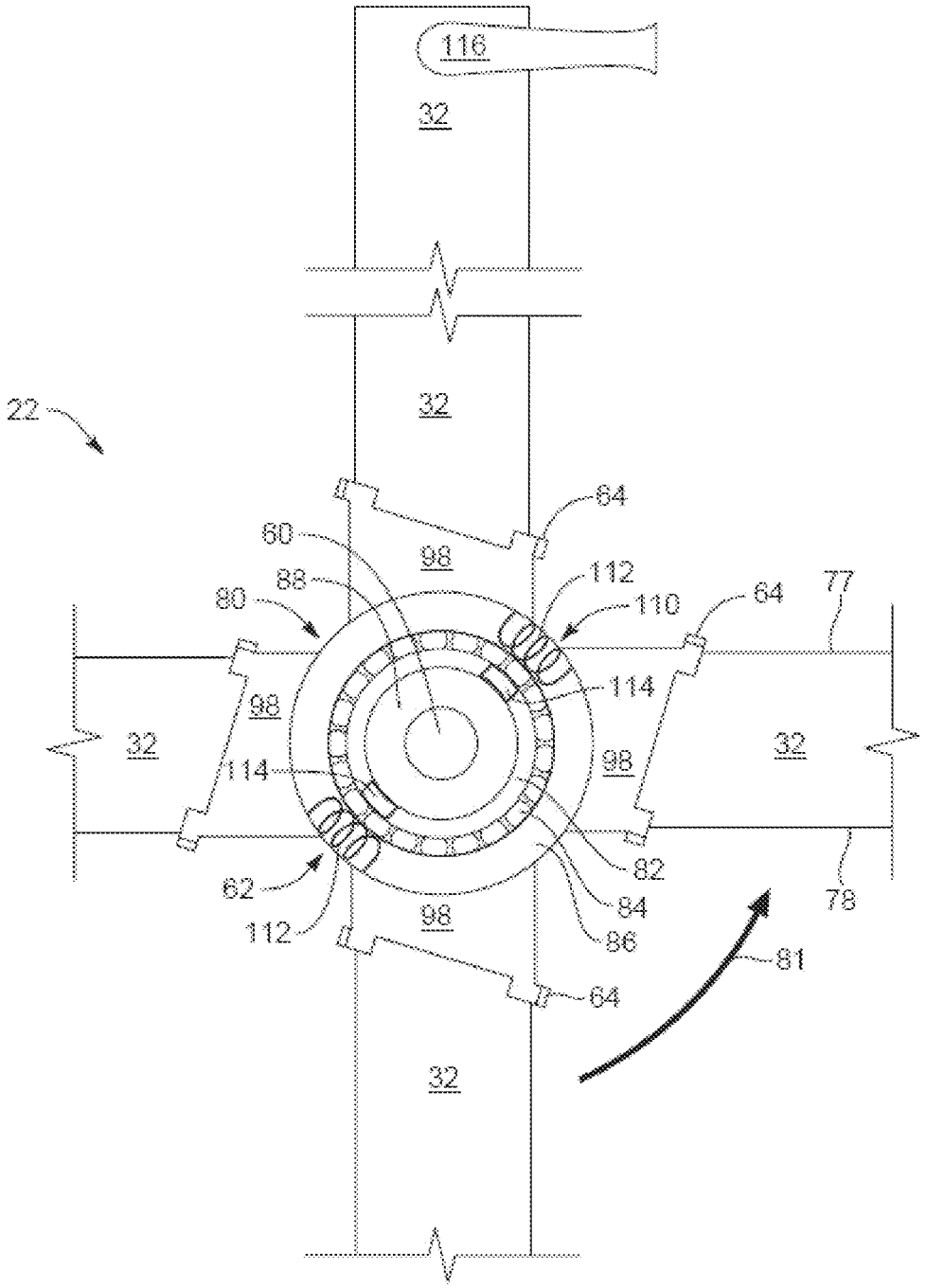
116
32
32
22
64
60
98
88
112
80
110
64
77
98
114
32
32
114
98
82
62
84
78
112
98
86
81
64
32

FIGURE 12

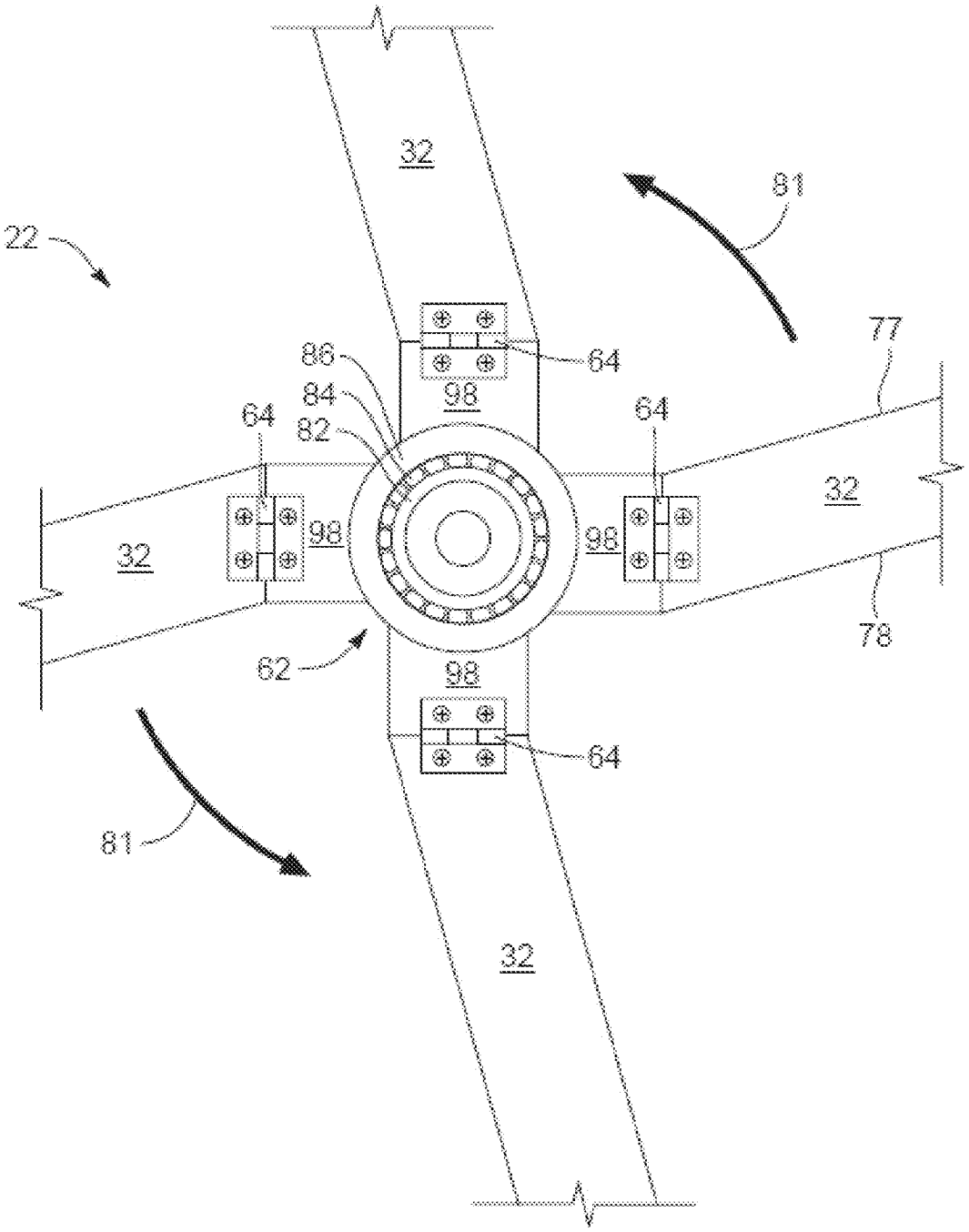

FIGURE 13

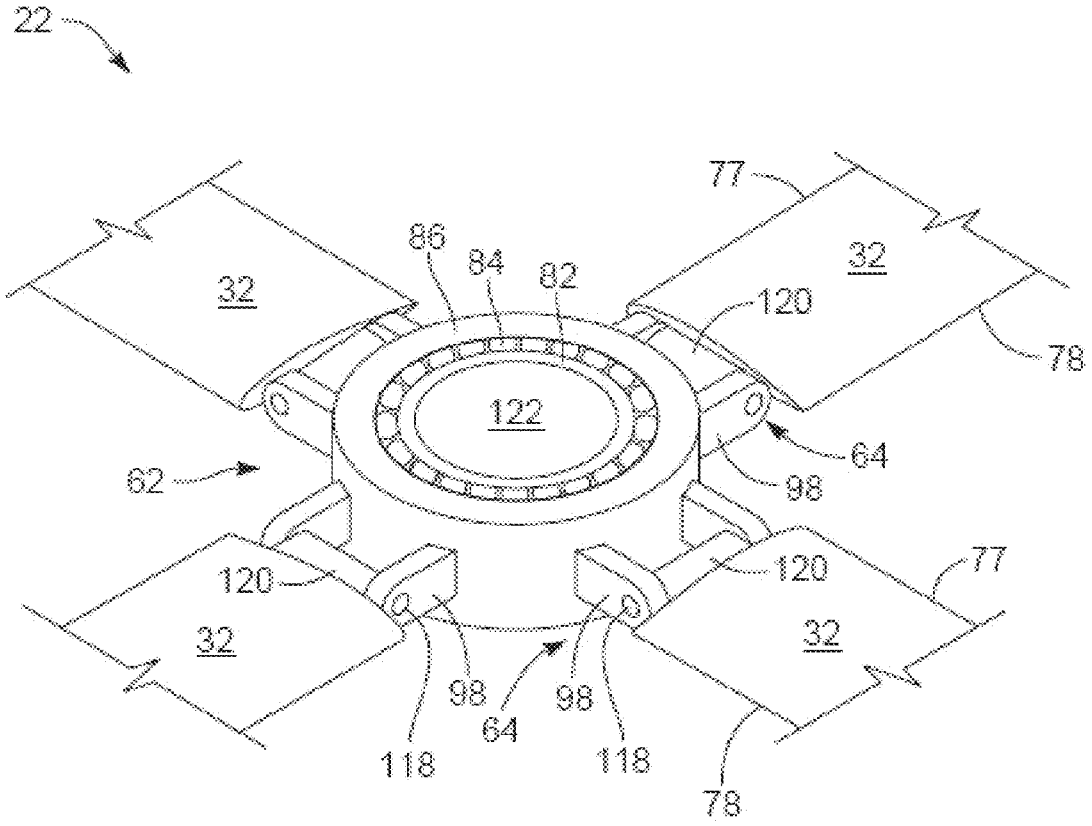
22
77
86
84
82
32
32
120
78
122
64
62
98
120
120
77
32
32
98
64
98
118
118
78

FIGURE 14

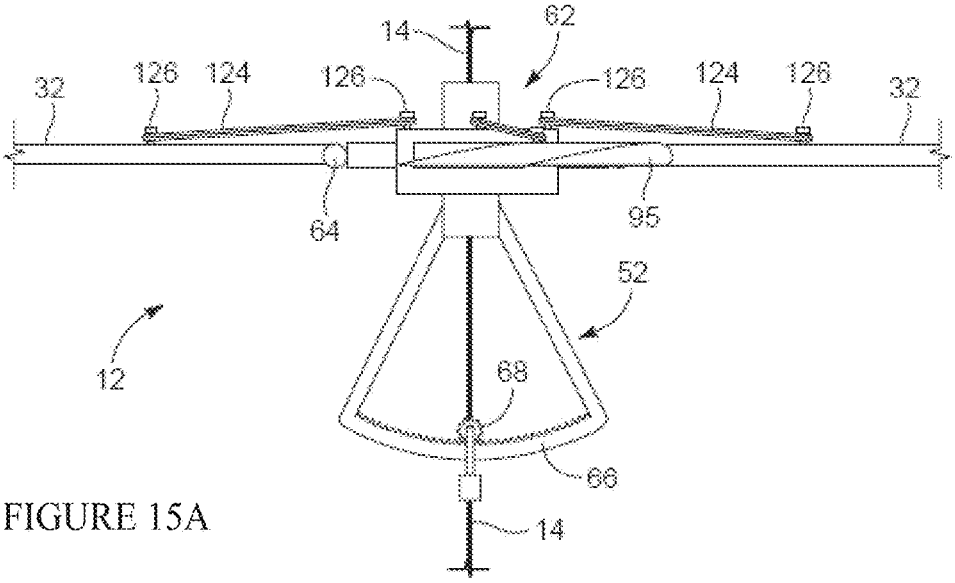

FIGURE 15A

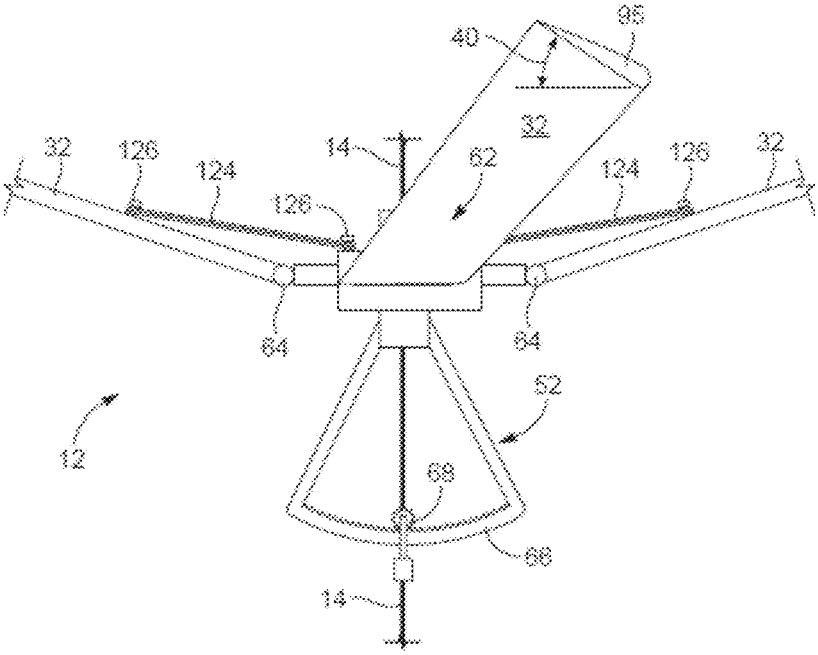

FIGURE 15B

FIGURE 16

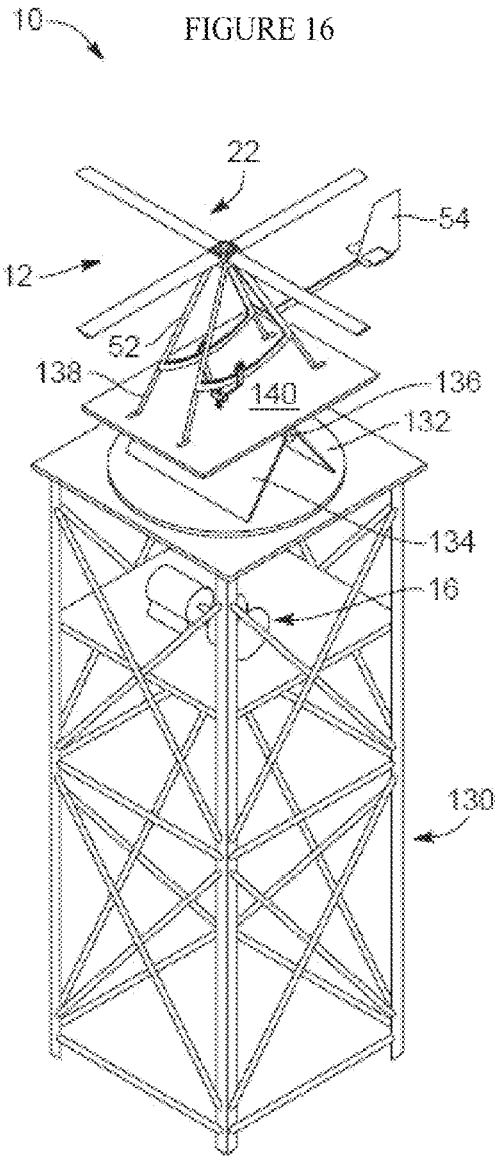

FIGURE 17

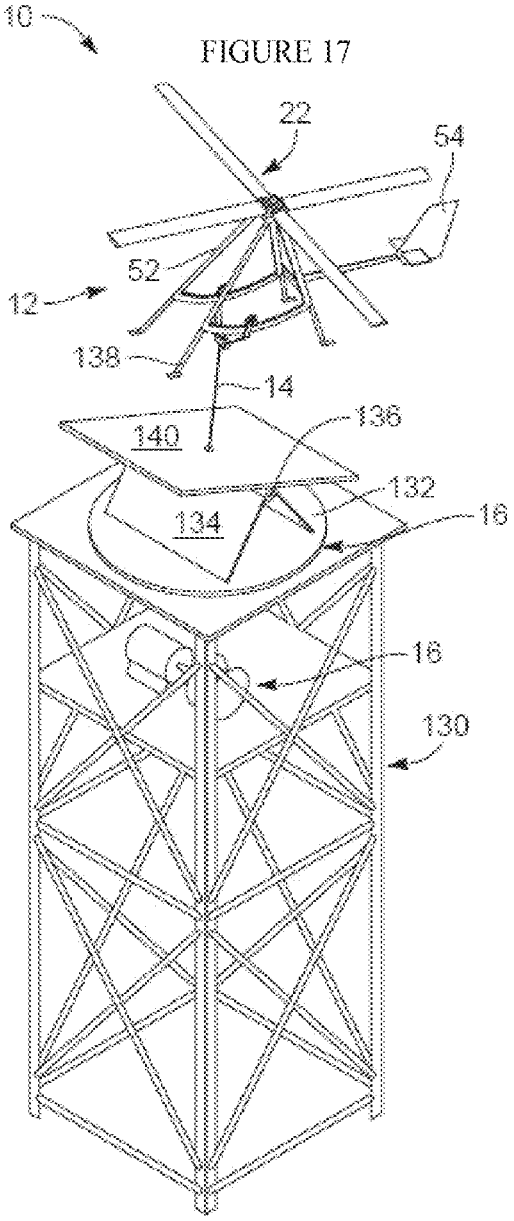

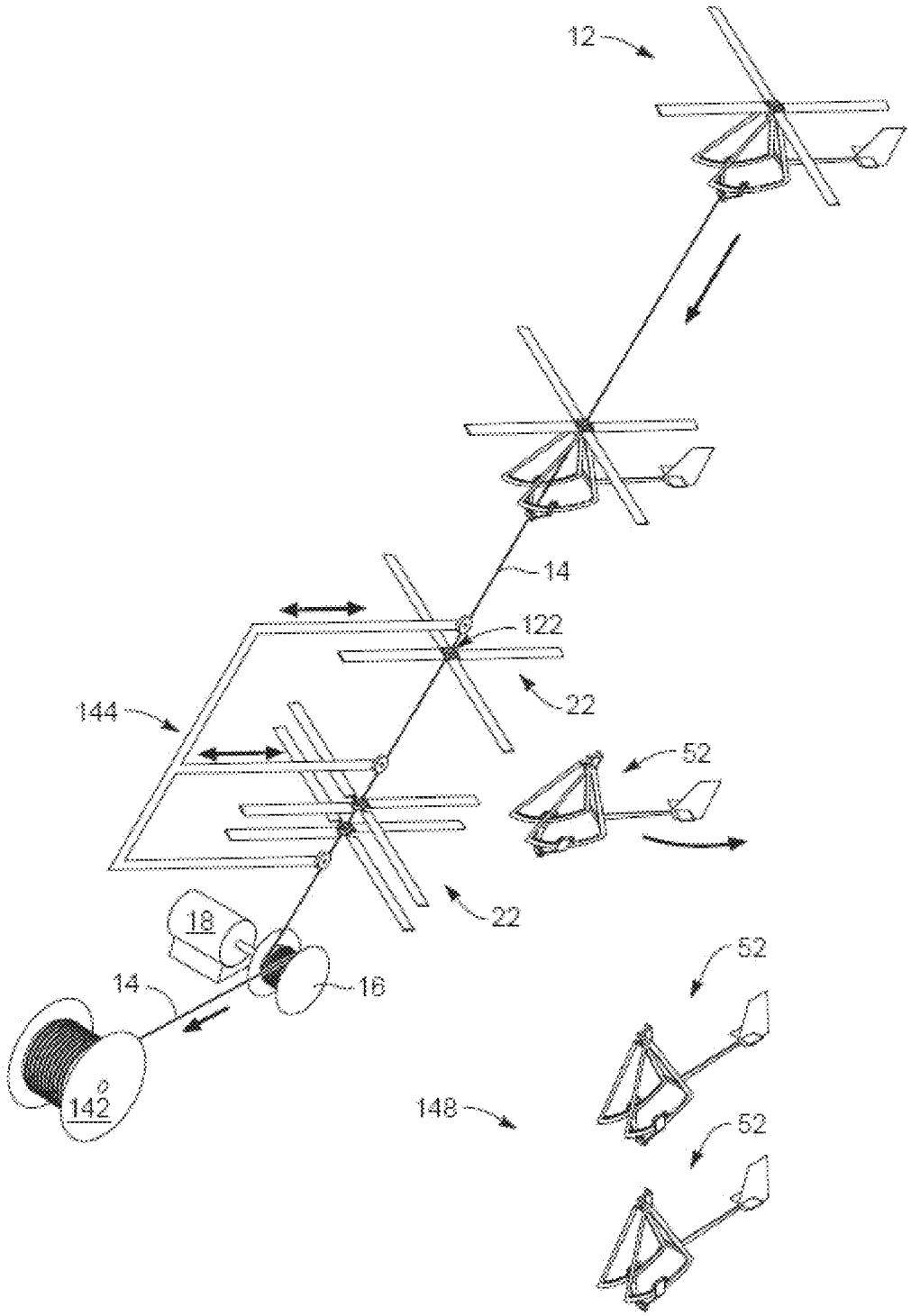

FIGURE 18

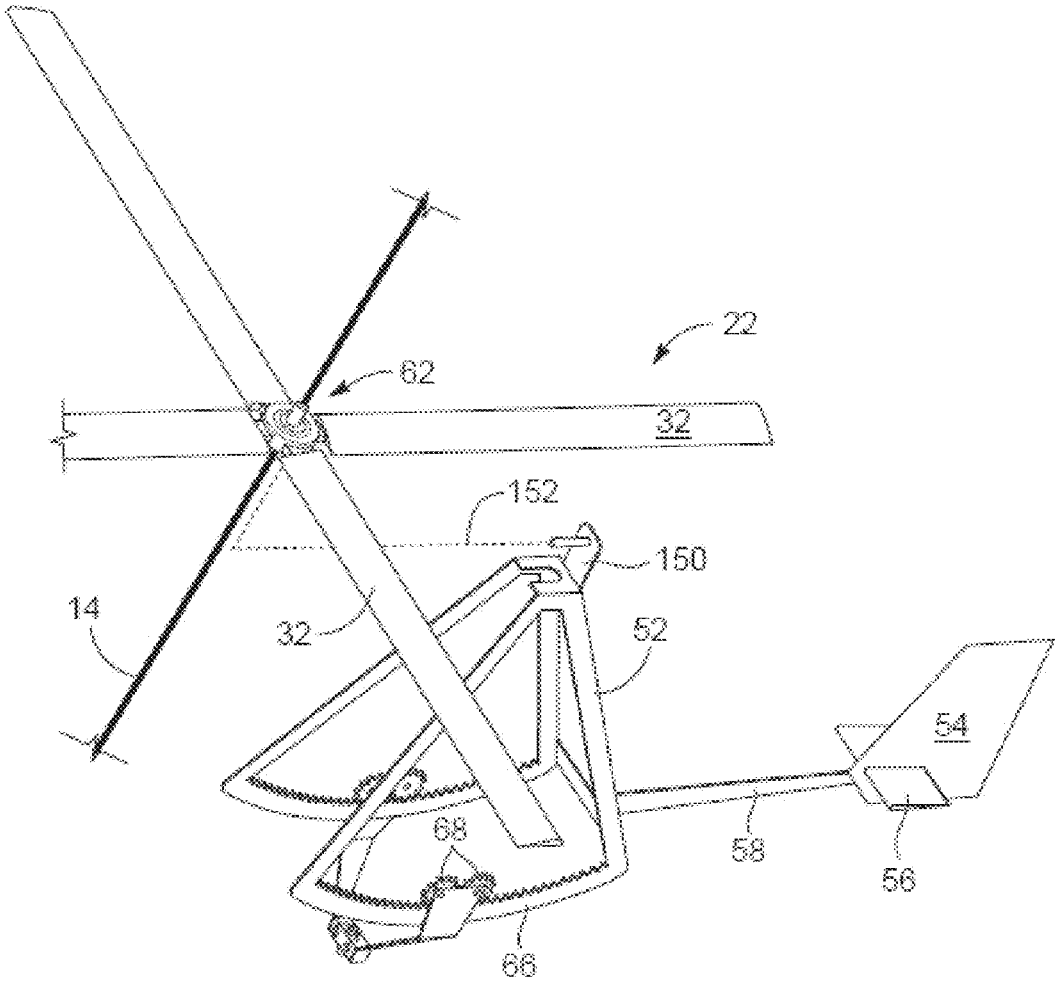

FIGURE 19

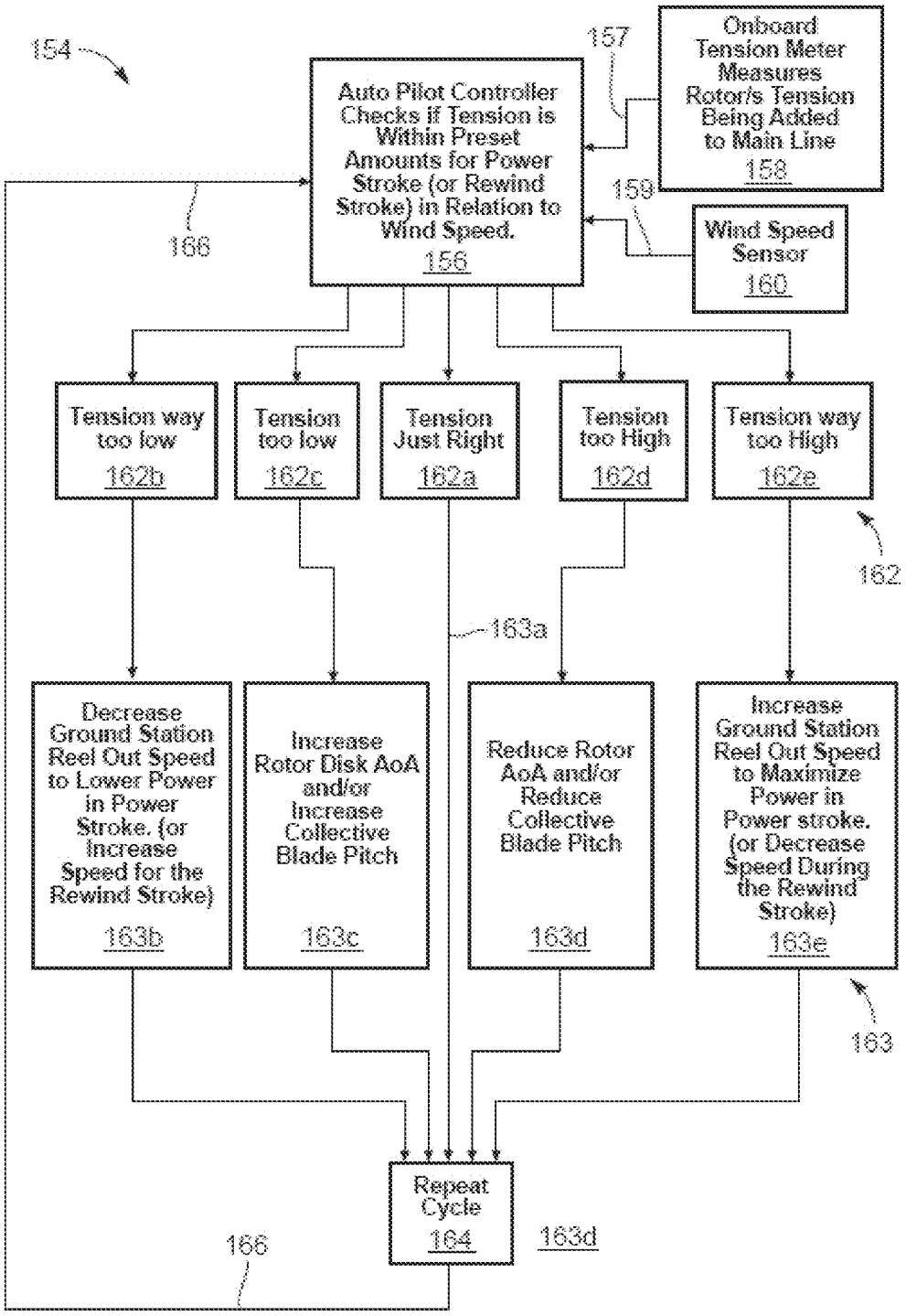
154
157
Onboard Tension Meter Measures Rotor/s Tension Being Added to Main Line
158
Auto Pilot Controller Checks if Tension is Within Preset Amounts for Power Stroke (or Rewind Stroke) in Relation to Wind Speed.
156
159
Wind Speed Sensor
160
166
Tension way too low
162b
Tension too low
162c
Tension Just Right
162a
Tension too High
162d
Tension way too High
162e
162
163a
Decrease Ground Station Reel Out Speed to Lower Power in Power Stroke. (or Increase Speed for the Rewind Stroke)
163b
Increase Rotor Disk AoA and/or Increase Collective Blade Pitch
163c
Reduce Rotor AoA and/or Reduce Collective Blade Pitch
163d
Increase Ground Station Reel Out Speed to Maximize Power in Power stroke. (or Decrease Speed During the Rewind Stroke)
163e
163
Repeat Cycle
164
163d
166

FIGURE 20

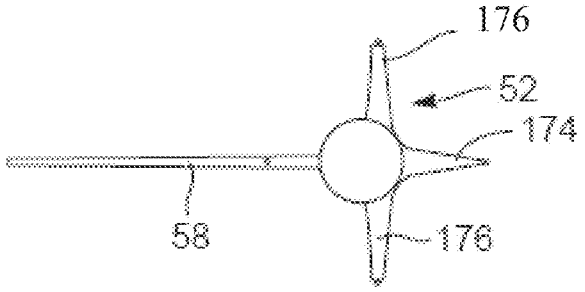

FIGURE 21A

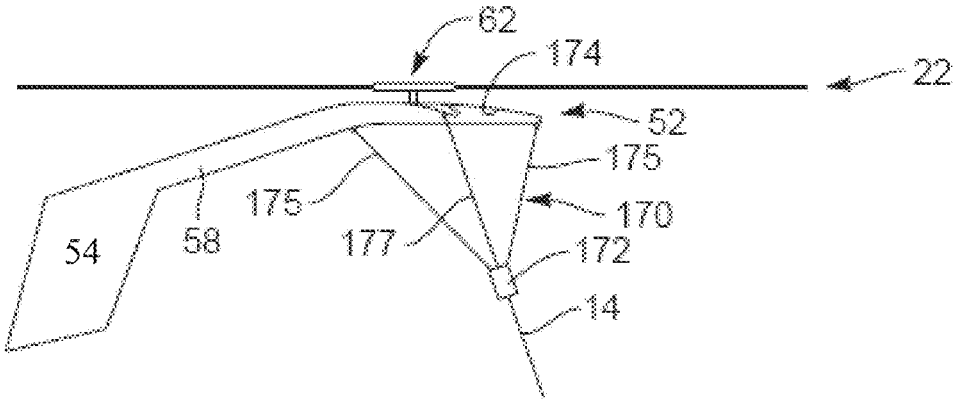

FIGURE 21B

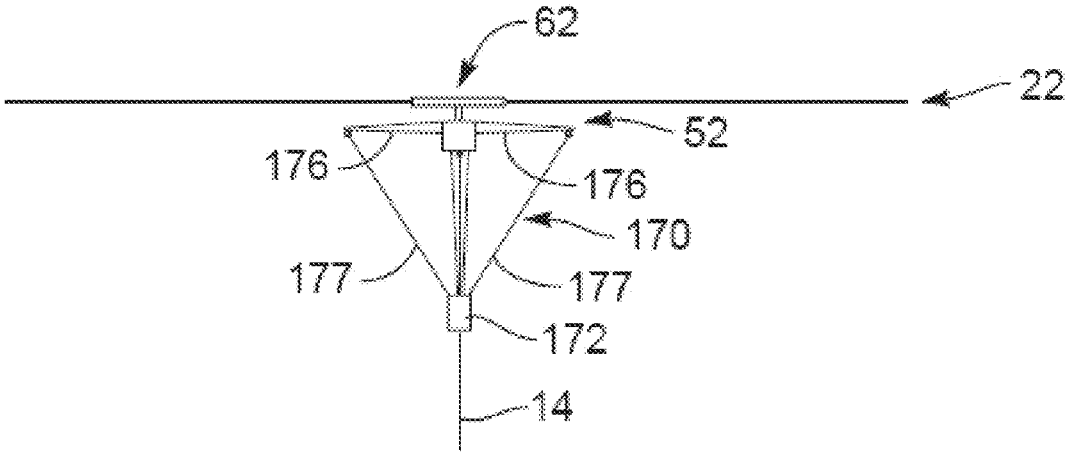

FIGURE 21C

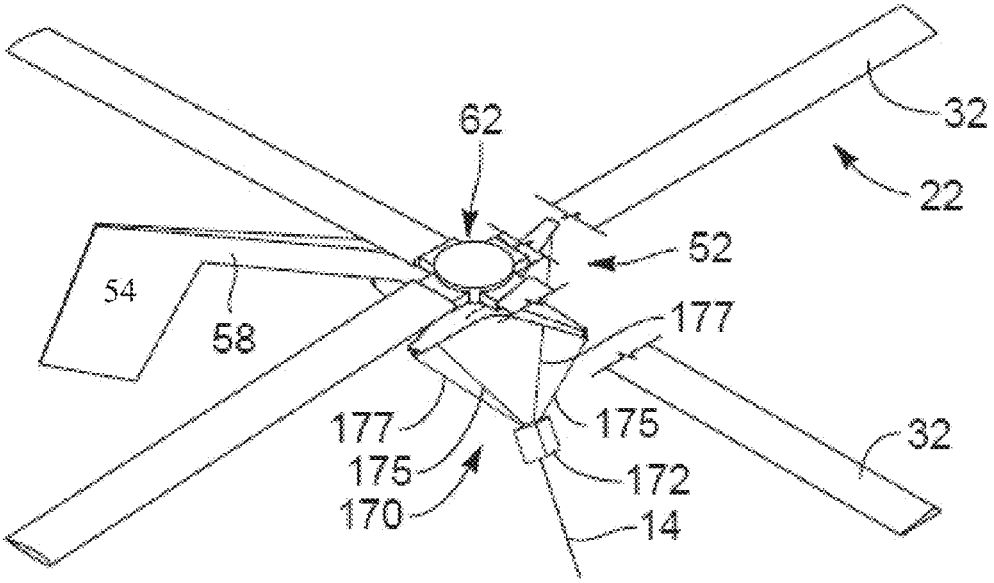

FIGURE 21D

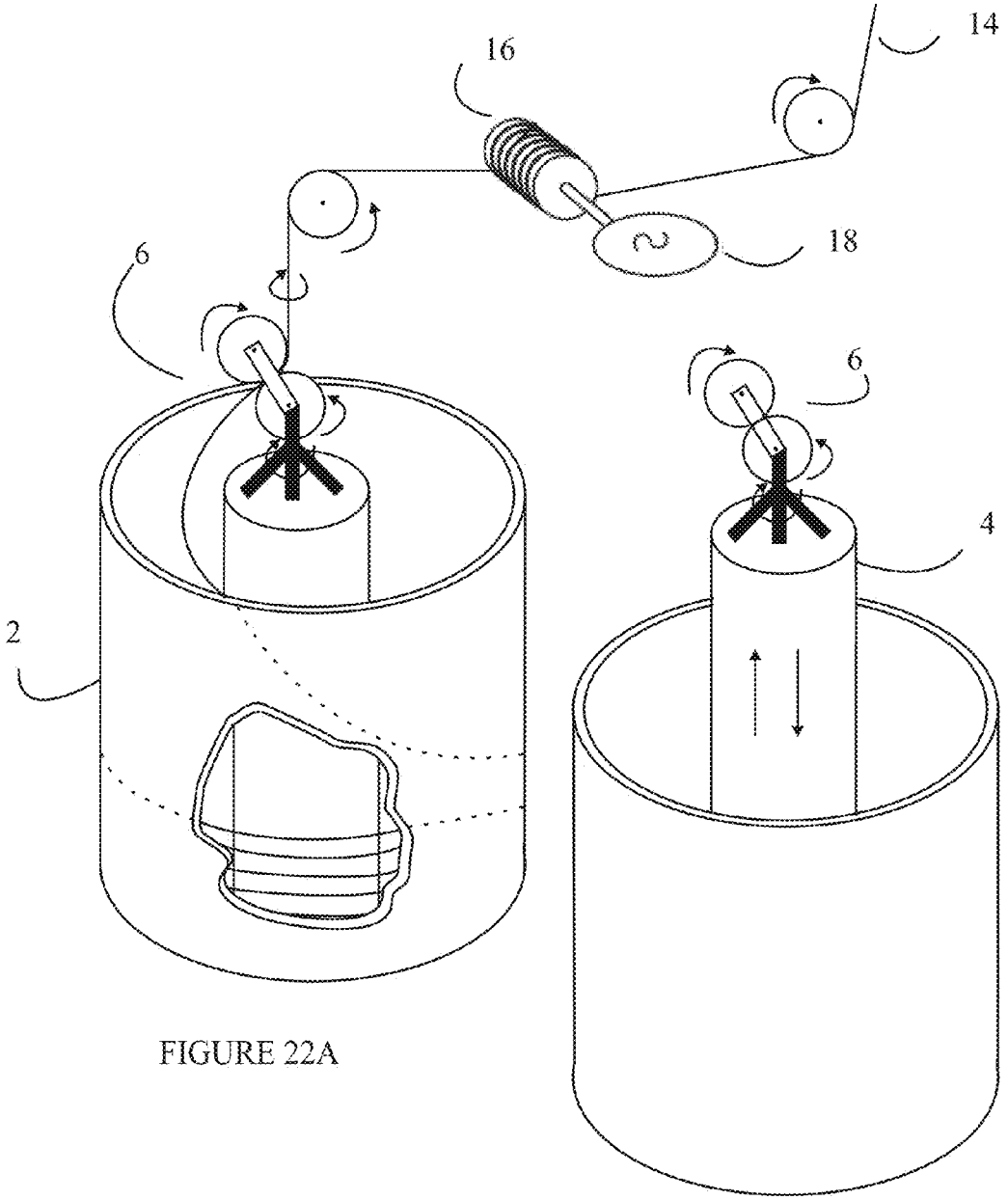

FIGURE 22A

FIGURE 22B

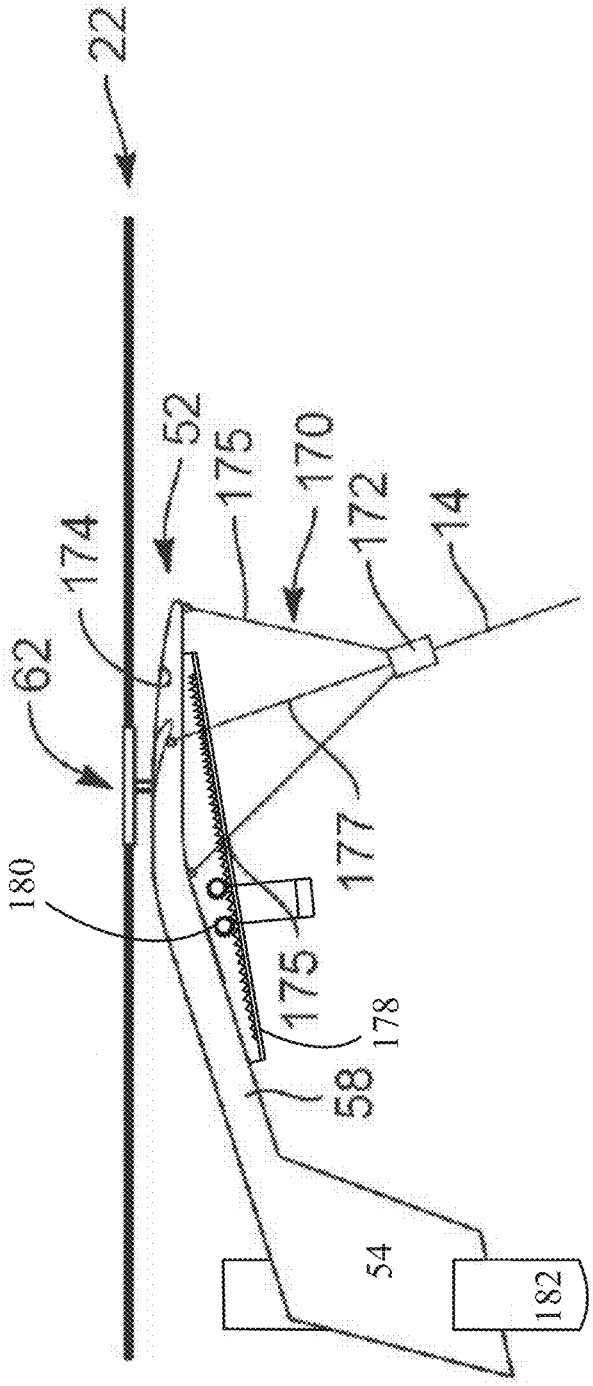

FIGURE 23

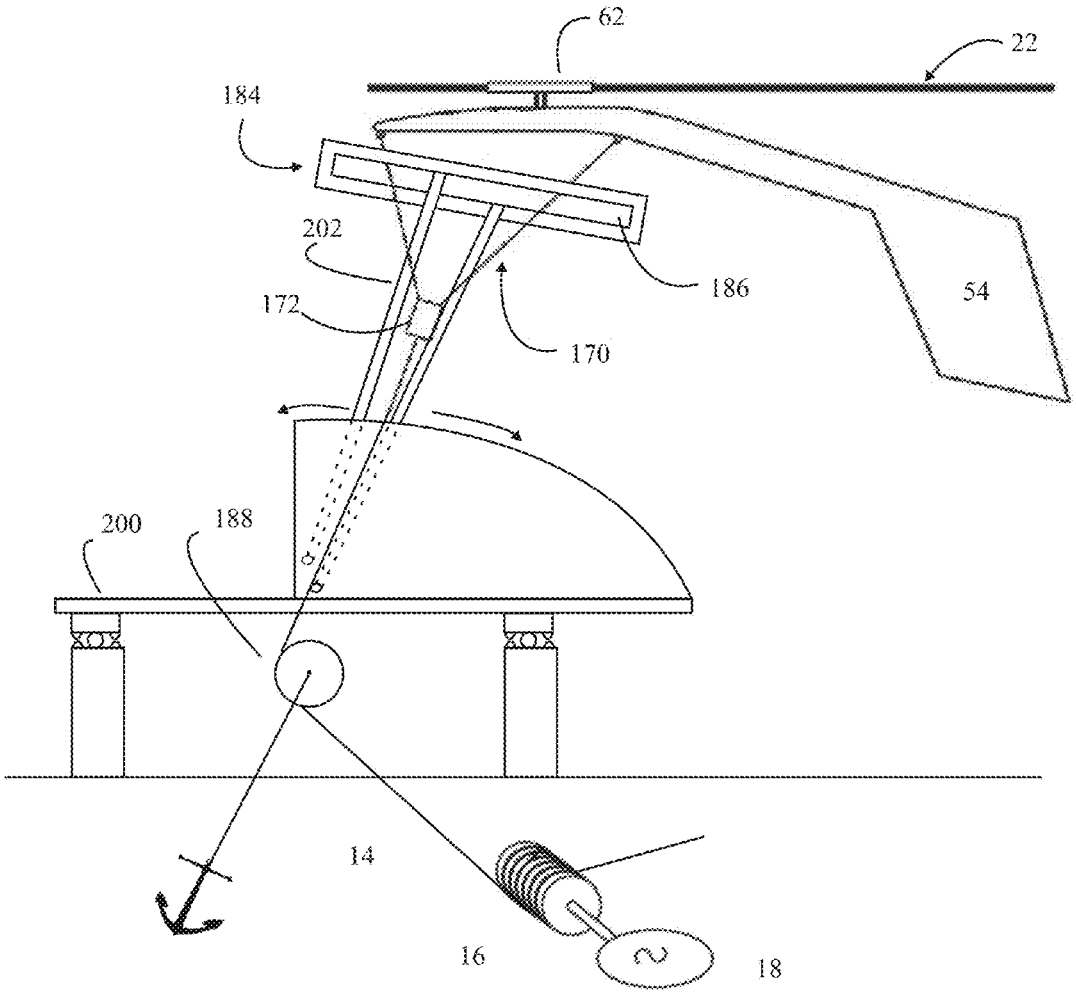

FIGURE 24

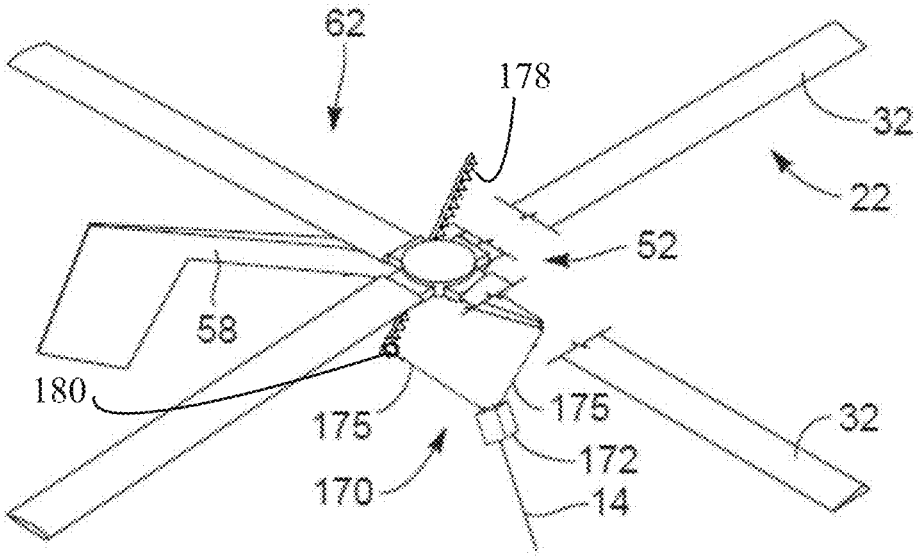

FIGURE 25

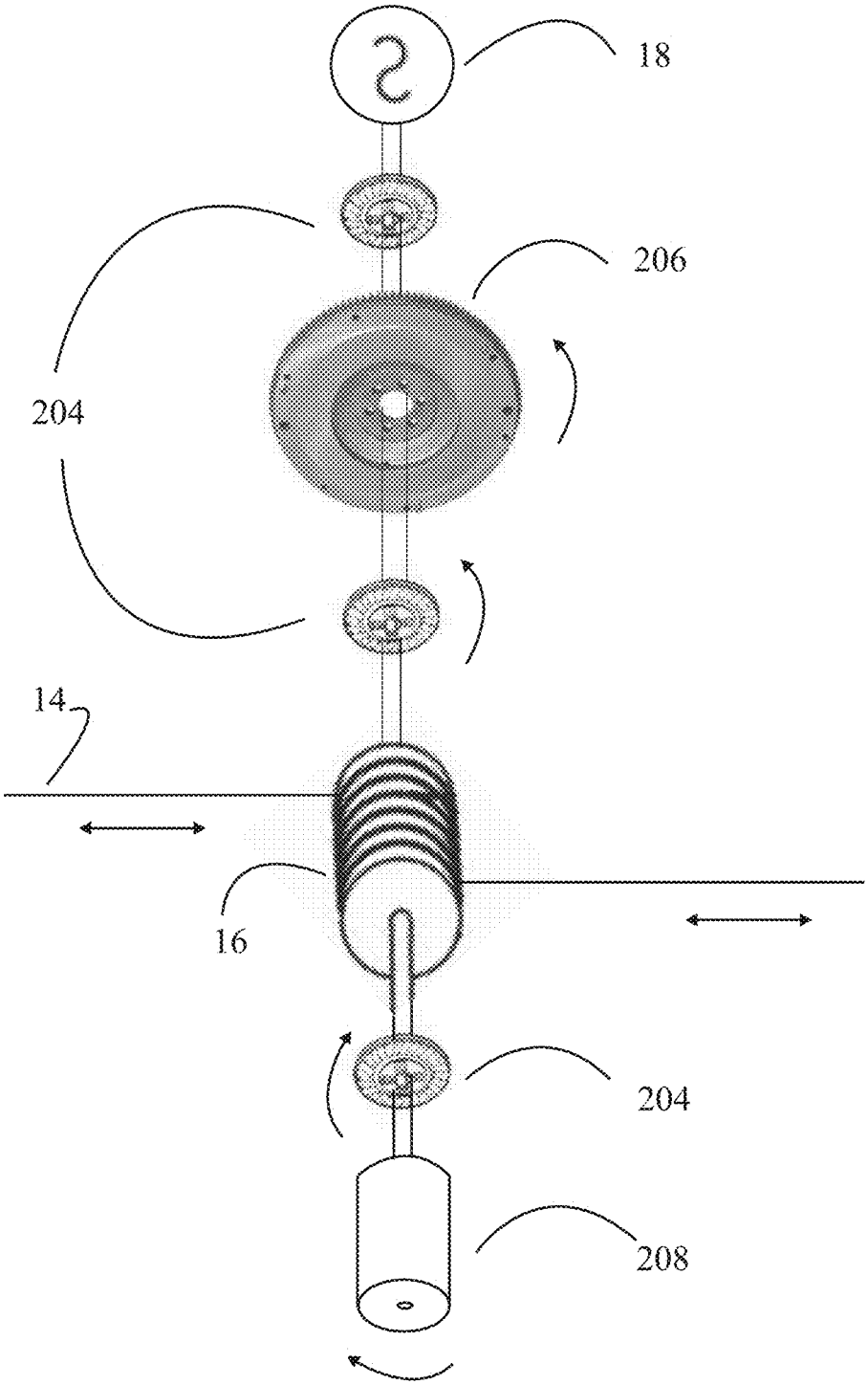

FIGURE 26

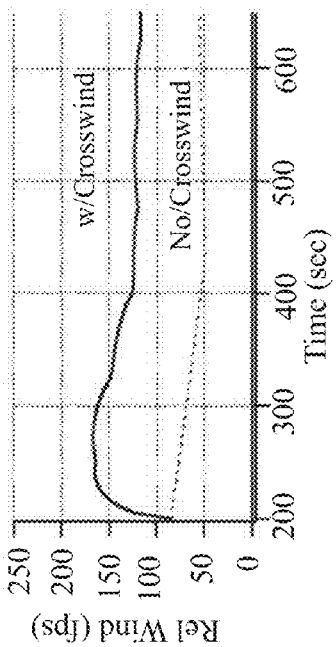

FIGURE 27A

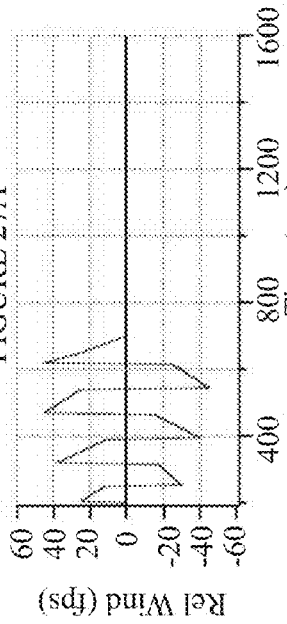

FIGURE 27B

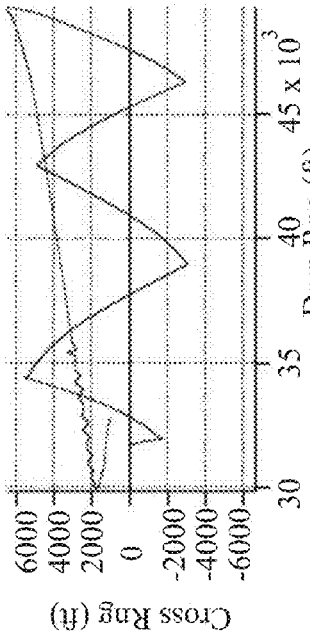

FIGURE 27D

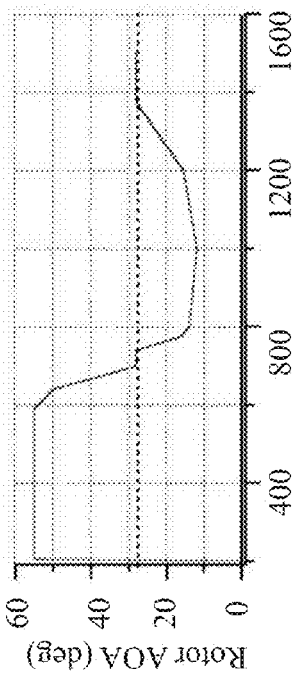

FIGURE 27C

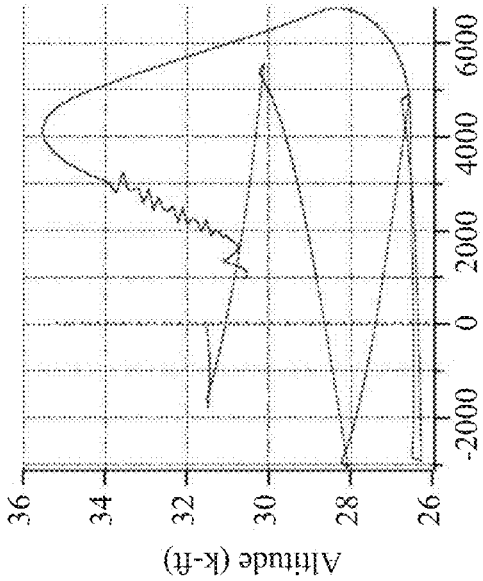

FIGURE 27E

GYROGLIDER POWER-GENERATION, CONTROL APPARATUS AND METHOD

FIELD OF THE INVENTION

This invention relates to field of control of unpowered aircrafts.

In particular, this invention relates to control of tethered gyrogliders as a mechanism to generate power.

BACKGROUND

Autogyro aircraft are a form of powered or unpowered rotorcraft, typically having one or more auto-rotating airfoils or blades. Gyrodynes power the rotor in preparation for takeoff, and then fly with a freewheeling rotor (rotary wing) in flight, pushed by a pusher propeller. Helicopters power the rotary wing with an onboard engine. Various versions of these have been developed since the first quarter of the twentieth century. During the 1930's autogyro aircrafts were actually employed commercially as rotary wing aircraft for shuttling mail.

An autogyro develops lift from unpowered, freely rotating, rotary blades. The blade of an autogyro is a wing. The wing rotates or "windmills" in response to wind passing through the blade or wing from the underside thereof. As wind passes through the underside of the blade, the angle of the blades with respect to the wind results in the blades responding as sails, transferring momentum from the wind into the blade, turning the blade, and diverting the wind. As the wind is diverted, momentum corresponding to the change in direction and speed of the wind is transferred as momentum into the movement of the blade or wing.

The key principle of an autogyro is the knowledge that the windmilling process of rotating the rotary wing or blades of an autogyro is sufficient to develop speed sufficient to invoke Bernoulli's principle. If the blade is made as more than a windmill, the blade may have a comparatively flatter undersurface and a rounded airfoil shape on its upper surface. Accordingly, as the blade moves through the air, under the motivation of the wind passing through the blade from underneath the blade, the airfoil develops a reduced pressure along the upper surface thereof, developing lift to raise the blade.

A fixed wing aircraft is drawn through the air by a propeller, thus passing air over the fixed wing. Lift occurs by the drop in pressure that occurs as the wind flowing over the top of the wing accelerates to pass over the thickest portion of the wing. A rotary wing also develops lift by the relative motion of air or wind over the top thereof.

The drop in pressure results from the principles of conservation of energy as the air moves relative to the airfoil. Its total pressure head remains substantially constant. If the velocity changes, as it must in order to speed up to pass through a reduced cross sectional area of flow, then the static pressure must drop in order to maintain head at a substantially constant value.

The curvature of the upper surface of an airfoil restricts the available cross sectional area for the air movement to pass through, requiring the air to speed up, thus reducing its pressure to meet conservation of energy requirements.

Autogyro aircraft have been motivated by pusher propellers mounted near the rear of a fuselage, pushing the aircraft forward. The rotor disk, that is, the theoretical disk is swept by the rotary wing, is pitched at an angle that passes the incoming air up through the rotor disk. The rotor disk is tilted upward towards its front extremity, and comparatively

downward at its rear most extremity. Meanwhile, the actual angle of the blade itself with respect to the air through which the blade passes in its rotary motion, is set at some angle that will tend to minimize drag, while maximizing lift. "Blade pitch" is generally controlled or set at a position to "fly" through the air.

The most significant discovery about autogyro aircraft is probably the fact that the relative airspeed of a blade or wing rotating in air may be uncoupled from the relative air speed of the overall system (fuselage, axis of rotation, or the like). Thus stall speed may be substantially different from relative ground speed.

Helicopters can actually hover. Autogyros, on the other hand, can only hover in certain limited circumstances wherein their forward motivation from a motor or other mechanism is matched by an actual head wind speed relative to the earth that is naturally occurring. In this circumstance or while descending, an autogyro may hover or maintain position with respect to the earth. Nevertheless, a helicopter may hover in substantially any relative wind, including a still air situation.

Wind energy has been developed along a path substantially independent from aircrafts for many years. Momentum from the passing wind is received, the wind is redirected and that momentum is harvested into motion of the windmill.

By appropriate mechanical linkages, a windmill may pass energy as a linear translation or as a rotary motion to some other operational mechanism. For example, a gristmill transfers the energy of the wind, vanes or blades of the mill to the rotatory motion of a grinding stone.

In the early twentieth century, generators, operating largely as windmills were installed at remote locations inaccessible by public utilities. Such system relied on a windmill-like blade or multiple blades turning a generator, storing energy in batteries.

In more recent years, towers have been erected in various configurations supporting blades that reflect all the aerodynamic engineering of aircraft wings and aircraft propellers acting to retrieve energy from the wind, rather than drawing an aircraft or pushing an aircraft through the air. Thus, large systems have been developed at substantial cost to elevate wind turbine blades, propellers, or the like above the surface of the earth in areas of high wind, constant wind, or otherwise commercially feasible locations of wind energy available for harvest.

Nevertheless, wind energy has been difficult and expensive to develop. Wind on the surface of the earth is predictable primarily as weather patterns, or as daily, directional breeze. At a particular location the daily cycle of wind velocity and direction as a function of time may be plotted. Substantial effort, energy, and engineering resources have been devoted to development of meteorological towers and instrumentation developed to test wind velocity and direction, near the surface of the earth. Wind is created by, and therefore dependent on, terrestrial phenomena. For example, canyons are a classic source of wind energy. The diurnal cycles of heating and cooling along canyons, mountains, and the like give rise to wind velocities and directions that may be harvested for wind energy.

Nevertheless, the physical structures available, and the methods of installing them, are limited by the physics and engineering available to exploit them. There is thus felt a need to develop a method and apparatus to capture wind energy using a greater duty cycle than is typically available for terrestrial windmill locations and effectively use it for generating power.

SUMMARY OF THE INVENTION

In accordance with the present invention, there is provided a gyroglider apparatus for power generation comprising:

at least one gyroglider comprising a rotor with a plurality of rotor blades rotatably secured to a frame, the rotor adapted to rotate about an axis of rotation and provide a lift to the gyroglider; the rotor having a rotor pitch defined by a path of the rotor with respect to the incoming wind and a blade pitch defined respectively for each of the rotor blades by the angle of the blade with respect to the incoming wind;

a tether having a first end and a second end, the first end being positioned proximate the earth and the second end extending aloft, the tether being adapted to secure the gyroglider at the second end thereof;

tension management means adapted to manage tension in the tether comprising:

an onboard tension meter adapted to measure tension existing in or added to the tether;

a wind speed sensor adapted to indicate the wind speed to which the gyroglider is exposed; and

a controller adapted to receive inputs from the onboard tension meter and the wind speed sensor and cyclically monitor the tension in the tether, the controller being further adapted to determine whether the input from the onboard tension meter is consistent with the configuration of the gyroglider, the rotor and the blades; and generate an output state of the tether;

a first control means adapted to receive the output state of the tether and selectively control the rotor pitch if the output state indicates a value too low or too high with reference to a predetermined range;

a second control means adapted to receive the output state of the tether and selectively control the blade pitch if the output state indicates a value too low or too high with reference to the predetermined range;

a capstan adapted to receive the output state of the tether and further adapted to cyclically reel in or payout the tether proximate the first end thereof, in a predetermined systematic order if the output state indicates a value way too low or way too high with reference to the predetermined range;

a converter adapted to convert rotational energy from the capstan to power in a form selected from the group consisting of transmissible forms, storage forms and both, a transmissible form and a storage form; and

a connector adapted to connect the capstan to the converter.

Preferably, in accordance with this invention, the gyroglider is spaced apart from other the gyroglider in a series on the tether in the event there are more than one gyrogliders.

Typically, the tether is selected from the group of materials consisting of steel cable, synthetic polymeric fiber braided into ropes, ultra-high strength, ultra-high thermal and flame resistant fiber and carbon nanotube ropes.

Typically, the capstan is selected from the group consisting of reel, spool and sheave.

Preferably, the capstan is secured proximate a surface of the earth selected from land and water.

Preferably, the converter is selected from the group consisting of electrical generator, hydraulic motor, motor-generator and gas compressor.

Typically, the frame is provided with pitch control means selected from the group consisting of rudders, elevators and both a rudder and an elevator.

Typically, in accordance with this invention, the first control means and the second control means are coupled.

In accordance with an aspect of the invention, the first control means includes the frame comprising a track defining a path for a pinion operated by a servo, the pinion operated along the track adapted to control the rotor pitch.

In accordance with another embodiment of the present invention, there is provided a gyroglider apparatus for power generation comprising:

at least one gyroglider comprising a rotor secured to a mast, the rotor being provided with a plurality of rotor blades rotatably secured to a frame and adapted to rotate about an axis of rotation and provide a lift to the gyroglider; the rotor having a rotor pitch defined by a path of the rotor with respect to the incoming wind and a blade pitch defined respectively for each of the rotor blades by the angle of the blade with respect to the incoming wind;

a tether having a first end and a second end, the first end being positioned proximate the earth and the second end extending aloft, the tether being adapted to secure the gyrogliders at the second end thereof;

tension management means adapted to manage tension in the tether comprising:

an onboard tension meter adapted to measure tension existing in or added to the tether;

a wind speed sensor adapted to indicate the wind speed to which the gyroglider is exposed; and

a controller adapted to receive inputs from the onboard tension meter and the wind speed sensor and cyclically monitor the tension in the tether, the controller being further adapted to determine whether the input from the onboard tension meter is consistent with the configuration of the gyroglider, the rotor and the blades; and generate an output state of the tether;

a first control means adapted to receive the output state of the tether and selectively control the rotor pitch if the output state indicates a value too low or too high with reference to a predetermined range;

a second control means adapted to receive the output state of the tether and selectively control the blade pitch if the output state indicates a value too low or too high with reference to the predetermined range;

a capstan adapted to receive the output state of the tether and further adapted to cyclically reel in or payout the tether proximate the first end thereof, in a predetermined systematic order if the output state indicates a value way too low or way too high with reference to the predetermined range;

a converter adapted to convert rotational energy from the capstan to power in a form selected from the group consisting of a transmissible form, a storage form and both, a transmissible form and a storage form; and

a connector adapted to connect the capstan to the converter.

Preferably, in accordance with this invention, the first control means comprises:

at least two pitch controllers adapted to operate along rails provided on the frame, the frame being adapted to maintain a spread angle between a front and rear portion to establish a predetermined length for the rails, the rails defining a path for a pinion, the pinion operating along the rails adapted to move the pitch controllers back and forth along the rails, the rails being further adapted to be selected from the group consisting of smooth rails, toothed rails, smooth rails with a detent adapted to provide a preferential position to the frame

when restrained by the tether, a forward portion ahead of the detent and an aft portion rearward of the detent and toothed rails adapted to provide a preferential position to the frame when restrained by the tether, a forward portion ahead of the detent and an aft portion rearward of the detent; and

a roll controller adapted to operate on a track extending between the pitch controllers, the frame being further adapted to maintain an angle between a left and right portion to establish a predetermined length for the track.

Additionally, in accordance with this invention, the frame is provided with a mount structure adapted to provide a platform for mounting control and communication equipment.

Typically, in accordance with this invention, bearings are provided to reduce friction between the rotor and the mast, the bearing being provided with bearing rollers operating between an inner race adapted to be substantially fixed with respect to the rotation or lack thereof of the mast and a rotating outer race, the bearing rollers being selected from the group consisting of thrust bearing rollers and ball bearings. Alternatively, the bearing rollers may operate between a rotating inner race and an outer race adapted to be substantially fixed with respect to the rotation or lack thereof of the mast.

Preferably, in accordance with this invention, the gyroglider apparatus further comprises:

the frame adapted to be in the form of a tube;

the rotor further comprising pivots provided between a hub and the blades, the pivots being adapted to extend along a path that is canted with respect to a radius extending from the center of the hub; and

the first control means comprising an actuator operatively connected between the frame and a boom fixed to the inner race of the bearing, the actuator being provided with a movable element and a housing substantially fixed with respect to the frame, the actuator being adapted to rotate a boom by extending the movable element to control the rotor pitch.

In accordance with one more aspect of this invention, the first control means comprises a pivotable platform adapted to pitch about a predetermined pivot on the frame, the platform having a front end and a back end spaced apart from each other at a predetermined distance, the front end being in a region proximal to the pivot and the back end adapted to extend away from the pivot and being provided with a bias element operatively connected to the frame, the bias element being adapted to urge the platform into a particular attitude with respect to the frame.

In accordance with an aspect of this invention, the second control means includes the rotor further comprising pivots provided between a hub and the blades, the pivots being adapted to extend along a path that is canted with respect to a radius extending from the center of the hub and facilitate flapping of the blades to control the blade pitch.

Preferably, in accordance with this invention, the apparatus further includes bearings provided to reduce friction between the rotor and the mast, the bearings adapted to have bearing rollers operating between a rotating inner race and an outer race adapted to be substantially fixed with respect to the rotation or lack thereof of the mast; a power generator in the form of a coil fixed with respect to the inner race and the outer race, the coil being adapted pass through a magnetic field created by a magnet attached to the inner race, the power generator adapted to provide operational power to instrumentation and control equipment associated with the gyroglider.

Preferably, in accordance with this invention, jets are placed at the extreme outer ends of the blades, the jets being activated by remote control from a ground station and adapted to control flight during start up and fly down of the gyroglider.

Typically, in accordance with another aspect of this invention, the second control means includes the rotor further comprising pivots provided between a hub and the blades, the pivots being adapted to extend along a path that is perpendicular with respect to a radius extending from the center of the hub and facilitate flapping of the blades to control the blade pitch, the blades being adapted to be canted at an angle forward in a leading edge direction.

In accordance with yet another aspect of this invention, the first control means includes the rotor further comprising pivots provided between a hub and the blades, the pivots adapted to secure each blade to an anchor provided fixedly to the hub and rotating therewith, a pin adapted to extend through each of the anchors to secure trunnions fixed to each of the blades, the pin being further adapted to extend along a direction perpendicular to a radius through the center of the hub.

Typically, the first control means may also include the rotor further comprising pivots provided between a hub and the blades, the pivots adapted to secure each blade to an anchor provided fixedly to the hub and rotating therewith, a pin adapted to extend through each of the anchors to secure trunnions fixed to each of the blades, the pin being further adapted to be canted at an angle with respect to a radius through the center of the hub.

Additionally, in accordance with this invention, the second control means further comprises:

the rotor further comprising pivots provided between a hub and the blades; and

a biasing element operatively connected between the hub and the blades by an attachment means selected from the group consisting of bollards, posts and boles, the biasing element adapted to bias each of the blades in an upward position, the biasing element being a resilient element adapted to be controlled by a centrifugal force and further adapted to passively control the blade pitch.

Particularly, the second control means further comprises:

the rotor further comprising pivots provided between a hub and the blades; and

a biasing element operatively connected between the hub and the blades by an attachment means selected from the group consisting of bollards, posts and boles, the biasing element adapted to bias each of the blades in an upward position, the biasing element being a servo actuator adapted to actively control the blade pitch.

Preferably, in accordance with this invention, the gyroglider is provided with legs, the legs being adapted to be attached to the frame in a manner selected from the group of attachment means consisting of extensible, permanent, and retractable, the gyroglider being adapted to take off or land on a deck supported by the legs, the deck adapted to pitch about a pivot abutting the deck at a predetermined angle for adequate rotor pitch, the deck being supported on a turntable atop a structure selected from the group consisting of buildings, towers, barges, buoys and watercrafts.

Preferably, in accordance with this invention, the apparatus further comprises:

a landing fixture with a captive slot;

two support arms with a proximal end and a distal end, the support arms adapted to pivotably secure the landing fixture at the distal end;

a hollow turntable adapted to pivotably secure the support arms at the proximal end;

a first and second bridle line adapted to be cradled in the captive slot and further adapted to roll and pitch for the pitch control, the first and second bridle lines converging at a bridle knot to form the tether; and

a snatch block being firmly anchored to a structure selected from the group consisting of buildings, towers, barges, buoys and watercrafts, the snatch block being located just below the turntable at the center, the first end of the tether being connected to the snatch block.

Additionally, in accordance with this invention, the apparatus further comprises:

a staging mechanism adapted to selectively remove each of the frames from the associated rotor at a ground station, the staging mechanism being further adapted to stack the rotors in close proximity to each other separated by a padding for storage and still further adapted to redeploy each frame with its associated rotor; and

a capture mechanism adapted to secure the frame to a hub of the rotor, the capture mechanism being further adapted to selectively fix the frame at a predetermined location on the tether.

Furthermore, in accordance with this invention, the first control means includes:

a controller adapted to draw a pitch arm of the gyroglider downwards or release it upwards to control pitch of the gyroglider, the controller being further adapted to extend or shorten the distance from the controller of a roll arm provided one on either side of the gyroglider to control roll of the gyroglider; and

a bridle comprising:

a first pitch control line and a second pitch control line being connected to the pitch arm at a forward end and an aft portion of the frame respectively and further connected to the controller; and

a first roll control line and a second roll control line being connected to each of the roll arms and further connected to the controller.

Preferably, the first control means includes:

at least one roll control means selected from the group consisting of toothed track, hydraulic ram, line and smart metal mounted to an underside of said frame with at least one servo roller;

a bridle comprising a first control line and a second control line, said first and second control lines having a proximal end and a distal end, said proximal end of said first control line and said second control line being connected to an aft end and a fore end of said frame respectively, said proximal end of said first control line being further adapted to be connected to said aft end via said servo roller, said proximal end of said second control line being further adapted to be connected to said fore end via another of said servo roller in the event there are two of said roll control means; and

a controller connected to the distal end of the first and second control line and adapted to pull in or out the first control line and the second control line to activate pitch control, the controller being further adapted to cooperate with the servo roller to pull or release the first and second control line by moving to a left or right direction with reference to the frame to activate roll control.

Typically, in accordance with this invention, the controller is selected from the group consisting of computerized control mechanism and autopilot.

Particularly, in accordance with one aspect of this invention, the apparatus further comprising:

a toothed track mounted to an underside of the frame with a servo roller; and

a weighted box containing battery and other heavy flight equipment, the box being adapted to slide fore and aft on the track to change the center of gravity (CoG) for a controlled free flight.

Optionally, in accordance with this invention, the apparatus further comprising a horizontal stabilizer connected at the rear end of the gyroglider, the stabilizer having control surfaces to provide a counter downward force to match the lifting force of the Center Of Pressure (CoP) at the rotor, for a controlled free flight.

A system for meteorological data collection, radar systems, fire detection, ground sensing, communication devices and telephone cell repeaters using a gyroglider apparatus may be made in accordance with the present invention.

Preferably, in accordance with this invention, there is provided a tether storage system comprising:

a cylindrical tank with an open top surface and closed cylindrical wall, the tank being adapted to have a diameter slightly larger than the natural coiling diameter of the tether, the cylindrical wall being coated with a layer adapted to reduce friction and heat buildup;

a center pillar with a cylindrical wall, the pillar being adapted to serve as a space filler and located coaxially in the tank defining a storage space for the tether in between the pillar and the tank, the storage space being just adequate to lay down the tether in a predetermined orderly manner and prevent the tether from doubling back or figure eighting as it is laid down into the tank in the manner, the cylindrical wall being coated with the layer; and

a power roller, pulley and guide arrangement adapted to lay the tether through the center of the open top surface into the tank at a predetermined speed in one direction only.

Preferably, in accordance with this invention, the layer is a Teflon coating.

Typically, in accordance with this invention, the power roller is adapted to spin either clockwise or counter clockwise to lay the tether into the tank.

Preferably, in accordance with this invention, the power roller is adapted to be raised or lowered into the tank and further adapted to raise or lower the center pillar to minimize the distance of fall of the tether from the roller to the tank.

Preferably, in accordance with this invention, the tether is stored in a tether storage system as described herein above.

A wheeled vehicle or a watercraft may be driven by a gyroglider in accordance with the present invention.

Preferably, in accordance with this invention, the capstan is connected to the converter via a clutch and flywheel, the clutch and flywheel are adapted to regulate the RPM and torque at the input to the converter.

Particularly, the controller is adapted to control the gyroglider in response to a navigation system associated with the gyroglider, the navigation system being selected from the group consisting of global positioning system and omni beacon detector, adapted to avoid interference with the navigation system associated with the other gyroglider.

Preferably, in accordance with this invention, the controller is adapted to control the gyroglider in response to a navigation system associated with the gyroglider, the navigation system being selected from the group consisting of global positioning system and omni beacon detector, adapted to avoid interference with the navigation system associated with the other gyroglider.

Preferably, in accordance with this invention, the gyroglider apparatus as described herein above further comprises:

means to vary bank angle of the rotor defined by the angle between the gyroglider's normal axis and the Earth's vertical plane containing the gyroglider's longitudinal axis; and

means to manage shunting of the gyroglider, the means being adapted to maneuver the gyroglider cross wind such that a cross range velocity is induced and further adapted to induce a relative wind on the rotor in excess of ambient wind resulting in tension in the tether.

In accordance with the present invention, there is envisaged a method of power generation, the method comprising the steps of:

providing at least one gyroglider comprising a rotor with a plurality of rotor blades rotatably secured to a frame, the rotor having a rotor pitch defined by a path of the rotor with respect to the incoming wind and a blade pitch defined respectively for each of the rotor blades by the angle of the blade with respect to the incoming wind;

providing a tether wound on a capstan, the tether having a first end and a second end;

positioning the first end of the tether proximate the earth and the second end extending aloft,

securing the gyroglider on the tether at the second end thereof;

connecting the capstan to a converter;

measuring tension existing in or added to the tether;

measuring the wind speed to which the gyroglider is exposed;

cyclically monitoring the tension in the tether to generate an output state of the tension;

flying the gyroglider against the tension in the tether by:

selectively controlling the rotor pitch if the output state indicates a value too low or too high with reference to a predetermined range;

selectively controlling the blade pitch if the output state indicates a value too low or too high with reference to the predetermined range;

controlling the tension in the tether by cyclically reeling in the tether by operating the converter or paying out the tether by operating the converter in reverse, if the output state indicates a value way too low or way too high with reference to the predetermined range; and

converting rotational energy from the capstan to power.

Preferably, the step of securing the gyroglider on the tether includes spacing apart the gyroglider from the other the gyroglider in a series on the tether in the event there are more than one gyrogliders.

Preferably, the step of flying the gyroglider against the tension in the tether includes controlling the gyroglider by an autopilot.

Typically, the step of flying the gyroglider against the tension in the tether includes controlling the gyroglider by an autopilot in response to a position thereof detected by a navigation system associated with the gyroglider without interference from the navigation system associated with other the gyroglider in the event there are more than one gyrogliders.

Typically, in accordance with this invention, the step of selectively controlling the rotor pitch is coupled to the step of selectively controlling the blade pitch.

Preferably, in accordance with this invention, the step of selectively controlling the rotor pitch comprises the steps of:

providing a mast co-linear with an axis of rotation of the rotor; and

controlling a tilting angle of the mast with respect to the frame.

Preferably, the step of selectively controlling the rotor pitch comprises controlling both roll and pitch of the gyroglider.

Additionally, the step of selectively controlling the rotor pitch comprises controlling pitch of the gyroglider.

Typically, the step of selectively controlling the blade pitch comprises passive controlling by biasing each blade to an upward position by providing biasing elements in the form of resilient elements for effecting pivoting of the blades towards the axis of rotation.

Typically, the step of selectively controlling the blade pitch comprises countering the urging of a biasing element provided for each of the blades by the centrifugal force urging a leveling of the blades in response to an increase in the speed of rotation of the rotor about the axis of rotation. Alternatively, the step of selectively controlling the blade pitch comprises active controlling by biasing each blade to an upward position by providing biasing elements in the form of servo actuators for effecting pivoting of the blades towards the axis of rotation.

Preferably, in accordance with this invention, the step of selectively controlling the blade pitch includes both active and passive control of the blade pitch.

In accordance with this invention, the step of controlling the tension in the tether includes reducing the tension by reducing the blade pitch and increasing the tension by increasing the blade pitch.

Preferably, according to an aspect of the invention, the step of selectively controlling the blade pitch includes reducing and increasing, respectively the rotor pitch.

Preferably, in accordance with this invention, the above described method further comprises:

pre-rotating the rotor in the incoming wind by setting the blade pitch at a negative value; and

transferring momentum between the incoming wind and the blades, the rotor operating as at least one of a windmill and a wind turbine.

The method of power generation further comprises active controlling of the gyroglider by selectively pivoting the blades between a turbine position having a negative blade pitch and a gyroglider position having a positive blade pitch.

The method of power generation still further comprises:

providing a gimbal secured to the rotor to support rotation of the rotor therearound; and

pivoting the gimbal to pitch with respect to the frame.

Preferably, the step of selectively controlling the rotor pitch comprises providing a gimbal that pitches about a pivot with respect to the frame such that the ratio of lift to drag of the rotor is equal to the ratio of the length to the height of the offset of the center of rotation of the rotor imposed by the distance from the axis of rotation to the pivot, and the height of the center of rotation above the pivot, respectively.

Preferably, the method of power generation further comprises reeling in the gyroglider, by the capstan, in response

to a reduction in the speed of the incoming wind below a threshold value. It also includes reeling in the gyroglider at a relative velocity selected to fly the gyroglider substantially to the capstan under a controlled flight.

In accordance with the present invention, the method of power generation also comprises flying the gyroglider substantially to the capstan in response to the speed of the incoming wind dropping beyond a threshold value required for at least one of a controlled flight and power generation.

The method of power generation further comprises managing the tension in the tether by the rotor responding thereto, the rotor blades moving to a position of decreased blade pitch in response to increase in the tension and an increase in blade pitch in response to a decrease in the tension.

In accordance with an aspect of this invention, the step of selectively controlling the blade pitch comprises coupling the blade pitch to a coning angle of the blades in the rotor, the coning angle representing an angle between an axis of the blade and the axis of rotation of the rotor.

In accordance with another aspect of this invention, the step of selectively controlling the blade pitch comprises coupling the blade pitch to a coning angle of the blades in the rotor, the coning angle representing an angle between an axis of the blade and the axis of rotation of the rotor; and effecting a change in the coning angle by changing the balance of forces acting on the blades between the tether and the incoming wind.

In accordance with the present invention, the method of power generation further comprises:

providing legs secured to the frame;

locating a landing surface proximate the capstan, the landing surface defining a surface in space;

extending the tether from the capstan through the surface in space;

drawing the tether, by the capstan, through the surface in space;

contacting the landing surface by at least one of the legs for landing the gyroglider on the landing surface; and

positioning the rotor to rotate in a plane parallel to the landing surface by tilting the frame, by at least one of the legs, in response to the contacting the landing surface.

In accordance with the present invention, the method of power generation further comprises:

positioning instrumentation on the frame; and

maintaining the gyroglider aloft at a substantially fixed altitude as a high-altitude tower.

Preferably, in accordance with this invention, the step of selectively controlling the rotor pitch includes controlling the rotor pitch in response to increasing proximity of the rotor to the ground during landing.

The method of power generation further comprises:

providing a plurality of gyrogliders secured to the tether with a single capstan, all of the gyrogliders operably connected to deliver power;

flying the plurality of gyrogliders aloft;

flying the plurality of gyrogliders down to a landing surface;

retrieving each of the gyrogliders of the plurality of gyrogliders individually and one at a time;

removing each of the gyrogliders from the tether individually and one at a time;

selectively removing each of the frames from the associated rotor;

stacking the rotors in close proximity to each other separated by a padding for storage; and

redeploying each of the plurality of gyrogliders with the frame and its associated rotor.

In accordance with one more aspect of the present invention, the method of power generation further comprises:

providing motive means selected from the group consisting of jets, propellers, and motors, the motive means being secured to the blades;

detecting an emergency situation; and

operating the motive means to maintain a controlled flight of the gyroglider.

The method of power generation further comprises storing the tether comprising the steps of:

providing a cylindrical tank having an open top surface and closed cylindrical wall having a diameter slightly larger than the natural coiling diameter of the tether;

coating a layer on the cylindrical wall to reduce friction and heat buildup;

providing a center pillar coaxial with the tank;

defining a storage space between the tank and the pillar, the storage space being just adequate to lay down the tether in a predetermined orderly manner; and

lowering the tether into a the storage space at a predetermined speed in an orderly manner using a roller, pulley and guide arrangement operating in a manner selected from the group consisting of movable assembly or fixed and spinning assembly.

Preferably, in accordance with this invention, the step of flying the gyroglider against the tension in the tether further comprises:

maintaining the rotor pitch to be constant;

varying bank angle defined by the angle between the gyroglider's normal axis and the Earth's vertical plane containing the gyroglider's longitudinal axis;

cross wind maneuvering of the gyroglider such that a cross range velocity is induced;

inducing a relative wind on the rotor in excess of ambient wind; and

shunting of the gyroglider.

BRIEF DESCRIPTION OF ACCOMPANYING DRAWINGS

The foregoing features of the present invention will become more fully apparent from the following description and appended claims, taken in conjunction with the accompanying drawings. Understanding that these drawings depict only typical embodiments of the invention and are, therefore, not to be considered limiting of its scope, the invention will be described with additional specificity and detail through use of the accompanying drawings in which:

FIG. **1** is a schematic representation of a gyroglider system **10** in accordance with a first embodiment of the present invention, including one or more gyrogliders, flying against the tension of a tether connected to a capstan, generating power based on the cyclical pulling on the tether from a distance at a tension force and retreating back down against a lower force by flying the gyrogliders in a reduced lift orientation;

FIG. **2** illustrates the net resultant of the forces of lift, drag, and gravity with respect to the rotating blade of the rotor of FIG. **1**;

FIG. **3** is a schematic diagram illustrating the gyroglider of FIG. **1** provided with a rudder and an elevator in accordance with an embodiment of the present invention;

FIG. **4** is a schematic diagram of a system in accordance with FIG. **1** including multiple gyrogliders attached to a

single tether and together providing a net tension in the line as seen by the capstan and power generation system (converter) connected thereto;

FIGS. **5**A-**5**C are side elevation views of a specific embodiment of a gyroglider in accordance with the invention in various attitudes of flight ranging from stabilized, almost level flight to an aggressive attitude to an initiation or gyroglider position for launching;

FIG. **6** is a perspective of one embodiment of an apparatus using a minimum fuselage, an open frame, for a gyroglider tethered to the system of FIG. **1**, and incorporating both roll and pitch control between the tether and the frame of the gyroglider;

FIG. **7** is a perspective view of an alternative embodiment of the gyroglider for use in a system in accordance with the invention, including spur gears operating on tracks, the tracks disposed along the frame of the gyroglider aircraft in order to control pitch and roll orientations of the aircraft frame. While this embodiment also includes a 'resting' location in the tracks devoted to aircraft pitch control, the tracks change radius in order to provide a preferential pull location to which the aircraft frame may tend, due to the lower location thereof in the track;

FIG. **8** is a perspective view of an alternative embodiment of a rotor, and includes a frame reduced to a minimum mechanical structure secured to a tether, and providing for pitch control by an actuator acting between the minimalist frame and a boom connected to an inner, substantially stationary, bearing system of a hub of the gyroglider;

FIG. **9** is a perspective view of an alternative embodiment of the apparatus of FIG. **8**, including a pass-through of the tethered line to secure another gyroglider at higher altitude on the same tether;

FIG. **10** is a perspective view of an alternative embodiment of the gyroglider, similar to the apparatus in FIG. **6** having a tiltable deck that pitches with respect to the main frame, in order to provide additional control of the rotor angle of attack or rotor pitch with respect to the incoming air stream;

FIG. **11** is a top plan view of one embodiment of a rotor using pivots canted away from perpendicular to a radius from the center of the hub, in order to provide a coupling of the flapping or hinged action of the individual blades, with the change of the blade angle of attack;

FIG. **12** is a top plan view of an alternative embodiment of the apparatus in FIG. **11**, showing optional power generation schemes, including magnets and coils, as well as an optional jet, where the coils and jet need not be used in combination, but rather the coil system may provide auxiliary electricity for operating supporting equipment such as controls or autopilot on board the rotorcraft, while a jet may be used for controlling flight during startup, flydown, or the like;

FIG. **13** is a top plan view of an alternative embodiment of a rotor, including the central hub, the pivot points between the tubes or anchors on the hub and the rotor blades, in this case having hinge axes perpendicular to a radius from the center of the hub, but the blades themselves canted at an angle forward in the leading edge direction instead of on the radii emanating from the hub;

FIG. **14** is a perspective, partially cut away view of an alternative embodiment of a rotor, with the blades truncated in order to expand the viewing size of the hub, the hub including anchors that serve the purpose of a clevis to hold the trunnions for connecting the respective blades, and the blades pivoting about pivot pins passing through the anchors;

FIGS. **15**A-**15**B are side elevation views of an alternative embodiment of the gyroglider in accordance with the invention, having a tethered frame supporting a rotor, and including biasing elements such as springs, mechanical actuators, servos and the like, in order to bias each blade to an upward position, the upward position thus coupling, due to a canting of the blade or the pivot of the blade, the blade angle of attack to the coning angle or the rise angle of each blade with respect to the hub, outside of the normal theoretical plane of rotation of a hub and blades of the rotor;

FIGS. **16**-**17** are perspective views of a launching and landing structure illustrating several optional developments in order to assist in launching and landing gyroglider of systems in accordance with the invention, these systems providing an optional turntable to support turning the gyroglider into the wind or allowing the vertical rudder vane of the gyroglider to turn the gyroglider and the turntable into the wind to begin or terminate flight, this structural system also including a pivoting landing deck supported on the turntable to permit landing legs of the gyroglider to contact the landing deck without requiring that the gyroglider rotor change its angle of attack with respect to the incoming wind at landing, rather the gyroglider can land at a particular angle suitable to the angles of the tether and rotary wing, after which the gyroglider may be secured to the landing deck, and the landing deck may be tilted to an appropriate angle for storage, service, or the like;

FIG. **18** is a perspective view of an alternative embodiment of the gyroglider system in accordance with the invention, illustrating the capstan and a motor-generator system connected thereto, this capstan system also includes a storage reel in order that the gyroglider be drawn down to the ground, or flown down towards the ground, and may be disassembled, the rotors remaining threaded on the tether for compact storage, while the frames or fuselages of the gyroglider may be removed for storage to a different location or a nearby location;

FIG. **19** is a perspective view of one embodiment of the gyroglider of FIG. **18**, illustrating more details of the connection scheme between the frame and the rotor;

FIG. **20** is a flow diagram of a control scheme for managing tension in a tether of an invention of an apparatus in accordance with the invention;

FIGS. **21**A-**21**D are the top plan view of a frame of the gyroglider, a side elevation view, a front elevation view and a perspective view of the same gyroglider, respectively, relying on a bridle system to both connect the tether to the gyroglider for generating power, as well as to control the pitch, roll, or both of such an gyroglider by drawing and releasing the bridle cords or lines that connect to the various and extreme aspects of the gyroglider;

FIG. **22**A illustrates a rope tank storage device in accordance with the present invention with a power roller that spins either clockwise or counter clockwise to lay the tether into the tank;

FIG. **22**B illustrates a rope tank storage device in accordance with the present invention with a power roller that raises or lowers a center pillar to minimize the distance of fall of the tether into the tank;

FIG. **23** illustrates the gyroglider apparatus in accordance with an embodiment of the present invention with the Center of Gravity (CoG) weight shift and an alternate upside down horizontal stabilizer to control flight stability;

FIG. **24** illustrates a landing/launching fixture that allows the gyroglider apparatus in accordance with the present invention to take off or land on a single fixture that could be located on a building, a barge or a boat;

FIG. **25** illustrates roll control for a gyroglider apparatus with two line bridles in accordance with an embodiment of the present invention;

FIG. **26** illustrates the gyroglider apparatus in accordance with the present invention being provided with a flywheel and clutches to even out the power generated;

FIG. **27**A illustrates a graphical representation of a comparison of the relative wind experienced by the gyroglider in accordance with the present invention, with and without cross wind maneuvering;

FIG. **27**B illustrates a graphical representation of rotor bank angle of the gyroglider in accordance with the present invention versus time during a cross wind maneuver;

FIG. **27**C illustrates a graphical representation of rotor pitch of the gyroglider in accordance with the present invention versus time during a cross wind maneuver;

FIG. **27**D illustrates a graphical representation of the cross range versus down range of the gyroglider in accordance with the present invention during a cross wind maneuver; and

FIG. **27**E illustrates a graphical representation of the attitude versus cross range of the gyroglider in accordance with the present invention during a cross wind maneuver.

DETAILED DESCRIPTION

It will be readily understood that the components of the present invention, as generally described and illustrated in the drawings herein, could be arranged and designed in a wide variety of different configurations. Thus, the following more detailed description of the embodiments of the system and method of the present invention, as represented in the drawings, is not intended to limit the scope of the invention, as claimed, but is merely representative of various embodiments of the invention. The illustrated embodiments of the invention will be best understood by reference to the drawings, wherein like parts are designated by like numerals throughout.

Autogyro aircraft are described in considerable detail in U.S. Pat. No. 5,301,900 to Groen et al. which patent is incorporated herein by reference. Likewise, numerous patents of de la Cierva, Pitcairn, Barltrop and others have attempted to capture wind energy.

The embodiments of the present invention are explained herein below with reference to the accompanying drawings. The term 'wind' in this specification is used to refer to a fluid with current such as air, moisture laden air and liquids including water.

Referring to FIG. **1**, while referring generally to FIGS. **1-21**, at least one gyroglider **12** is secured by a tether **14**. Gyroglider **12** as referred to in the specification would mean one or multiple gyrogliders forming a gyroglider system. The tether **14** is formed of a natural or synthetic material. The tether **14** is a steel cable or synthetic polymeric fiber braided into ropes. For instance, the Dyneema™ brand cord can be braided into ropes of different diameters. Ultra high strength, ultra high thermal and flame resistance fiber like Dupont's M5 rope and carbon nanotube rope can also be used as a tether. Such materials provide extremely long life, durability, high strength, suitable wear characteristics, and have substantially lighter weight than steel cables and the like.

The tether **14** is wound around a take—up device or capstan **16** which is preferably in the form of a reel, spool, sheave, and the like. The capstan **16** is adapted to provide a mechanism for taking in the line of the tether **14** and laying it systematically and uniformly in layers. Sophisticated technologies in the wire and cable industry, the design of fishing reels, and the like have dealt with the problem of reeving line onto a spool, pulley, or reel in a neat, orderly, and removable fashion.

A "rope tank", "rock climbers or fire rescue rope bag" concept of tether storage includes a rope bag which is a precisely sized fully enclosed bag with a very small opening for the rope to be fed into and pulled out of the bag. If a 100 m rope is fed in through a small opening, it does not entangle and can be pulled out through the same hole. The rope is arranged in the bag such that the first end of the rope fed in the hole will be the last end to be pulled out.

Traditional rope/tether storage methods involve wrapping the tether onto a large rotating spool with a level winder mechanism that insures the rope is laid down in neat rows and does not get twisted. Traditionally known tether storage methods when used with the gyroglider apparatus in accordance with the present invention poses multiple problems. Firstly, in all embodiments of the present invention, the tether goes through a few wraps around a capstan for converting the high line tension into rotary power that is used to generate power. The capstan is also used in reverse wherein a motor rewinds the tether. After being wound through the capstan, the line has little tension left. The full length of approximately 10 km of tether weighs up to 25,000 kilos. After leaving the capstan, if the tether is wound onto a large spool with a level winding mechanism as known in the art, the spool needs to be very large and that results in wastage of a lot of power for careful winding in and winding out all of this weight at speeds upwards to 40 km/hr. Braking the momentum is also an issue when conventional rope storage methods are used in the gyroglider apparatus of the present invention.

In accordance with the present invention, a rope tank is envisaged to solve the above mentioned drawback of the prior art as illustrated in FIGS. **22**A and **22**B. After the tether **14** runs through a capstan winch **16** and the high tension is removed, the tether **14** is stored in a round cylindrical tank **2** with the help of gravity. The tether **14** is fed in to the tank **2** with the aid of a power roller, pulleys and guides. The circumference of the tank **2** is precisely predetermined to be slightly larger than the natural coiling diameter of the tether **14**. For instance, the natural coiling diameter of a tank with 5 cm thick tether is 1.5 meters in diameter. So the tank is designed to have 1.6 meters diameter and the height of the tank is decided to be adequate for the amount of rope to be stored, say 10 meters high. A center pillar **4** with a cylindrical wall is provided coaxially in the larger 1.6 meter diameter tank. The center pillar **4** is designed to have approximately 0.5 meters diameter to prevent doubling back or figure eighting of the tether as it is laid down into the tank **2**.

The power roller **6** that feeds or "spits" the tether **14** into the tank **2** is provided on approximately the top of the center pillar **4**. In accordance with the embodiment illustrated in FIG. **22**A, the power roller **6** rotates clockwise or anticlockwise to feed in or draw out the tether **14** through the void between the two cylinders. The cylinders are provided either underground or as part of the tower or the buoy or ship.

When the out-bound power stroke begins, the tether **14** is pulled back out of the tank **2** with the power roller **6** keeping back tension on the capstan **16** for good power transfer. For the in-bound rewind stroke the capstan **16** pulls the tether **14** down and the power roller **6** still keeps back tension on the capstan **16** but also spits the tether **14** down into the cylinder **2** in a circular pattern. This tether storage system uses very little power. The sides of the tank **2** and the walls of the

center pillar **4** are coated with Teflon or other friction reducing coating to minimize friction and heat buildup with the tether. Thus heat dissipation is quick and there is practically no momentum; tether pull out or release can thus be instantly reversed. The rope tank in accordance with the present invention is a very simple and economical means to store the tether. Furthermore, since heat dissipation is taken care of, the life of the tether is not compensated by the storage means.

In accordance with the embodiment illustrated in FIG. **22**B, the power roller **6** and hence the center pillar **4** are raised or lowered inside the rope tank **2** to minimize the distance the tether **14** falls from the power roller **6** to settling in the bottom of the tank **2**. By keeping the distance of fall of the tether short, chances of tangling of the tether **14** is considerably reduced.

A connector **17** physically connects the capstan **16** to a converter **18**. The converter **18** is typically a means that can suitably convert rotational energy from the capstan **16** to a transmissible form, a storable form, or both. Accordingly, the converter **18** is an electrical generator, a hydraulic motor or a gas compressor. When the converter **18** is an electrical generator, the rotary power delivered by the capstan **16** through the connector **7** is converted into electrical power suitable for introduction back into the electrical grid of a local, state, or national electrical distribution infrastructure.

The system **10** operates by flying the gyroglider **12** upward against tension created in the tether **14**. Accordingly, force, operating through a distance, creates energy. That amount of energy delivered over a period of time constitutes power. The connector **17** delivers power to the converter **18** based on the tension in the tether **14** and the rotary motion of the capstan **16**. Thus, the gyroglider **12**, flown by virtue of its lift, applies a force on the tether **14**, which is delivered as power based on the payout of the tether **14** by the capstan **16** against the resistance of the converter **18**.

The gyroglider **12** is retrieved by the tether **14** by operating the converter **18** in reverse. For instance, if the converter **18** is a motor-generator apparatus, it operates as a motor when current is delivered to it and as a generator when mechanical force is applied to it and a load is connected electrically to draw the electricity from the apparatus operating in generator mode. The gyroglider **12** is piloted using a computerized control mechanism or in an autopilot mode. In a cyclically alternating operation (motor mode and generator mode), the converter **18** operates as a motor in one mode, while the automatic controls on the gyroglider **12** effectively fly the gyroglider downward, maintaining only a minimal amount of tension on the tether **14**.

Thus, the net gain of energy results from a comparatively larger tension in the tether **14** exerted by one or more gyrogliders **12** being lifted on the tether **14** and thus applying a force thereto, in contrast to the comparatively lighter force maintained in the tether **14** as one or more gyrogliders **12** are flown back closer to the earth in order to retrieve the tether **14** on the capstan **16**.

Thus, a comparatively large force is applied during payout of the tether line **14**, providing power. A comparatively small amount of power is used in reeling in the tether line **14** on the capstan **16** in preparation for another lifting flight by the gyroglider **12**.

In the illustrated embodiment of FIG. **1**, the direction of the wind **20** is generally considered as operating parallel to the surface of the earth and the gyroglider **12** will typically be oriented to fly 'into' the direction of the wind **20**.

The gyroglider **12** includes a fixed wing aircraft. In a preferred embodiment of the present invention, each gyroglider **12** includes a rotary wing, referred to as a rotor **22**. The rotor **22** operates by spinning resulting in auto rotation. The rotor **22** rotates in a substantially planar region about the plane of rotation **28**. Practically, some rotors may have degrees of flexibility that permit them to literally operate in a somewhat conical configuration at times.

In general, the tether **14** extends in a direction **24**. The direction **24***a* represents the outward direction of payout of the tether **14** as the gyroglider **12** operates in a maximum lift orientation to draw the tether **14** out from the capstan **16**. The direction **24***b* represents the direction in which the tether **14** reels in under minimum tension while the gyroglider **12** is caused to fly downward with a minimum lift.

Practically, the direction **24** may change slightly along the path. The tether **14** does not have zero weight. Accordingly, the tether will not travel along an exactly straight line but may suspend as a catenary. Nevertheless, at any point along the tether **14**, a direction **24** is established.

The direction **24** also helps establish an angle **26** between the direction **24** of the tether **14**, and a datum, such as the surface of the earth. As such, the wind direction **20** establishes an angle **26** with the tether direction **24**. The angle **26**, thus, defines a relationship with the relative wind direction **20**.

Typically, the rotor **22** and the plane of rotation **28** form an angle **30** with the direction of wind **20**. Thus, the gyroglider **12** relies on the positive angle **30** for the air to pass up through the rotor, thus windmilling or auto-rotating the rotor **22**. The auto-rotation of the rotor **22** by the wind **20** treats each blade **32** (FIG. **2**) of the rotor **22** like the wind treats the sail of a boat. The net momentum transfer to the blade **32** (FIG. **2**) by the wind **20** as the wind changes direction motivates the blade **32** to (FIG. **2**) to move in a direction opposite from the direction in which the wind is deflected.

Thus, the rotation of individual blades **32** (FIG. **2**) of each rotor **22** gives a net velocity to each blade **32** (FIG. **2**). Each blade **32** (FIG. **2**) is formed as an air foil causing the air flowing over the top of the blade **32** to travel faster than the air flowing under the blade **32**. According to the Bernoulli Effect, there will be less pressure on the top than on the bottom of the blade **32**, resulting in a lift force on the blade **32**. Thus, each rotor **22** is moved forward like a windmill by the wind passing upward through the rotor **22** from the underside thereof.

Referring to FIG. **2**, the blade **32** of the rotor **22** typically rotates in a plane about the plane of rotation **28**. When the rotor blade **32** rotates at a very low speed, the incoming wind **20** alters the pitch of the blade **32**, or the blade angle of attack **40**. Thus, the rotor **22**, if it relies on blades that are free to flap up and down throughout some range of motion on a hinge, may actually form something of a cone, rather than a plane.

Nevertheless, any point on the rotor blade may be thought of as rotating in a particular plane. Thus, when one views the blade **32** of FIG. **2**, with its axis of rotation **34**, the forward direction **36** in which the blade travels stands opposed to the retreating direction **38** that the blade travels in the course of its rotation.

Thus, the incoming wind **20** below the blade **32** results in a blade angle of attack **40** describing the very local pitch of the blade **32** with respect to the incoming wind. The blade angle of attack **40** may be thought of as the chord direction **42** with respect to the wind direction **20**. That angle **40** establishes the blade angle of attack **40**.

According to Bernoulli Effect, as described by the Bernoulli equation, the passage of the wind **20** over the top of

the blade **32** results in a reduction of pressure on the upper side of the blade **32**, thus generating a lift force. The lift force **46** acts upwardly while the wind **20** also asserts a certain amount of drag against the blade **32**. Thus, the blade is subjected to a drag force **44** in the direction of the wind **20**, while the lift force **46** operates substantially perpendicularly thereto, tending to lift the blade **32**.

In general, one may think of wind as operating within the nap of the Earth, and therefore operating substantially horizontally with respect to the Earth. In the illustration of FIG. **2**, the force of gravity is not aligned with the axis of rotation **34** of the blade **32** and rotor **22**. Rather, the gravitational force **48** operates as shown in FIG. **2**, because the blade **32** is typically oriented with a positive angle of attack **40** with respect to the incoming wind, which wind must come through the bottom side or face of the blade **32**.

The resultant force **50** becomes the net force on the blade **32**, and the combination of the forces **50** on the various blades **32**, whether 2, 4, 5, or more, then results in an ultimate force. The direction of flight of the gyroglider **12** is generally against the incoming wind **20**. This is for the same reason that the wind direction is substantially parallel to the Earth.

For example, an aircraft travels at an altitude with respect to the surface of the Earth. In a free flying gyroglider, without the tether, the net resultant force is upward due to the lift force, but backward, contrary to the direction of motion, as a result of the drag force. In a free flying aircraft, the drag force is overcome by the force of a tractor motor in front of or behind the aircraft. In accordance with the present invention, the tether **14** and the tension therein provide the force resisting both the upward lift force **46**, and the drag force **44**. Accordingly, the resultant force **50** is the force available to lift the gyroglider and also to support the tension in the tether **14**.

Referring to FIG. **3**, the gyroglider **12** is provided with a frame or fuselage **52**. A frame generally provides support for a load, equipment, and the like. Such a frame when provided with a skin is often referred to as to fuselage. Nevertheless, the terms frame and fuselage are used interchangeably in this specification and generally referred to by the numeral **52**.

In accordance with an embodiment of the invention, the frame or fuselage **52** includes a vane or rudder **54**, and an elevator **56**. The rudder **54** operates as a vertical vane, while the elevator **56** operates as horizontal vane.

By mounting the rudder **54**, the elevator **56**, or both near one extremity of a boom **58** (FIG. **4**), with the opposite end of boom **58** (FIG. **4**) secured closer to the frame or fuselage **52**, each of the vertical vane **54** and the horizontal vane **56** obtain greater leverage to orient the fuselage or frame **52** with respect to the wind **20** and rotor **22**. In certain embodiments, the rotor **22** rotates on or about a mast **60** (FIG. **4**). The mast **60** (FIG. **4**) operates to secure the rotor **22** to the fuselage **52**.

Since the rotor **22** operates as a rotary wing, no power needs to be transmitted through the mast **60**. Thus, the rotor **22** rotates on a bearing fixed at its inner race to the mast **60** (FIG. **4**). Alternatively, the mast is supported on a system of bearings so that the mast **60** (FIG. **4**) itself is permitted to pivot or even rotate with the rotor blades **32**.

Referring to FIG. **4**, while continuing to refer generally to FIGS. **1-21**, multiple gyrogliders **12** are connected to the tether **14**. The various gyrogliders **12** are 'threaded' on to the tether **14**. Each gyroglider **12** is flown aloft, by securing it to the tether **14**, and being lifted by the previously lofted gyroglider **12**.

Typically, the blade angle of attack **40** for the blades **32** of each of the rotors is set at a sufficiently low or even negative angle of attack **40** to encourage autorotation. Thereafter, as the rotor **22** begins to turn at an appropriate rate, the blades **32** tend to extend straight out in a plane of rotation **28**, with each blade **32** operating at the angle of attack **40** selected.

The angle of attack **40** of an individual blade tends to control the lifting force **46** applied by overflowing air to that blade. The increase in the rotor angle of attack **30** tends to increase the drag, by presenting a greater projected area of the rotor **22** to the incoming wind **20**. Thus, in order to initiate autorotation, the gyroglider **12** near the ground is tilted to provide a greater angle of attack **30** corresponding to the entire area of the rotor projected onto the wind direction.

Practically, multiple gyrogliders **12** connected to the tether must each be lifted off or flown upward, after which another gyroglider is launched. If an array of gyrogliders **12** is set up along a horizontal surface, each could lift the subsequent one located beside it, as the relatively upward or higher adjacent gyroglider **12** increases the tension in the tether **14** between itself and the next adjacent gyroglider **12**. Then the lower or comparably lower gyroglider would be lifted up. Some difficulties with orientation and the like are solved by providing platforms, launch mechanisms, and the like in order to maintain proper orientation and minimize any sudden load applied to the gyroglider **12**.

Nevertheless, by controlling the rotor angle of attack **30**, autorotation is initiated as the blade **32** turns about a theoretical axis of rotation **34** that is exactly horizontal. It would effectively act as a windmill as used in earthbound systems. Thus, somewhere between a horizontal axis of rotation **34**, and a vertical axis of rotation **34**, is a suitable startup angle for the rotor **22** in order to begin autorotation driven by the incoming wind **20** there below.

As the rotor **22** increases its angular velocity, the blade angle of attack **40** is reduced, and the rotor angle of attack **30** is also reduced. In some embodiments, such as the 'delta' rotor concept, the rotor angle of attack **30** and the blade angle of attack **40** are coupled. In other embodiments, the rotor angle of attack **30** is controlled completely separately from the blade angle of attack **40**.

The multiplicity of gyrogliders **12** pulling against the tether **14** will apply a cumulative force equal to all of the total lifting forces **46**, against all of the combined drag forces **44**, thus providing a net resultant lift force **50** on the tether **14** as applied by all of the gyrogliders **12** flying there above.

Referring to FIGS. **5A-5C**, while continuing to refer generally to FIGS. **1-21**, the gyroglider **12** in one embodiment is oriented by controlling the pitch of the gyroglider **12**. For example, as illustrated in FIG. **5A** the rotor angle of attack **30** may be brought down to a value of zero or less with respect to incoming wind. In this arrangement, the gyroglider **12** will slowly drift out of the sky. The only lift force will be by virtue of rotation of the rotary wing or rotor **22** as a result of air passing over blades **32** of the rotor **22**. Also illustrated in FIG. **5A** is a hub **62** operating to rotate with respect to the frame **52** or fuselage **52** of the gyroglider **12**. Pivots **64** between each of the blades **32** and the hub **62** provide a "flapping" motion for each hinged blade **32**. Accordingly, each blade **32** rises to a desired angle with respect to the hub **62**.

A pinion or spur gear **68** operates along a track **66** to change the pitch of the gyroglider **12**. In this embodiment, the pitch of the aircraft controls the orientation of the hub **62**.

Accordingly, the blade angle of attack **40**, if coupled to the rotor angle of attack **30** will be affected by the pitching of the gyroglider **12**.

For example, referring to FIG. **5**B, in the illustrated attitude, the direction of the incoming wind **20** passes upward through the rotor **22**. At a sufficiently high speed, centrifugal forces tend to stress the blades **32** and motivate them to extend exactly straight out from the hub **62**. In the illustration of FIG. **5**B, the wind **20** passes through the rotor **22** and its associated blades **32** in an upward direction. Thus, the incoming wind **20** tends to auto rotate the blades. The blades, due to their selected blade angle of attack or blade pitch **40**, then begin to exert a lift on the frame or fuselage **52** as a direct result of the Bernoulli Effect. The pinion **68** is operated by a servo to travel along the track **66**, thus controlling the rotor angle of attack **30** of the gyroglider **12**.

Referring to FIG. **5**C, the gyroglider **12** in one embodiment of the system **10**, is pitched with the rotor **22** in an extreme attitude. For example, hinged blades **32** pivot at the pivots **64** between the blades **32** and the hub **62**. Accordingly, if the centrifugal force is small, due to the slow rotational speed, down to a zero rotational speed, then the drag force **44** acting on the blades **32** 'deflect' or lift the blades at the pivots **64** into more of a coning shape, rather than the familiar plane of rotation **28**, and push them around like a windmill.

Thus, the pinion **68** operating along the track **66** pitches the gyroglider in a very steep attitude with respect to the incoming wind **20**, thus causing the rotor **22** or the blades **32** to 'windmill' or auto rotate. The rising of the blades **32** on the pivots **64** away from the frame **52** of the gyroglider **12** results in a changed angle of pitch **40** of each of the blades **32**. Accordingly, in the absence of a positive angle of attack, the blades **32** provide no net lifting force **46**, while simply auto rotating (like sails of a boat or windmill) in response to the momentum transfer from the incoming wind **20**. As the rotational velocity or angular velocity of the rotor **22** increases, from the attitude of FIG. **5**C to the attitude FIG. **5**B the blade **32** has increased speed. Centrifugal forces will hold the blades **32** in full extension away from the hub **62** of the gyroglider **12**. In the illustrated embodiment of FIG. **5**, the rudder **54** operates to orient the frame **52** and thus the rotor.

Referring to FIG. **6**, while continuing to refer generally to FIGS. **1-21**, another embodiment of the system **10** in accordance with the invention relies on pitch controllers **70** operating along rails **66**. The rails **66** are either provided with teeth, or are smooth. In either event, rollers or pinions **68** within the controllers **70** operate to move the controllers **70** back and forth along the rails **66** of the frame **52**.

In the embodiment illustrated in FIGS. **5**A-**5**C, the rudder **54** exclusively pivots the gyroglider **12** with respect to the tether **14**. Unlike that, in the embodiment of FIG. **6**, the tether **14** is provided with another controller **72** to control the roll of the gyroglider, the controller **70** being a pitch controller. The roll controller **72** operates on a track **76** extending between the pitch controllers **70**. The frame maintains a spread angle **71** between the front and rear portions of the frame **52** that establishes the length or the circumference of the track **66** that is used for pitch control. Likewise, the angle **74** between the right and left portions of the frame **52** which acts as spread angle for providing roll control by the roll controller **72** operating along the roll track **76**. In the illustrated embodiment, the blade pitch angle **40** or blade angle of attack **40** is established independently from any other rotor angle of attack **30** that may be set for the gyroglider **12**.

In the illustrated embodiment, the blade angle of attack **40** is set for each blade **32** in order to assure that the rotor **22** will auto rotate. Thereafter, the blade angle of attack **40** is increased to a net positive angle with respect to the incoming wind **20** against the leading edge **77** of a rotating blade **32**, when the blade **32** is advancing forward in the same direction of the flight of the gyroglider **12**.

When the gyroglider **12** is tethered to the tether **14**, the advancing blade **32** has a leading edge **77** flying into the incoming air stream. Meanwhile, another blade **32** is a retreating blade **32**, retreating with a different relative wind, because the net relative air speed of the blade **32** is a combination of the speed of the gyroglider **12** with respect to the incoming wind **20** plus the respective velocity of the advancing blade **32** with respect to the frame **52**. Similarly, the retreating blade **32** travels in the retreating direction **38** illustrated in FIG. **2**. Thus, the velocity of the gyroglider **12** is positive with respect to the incoming wind **20**, while the blade velocity is negative with respect to the gyroglider.

In the illustrated embodiment, the rudder **54** and elevator **56** are used to orient or trim the gyroglider **12** to fly into the wind. Nevertheless, the roll controller **72** is used to control the side-to-side attitude of the aircraft and its associated rotor **22**. Meanwhile the pitch controllers **70** operate along the rail **66** to establish the rotor angle of attack **30** of the aircraft. As stated, the embodiment of FIG. **6** includes a controller either within the rotor, or attached to the hub **62** in order to individually alter the blade angle of attack **40** of each individual blade **32**.

The hub **62** is secured to a mount structure **60**, typically a mast. In certain embodiments, the mast **60** is provided with a spherical bearing, bushing, or journal within the main bearing assembly of the hub **62**. Thus, in certain embodiments, the hub **62** may stand off away from the frame **52** of the gyroglider **12**, and permit the rotor **22** to seek its own suitable angle of roll.

For example, because the leading edge **77** tends to operate at a higher relative velocity with respect to the incoming wind **20**, it tends to climb faster or fly upward to a greater extent. The relative wind velocity with respect to the forward moving or advancing blade **32** is the velocity of the gyroglider **12** with respect to the wind **20**, plus the relative velocity of the blade **32** with respect to the aircraft frame **52**. Thus, the forward speed of the gyroglider **12** adds to the forward speed of the rotating, advancing blade **32**.

In contrast, the retreating blade **32** has a net velocity with respect to the incoming wind **20** of the forward speed of the aircraft frame **52**, minus the linear velocity (angular velocity at a radius) resulting from the retreating blade. As a practical matter, the retreating blade relative velocity with respect to the gyroglider **12** is a speed in a backward direction. It is thus subtracted from the forward speed of the aircraft frame **52**. Thus, the rotational velocity of any point on each blade **32** is added to (for an advancing blade) and subtracted from (for a retreating blade) the forward airspeed of the frame **52** of the gyroglider **12**. Thus, the advancing blade **32** will tend to climb higher, while the retreating blade will tend to climb lower. There is a tendency for the rotor **22** to roll to a particular attitude with respect to the frame **52** that will leave the advancing blade extending upward at a higher angle, with the retreating blade extending downward at a lower angle with respect to the mast **60**.

A mount **79** on top of the mast **60** provides a platform for mounting various control equipment, communications equipment, and the like. For example, certain blade pitch control mechanisms are connected to the mount **79**. In other

embodiments, such blade pitch control mechanisms are connected directly to the hub **62** in order to rotate with the rotor **22** and the blades **32**.

Referring to FIG. **7**, in one embodiment of the gyroglider **12** in accordance with the invention, the track **66** is provided with a forward portion **66***a*, and an aft portion **66***b*. Between the fore **66***a* and aft **66***b* portions of the track **66**, is a detent or depressed area having a much smaller radius. Thus, the frame **52** of the gyroglider **12** is provided with a preferential position, favoring that particular orientation when restrained by a tether **14**. As with the embodiment of FIG. **6**, the embodiment of FIG. **7** has a leading edge **77** and a trailing edge **78** for each of the blades **32**. The leading edge **77** tends to be comparably bluff. By contrast, the trailing edge **78** tends to be very thin and sharp. This arrangement is dictated by the aerodynamics of the airfoil or rotor blades, particularly one that must provide lift, while minimizing drag.

Similar to the embodiment of FIG. **6**, the controllers **70**, **72** include appropriate wheels or pinions **68** to operate along the tracks **66**. Nevertheless, in this embodiment, the preferential "low spot" in the track **66** tends to leave the aircraft with a preferred position, maintained long term. Of course, the favored position is overridden by operating the controllers **70**, **72** in order to pitch the frame **52** and consequently the rotor **22** at a different angle with respect to the incoming wind **20**.

Referring to FIG. **8**, in another embodiment, a delta type of hinged rotor **22** employs pivots **64** between the hub **62** and the blades **32**. By constructing each of the pivots **64** to extend along a path that is canted with respect to a radius extending from the center of the hub **62**, the rotor angle of attack **30** is coupled to the blade angle of attack **40**.

The hub **62** of the gyroglider includes a bearing that provides reduced friction between the rotation of the rotor and the mast **60**. The bearings are provided with an inner race **82** substantially fixed with respect to the rotation or lack thereof of the mast **60** (see FIGS. **11-14** for details of the bearings). The inner race **82** does not have any appreciable rotation with respect to the mast **60**. Bearing rollers, whether they be thrust bearing rollers, ball bearings, Timken bearings, or the like operate between the inner race **82** and the outer race **86** containing them.

Therefore, in general, the bearings operate as the outer race **86** rotates about the inner race **82**, while rollers **84** roll therebetween. In alternative embodiments, the inner race **82** rotates, while the outer race **86** remains fixed, while the bearing rollers **84** roll therebetween reducing the friction of the relative motion. In the present embodiment, where the rotor **22** operates about a mast **60**, substantially fixed with respect to the frame **52**, the outer race **86** moves with respect to the frame **52**, while the inner race **82** remains substantially fixed with respect to the mast **60**.

In accordance with another embodiment of the present invention, a spherical bearing permits pivoting of the rotor hub **62** in order to accommodate the necessary roll angle for the tendency of the advancing blade **32** to fly up and the retreating blade **32** to fly down with respect to one another.

Referring to FIG. **8**, the direction **81** of rotation of the rotor **22** represents the rotation of the individual blades **32** in the rotational direction **81**. In an attitude of initial flight, at slow speed, the individual blade **32** lifts upward or away from the ground or the tethered direction on the pivots **64**. In the embodiments of FIGS. **7-9**, the hub **62** includes a mount **88** on the mast **60** to which the bearing **80** is substantially secured. The mount **88** is be fabricated as a spherical bearing or pivot, about which the bearing **80** pivots, but does not rotate.

Meanwhile, as the rotor angle of attack **30** is initiated, a comparably slow rotation by the rotor **22** results in drag forces **44** acting against the rotor blades **32** to lift them away from the tether **14**. Thus, the pivot **64** permits the individual blades **32** to windmill. However, upon pivoting of the blade **32** about the pivot **64**, both the blade angle of attack and the rotor coning angle are affected.

For example, upon lifting of the tip of any blade **32** with respect to the hub **62**, the blades **32** rotate in a conical sweep rather than a planar sweep. Furthermore, when the blade **32** pivots about the pivot **64**, the angle formed between the radius and the axis of one of the pivots **64** causes a certain twist or change in the blade angle of attack **40** of each blade **32**. Thus, any tendency of a blade **32** to fly up, or to be drifted up by the drag forces **44** of the incoming wind **20** tends to decrease the blade angle of attack **40**, thus increasing the net momentum transfer of the incoming wind **20** put into rotation or auto rotation (sometimes called windmilling) of the blades **32** and the rotor **22**.

In the embodiment of FIG. **8**, the actuator **90** includes a movable element **92**, and a housing **94** substantially fixed with respect to the frame **52** of the gyroglider **12**. Here, the frame **52** is little more than a mere tube secured about the tether **14**. Thus, the actuator **90**, by extending the movable element **92**, rotates the boom **58**, fixed to the inner race **82** of the bearing **80**. Accordingly, the inner race **82** is pivoted with respect to the mount **88**, thus changing the pitch **30** of the entire rotor **22**.

The rotor angle of attack **30** is modified by pitching the bearing **80** and the hub **62**. When the hub **62** is pivoted about the mount **88**, or when the entire frame **52** is pivoted as illustrated in FIGS. **5-7**, in the pitching direction, or to modify the rotor angle of attack **30**, the wind presents more drag against the underside of each of the blades **32**. Meanwhile, the vertical vane such as the rudder **54**, is also connected to the frame. Thus, the vane **54** maintains the orientation of the gyroglider **12** represented by the frame **52** and rotor **22** in the prevailing wind.

Typically, the profile or cross-section **95** of the individual blade **32** includes a spar **96** extending along the length of blade **32**. A spar **96** provides stiffness against bending forces within the blade **32**. In certain embodiments, the blade profile or cross-section **95** are solid. However, in most aircraft, the blade **32** is necessarily hollow to minimize weight. Thus, a spar **96** appropriately bisects or subdivides the chord of the airfoil or the rotor blade **32**.

The chord represents a line-extending from the leading edge **77** to the trailing edge **78**. The stiffness of the blade **32** along the chord is generally built into the skin, ribs, and so forth of the blade **32**. In contrast, the bending forces typically require the spar **96** to support the bending loads that will otherwise be imposed by the lifting force **46** acting on the upper surface of each blade **32**.

Referring to FIG. **9**, in accordance with another embodiment of the present invention, a plurality of gyrogliders is threaded on the tether **14** in a series along the length thereof. A suitable length of the tether **14** separates adjacent rotors **22**. Nevertheless, a frame **52** is constituted by a simple tubular structure fitted over the tether **14**, and fixed thereto in order to secure the gyroglider to the tether **14**.

Referring to FIG. **10**, the frame **52** of the gyroglider **12** is provided with a platform **100**. The platform **100** in previous embodiments is hardly visible at the top of the frame **52**. The small fraction of the upper platform, fixed to the remaining structure of the frame **52** can be seen below the rotor hub **62**.

In contrast, the embodiment of FIG. **10** includes an elongated platform **100** extending from a front end **103** to a

back end **101**. The region of the platform **100** near the front end **103** pitches about a pivot **102**. Thus, the pitch angle **30** or the rotor angle of attack **30** is modified, without necessarily pitching the angle or attitude of the frame **52** of the gyroglider **12**. A bias element **104** such as a spring, or the like, operates to urge the platform **100** into a particular attitude with respect to the remainder of the frame **52**.

A stop on the frame **52** restrains the platform **100** from dropping below a substantially horizontal position as illustrated in FIG. **10**. However, against the resistance or urging of the bias members or springs **104**, the back end **101** of the platform **100** lifts away from the remainder of the frame **52** in order to change the rotor angle of attack **30** established by the axis **34** of rotation about which the rotor **22** rotates.

The platform **100** extends away from the pivot **102**, placing the axis of rotation **34** at a distance **106**. This distance or length (L) **106** represents the offset **108** between the pivot point **102** through which the axis of rotation **34** would normally pass in the frame **52** and the actual axis of rotation of the rotor **22**. Meanwhile, the extension direction **105** of the pivoting of the platform **100** offsets the plane of rotation **28** of the hub **62** and rotor **22**. This distance **108** by which the plane of rotation **28** is displaced above the pivot **102** or the neutral position or horizontal position of the platform **100** is a vertical offset distance **108** (D). The proportion of lift to drag of the rotor **22** is reflected in the ratio of the distance (L) **106** with respect to the distance (D) **108**. Thus, the ratio of lift to drag is in the same proportion as the length **106** offset to the vertical displacement **108**.

Referring to FIGS. **11-14**, various embodiments of the hub **62** and the pivots **64** are employed. Likewise, various other accessories are implemented in the gyroglider **12** in accordance with the invention. For instance, in the embodiment of FIG. **11**, a rotor **22** rotating in the direction **81** includes the leading edge **77** that actually pivots at a smaller radius than the trailing edge **78**. This is because the pivot **64** is canted, rather than being perpendicular to a radius from the center of the hub **62** along the blade **32**. The chord **109** of each blade **32** lies perpendicular to the radius **111**.

Thus, because the angle of the pivot **64** is not parallel to the chord, the radius from the pivot **64** to the chord **109** is shorter along the leading edge **77**, and longer, comparably, between the pivot **64** and the chord **109** along the trailing edge **78**. Thus, one can see that the chord **109** changes its blade angle of attack **40** as the blade **32** pivots about the pivot **64**.

Whenever, the blade **32** pivots upward (out of the page) with respect to the pivot **64**, and the hub **62**, the leading edge **77** operates on smaller radius or distance between the pivot **64** and the chord **109**. Thus, in an upward motion the trailing edge **78** tends to sweep through a greater distance corresponding to a larger radius between the chord **109** and the pivot **64**.

This operation provides for greater negative angle of attack when the blades **32** are coned upward from the hub **62**. A lower angle of attack **40** for each blade **32** will exist when each blade **32** is spinning flat in a plane passing through the hub **62**. Thus, the blade angle of attack **40** is coupled to the pivoting of each blade **32** with respect to the pivot **64** and the hub **62**.

Referring to FIG. **12**, in accordance with one more embodiment, a generator **110** provides operational power needed to operate instrumentation and control equipment associated with the gyroglider **12**, and its rotor **22**. For example, power for operating an autopilot to fly the gyroglider **12** up or down is provided by onboard electricity from the generator **110**. The generator **110** is implemented by placing a coil fixed with respect to one race **82**, **86**, and a magnet attached to the opposite race **86**, **82**. Practically, the magnet **114** is a wound electro-magnet or a permanent magnet. The windings **112** are passed through the magnetic field created by the magnet **114** to create electrical current in the winding **112**. Thus, the generator **110** provides some amount of power to a local battery or the like in order to power various instrumentation, controls, and the like on the gyroglider **12**.

In accordance with yet another embodiment, emergency power is provided for launch, landing in undesirable conditions, and the like. Accordingly, jets **116** are placed near the extreme outer ends of the blades **32**. The jet **116** is activated by remote control from a ground station if necessary to spin up the rotor **22** of the gyroglider **12**, temporarily fly a particular gyroglider **12** with its rotor **22** downward in a non-wind condition, and the like.

Referring to FIG. **13**, while continuing to refer generally to FIGS. **1-21**, one embodiment of the rotor **22** in accordance with the invention includes a pivot **64** secured to the blade **32** that is itself extending away from the hub **62** but not along a radius.

For example, in the embodiment of FIG. **13**, the blades **32** themselves actually rely on the pivot **64** that extends perpendicularly across a radius **111** from the center of the hub **62**. The blade **32** creates a bending stress as centrifugal forces attempt to "straighten" the blade **32** along the radius **111**. The pivot **64** and the entire length of the blade **32** must resist such bending forces acting to align the blade **32** with a radius **111**.

In this case, the leading edge **77** again operates at a shorter value of a radius **111** from the center of the hub **62** compared to the trailing edge **78**. Accordingly, this configuration operates like that of FIGS. **11-12** in which the coning angle or the tendency of a blade **32** to lift up and operate in a conical configuration rather than flat planar configuration thus effects a change in the blade angle of attack **40** by virtue of such pivoting of the blades **32** about the pivots **64**.

In this case, the stub **98** or anchor **98** to which each blade **32** is connected by the pivot **64**, extends as a fixed element rigidly secured as part of the hub **62**.

Referring to FIG. **14**, as with the embodiments of FIGS. **5-13**, the anchors **98** are fixed to the hub **62** and rotate therewith. Meanwhile, the pivot **64** pivotably secures each blade **32** to the anchor **98**. A pin **118** extends through each anchor **98** to secure a trunnion **120** fixed to each blade **32**. In the illustrated embodiment, the pins **118** extend along a direction perpendicular to a radius **111** through the center of rotation or axis or rotation **34** of the hub **62**.

Likewise, the rotor **22** is formed to tilt about the mast **60**, and is adapted to be secured to a mount **88**, such as a spherical bushing or spherical ball connector. Accordingly, the rotor angle of attack **30** of the rotor **22** is controlled independently from the angle of attack **40** of the blades **32**.

In an alternative embodiment, the pivots **64**, and particularly the pins **118**, extend at an angle with respect to the radius **111** from the center of the hub **62**, thus providing a coupling between any coning or lifting of each blade **32**, and the respective blade angle of attack **40** of that blade **32**. Likewise, the pivots **64** extend perpendicularly with respect to a radius **111** of the hub **62**, while the blades **32** extend at a canted angle, just as the blades of the apparatus of FIG. **13**.

Referring to FIGS. **15A-15B**, one embodiment of the gyroglider **12** includes a frame **52** secured to a tether **14**. Meanwhile, servo-controlled pinions **68** operate along tracks **66** (a single track **66**, multiple tracks **66**, or the like) in order to pitch the frame **52** with respect to the tensioned tether **14**

securing the gyroglider **12** with respect to a ground station or the ground generally. In one embodiment, bias elements **124** such as springs, extensible bands, and the like operate to lift the blades **32** to an attitude as illustrated in FIG. **15**B.

With the pivots **64** as described with respect to FIGS. **11-14**, the blade angle of attack **40** is negative when the blade **32** is in the comparatively higher position of FIG. **15**B. Meanwhile, the cross-section **95** of the blade **32** of FIG. **15**B is flying with a negative angle of attack **40** with respect to the configuration of FIG. **15**A. Meanwhile, in the configuration of FIG. **15**A, in response to centrifugal force, the blades **32** descend and operate in a plane about the axis of rotation **34** of the hub **62**. In this case, the tether **14** is shown as passing through the hub **62**. Practically, the tether **14** terminates at the frame **52**, or at the hub **62**, with a single gyroglider **12** on a tether **14**.

Centrifugal force overcomes the bias of the bias elements **124**, connected between the hub **62** and the blade **32** by bollards **126** or other attachment mechanisms. Centrifugal force overcomes the biasing force of the bias elements **124**, thus causing the blades **32** to operate in substantially a planar configuration. In this configuration of FIG. **15**A, the blade angle of attack **40** is at its most positive value.

In contrast, in the low speed configuration, when the blade is just starting up from a stationary or non-rotating position, that is when the gyroglider **12** speed is sufficiently slow, or the speed of rotation is sufficiently slow, then each of the blades **32** is lifted up by a bias element **124**. This provides a situation wherein the wind **20** itself is not totally responsible to increase the coning angle or the coning of the rotor **22**, but the bias elements **124** will do so automatically whenever the speed is insufficient to generate the centrifugal force required to flatten out the blades **32**. Thus the biasing elements **124**, being a resilient element are controlled by a centrifugal force and passively control the blade pitch.

In accordance with another embodiment of the present invention, the biasing elements **124**, being servo actuators are adapted to actively control the blade pitch. The Angle of Attack (AoA) of the blades can be actively controlled such that either a windmill state for starting rotation (negative AoA) or a slightly positive AoA for autorotation is achieved.

Referring to FIGS. **16-17**, in one embodiment, a structure **130** supports a turntable **132**. The turntable **132** is supported on bearings reducing friction such that the rudder **54** of the gyroglider **12** generates sufficient rotational load to orient the gyroglider **12** into the wind **20**.

Regardless of whether or not a turntable **132** is relied upon, the standoff **134** elevates a pivot **136** above the level of the turntable **132**. On the pivot **136** the deck **140** is passively or actively controlled to change its attitude (angle) with respect to horizontal.

For example, in FIG. **16**, the gyroglider **12** sits at rest on the deck **140** supported by legs or feet **138** extending from the frame **52**. The legs **138** are a part of the frame **52** or may be extensible, permanent, retractable, and the like. Upon launching or landing, the deck **140** is tilted to provide the desired rotor angle of attack **30** to initiate or terminate flight. By the elevation of the structure **130**, the aircraft rotor **22** is placed above the surface of the earth. Thus, the gyroglider **12** is launched by tilting the deck **140** to provide a greater rotor angle of attack **30** and thus launch the aircraft. A similar process occurs during landing.

For example, the tether **14** draws the gyroglider **12** downward, while the control systems discussed hereinabove fly the gyroglider **12** down by changing the rotor angle of attack **30**, the blade angle of attack **40**, or both. As the aircraft is flown down, a reduced force or tension in the tether **14** is experienced. The capstan **16** requires less energy output to retrieve the gyroglider **12** than the energy generated by the aircraft when it is lifting the gyroglider **12** against the tether **14**, and producing maximum tension in the tether **14**.

As the gyroglider **12** approaches the deck **140**, the legs **138** touch the deck **140**, and orient the deck to the gyroglider **12**, or orient the gyroglider **12** to the orientation of the deck **140**. Ultimately, the deck **140** is leveled for storage, maintenance, and the like.

FIG. **24** illustrates a landing/launching fixture **184** that allows the gyroglider apparatus in accordance with the present invention to take off or land on a single point either on the ground, on a tower, on top of a buoy at sea or on a ship. This landing/launching fixture **184** obviates the need for a runway to launch and land. Landing in zero wind on the fixture is possible by reeling in the tether **14** at a speed sufficient to sustain the lift of the rotating blades which is approximately 10 knots. Takeoffs can be done in winds as small as 10 knots as the lift of the gyroglider in accordance with the present invention is huge and at take off the weight of the tether is at a bare minimum.

The landing/launching fixture **184** is provided with a captive slot **186** that constrains the tether **14** and the two line bridle lines **170** as they pass through to the snatch block (pulley on a very short line) **188** located at the very center of a hollow turntable **200** with bearing rollers. In accordance with the present invention, the term 'bridle' is used to indicate lines or cables that serve the purpose of rigging for the tether. The two bridle lines **170** converge at a bridle knot to form the tether **14**. The captive slot **186** is provided with two support arms **202**. The snatch block **188** allows the gyroglider to fly in any quadrant of the sky without twists in the tether **14** or complicated rotating machinery. The location of the snatch block **188** is centered and just below the hollow turntable **200** and allows the tether **14** to be lead to a stationary capstan **16**, converter **18** and tether storage means that do not need to move and can be permanently located below or in any direction or distance from the landing fixture **184**.

In accordance with an embodiment of the present invention, multiple gyrogliders, each with a landing/launching fixture, share a common generating facility with the tethers running for some distance across the ground using a system of rollers or pulleys (in pipes for safety) to bring the tether tension to a common generating and line storage station.

Thus the landing/launching fixture as illustrated in FIG. **24** is adapted to cradle and hold the gyroglider without a need for heavy landing gear. The fixture pivots up and down to change the angle of attack of the rotor without the gyroglider leaving the safety of the cradle. This permits the gyroglider to power up and creates a large amount of lift before releasing and lifting off or conversely power down and stop the rotor when landing. The ability of the gyroglider to fly with roll control while captive in the captive slot **186** allows it to negotiate gusts and changes in wind direction from any and all quadrants, even 180 degree shifts. By virtue of the turntable **200**, it is possible to track the gyroglider in the sky or while captive on the fixture **184** and ensure that the fixture **184** is always aligned with the changes in wind speed and wind direction, ready to accept the landing gyroglider at any moment. The tether is always threaded through the captive slot **186** and the tension ensures that the captive slot **186** and the fixture **184** are aligned with the wind.

FIG. **25** illustrates roll control for a gyroglider apparatus with two line bridles in accordance with an embodiment of

the present invention. The attachment point where the two bridle lines **170** converge is shifted to the left or right dynamically in flight by means of at least one roll control means **178** which is either a toothed track, hydraulic ram, line or a smart metal mounted to an underside of the frame **52** with a servo roller **180**. This causes the lift from the rotor **22** to be offset from the line and initiates a roll or turn to the left or right. If the attachment point is shifted to the left then the roll is to the left and vice versa. Thus by moving the attachment point either left or right of the Center of Pressure (CoP), the rotor **22** naturally tips and begins to tilt either left or right with very little control input force. The control box **172** pulls in and out lines **175** to activate pitch control.

Referring to FIG. **18**, in one embodiment, rotors **22** are separated from their frames **52** at a ground station. The frames **52** at the ground station are represented by the numeral **148**. For example, the capstan **16** actually retrieves the line, which is then stored in a tether storage means **142**, which is a storage reel or a rope tank as illustrated in FIGS. **22**A and **22**B. A staging mechanism **144** provides for selective removal of each aircraft frame **52** from its associated rotor.

The rotors **22** are then stacked to pass the tether **14** through the center aperture **122** of the hub **62** thereof. Thus, the rotors **22** are stacked one against another or one very close to another and separated by padding and the like, rather than being separated by hundreds or thousands of feet of the tether **14** used in operation.

The gyroglider **12** is redeployed by flying the gyroglider **12** upward, fixing frames with respect to the tether, and flying each frame **52** with its own rotor **22** upward to the next distance of separation for another gyroglider **12** to be attached. Thus, multiple gyrogliders produce a net total lift to provide a net increase in tension in the tether **14**.

Referring to FIG. **19**, the frame **52** provides a capture mechanism such as a connector or adapter **150** adapting each frame **52** to connect to the hub **62** of a rotor **22**. The adapter or connector **150** is connected along the path **152** to secure the frame **52** to the hub **62**. Meanwhile, the frame **52** is selectively fixed with respect to the length of the tether **14**, in order to operate the rotor at a location that will appropriately tension the tether **14**. The particular embodiment illustrates two pinions **68** servo-controlled to operate along each of the tracks **66**.

Practically, the gyroglider **12** operates as a platform for various instrumentation. For example, meteorological data is collected at comparatively high altitudes of tens of thousands of feet above the surface of the earth. Thus, comparatively reliable and long term data is obtained by adding instrumentation to the gyroglider **12**.

Referring to FIG. **20**, in one embodiment of an apparatus and method in accordance with the invention, a system **154** provides a method for controlling tension. Winds aloft are substantially more steady than winds near the nap of the earth. Accordingly, a controller **156** determines whether tension is within preset amounts permitted for a power stroke. Likewise, the controller **156** controls the tension by checking whether or not the tension is proper for a rewind stroke. The controller **156** receives an input **157** from an onboard tension meter **158**. The tension meter **158** measures the tension being added or the tension existing in the tether **14**. Meanwhile, an input **159** from a wind speed sensor **160** is provided to the controller **156** to indicate the wind speed to which a particular gyroglider **12** is exposed.

The wind speed sensor **160** provides an input **159** to the controller **156** indicating wind speeds. Accordingly, the controller **156** determines by an appropriate algorithm, whether or not the tension reported in the inputs **157** from the tension meter **158** is consistent with the configuration of the gyroglider **12**, the rotor **22**, the blades **32**, in particular.

The controller **156** reports the state **162** of the tether **14**. For example, if the state **162***a* suggests tension is within the proper range, then the controller **156** simply (as represented by the numberal **163***a*) repeats the monitoring cycle **164**. If instead, the tension state reflects too low tension **162***b*, then the controller **156** acts to decrease the reeling speed at which the power is being generated. Thus, the controller **156** flies the gyroglider **12** in such way as to decrease **163***b* the ground station payout speed of the tether, in order to reduce the power in the power stoke. Likewise, if the tether **14** and gyroglider **12** are flying in on a rewind stroke, then the state **162***b* causes the controller **156** to increase the reel in speed of the capstan **16** thereby retrieving the tether **14**.

If tension is outside the permissible operating range and at too low a value, the state **162***c* exists. The controller **156** increases **163***c* the rotor disk angle of attack **30** or alternatively, increase **163***c* the collective blade pitch **40**. Thus, the blade angle of attack **40** or blade collective pitch **40** is increased in order to increase lift forces **46**, and increase thereby the tension in the tether **14**.

If the state **162***d* results in tension too high for the structures on the ground, in the aircraft, or the tether **14** itself, the controller **156** reduces **163***d* the rotor angle of attack AOA **30**, or reduces **163***d* the collective blade pitch **40** or blade angle of attack **40**.

Finally, if the state **162***e* exists and the tension in the tether **14** is severely exceeding the permissible range of tension permitted in the tether **14**, the controller **156**, flies the gyroglider **12** to increase **163***e* the payout speed of the capstan **16**, or decrease **163***e* the rewind speed of the capstan **16** during the rewind stroke. Thus, the speed of reeling, the collective pitch **40** or both are controlled to reduce or otherwise control the tension. Ultimately, any of the states **162** are detected, and the remedial actions **163** are eventually fed back into the repeat of the cycle **164** sending in a new sensor output **166** or controller input setting **166** to the controller **156**.

The commands or remedies **163** are set to operate in ranges. As an alternative embodiment, all of the commands or remedies **163** are implemented in continuous algorithms that operate various control parameters of the gyroglider **12** in order to operate within the specified range of tension in the tether **14**.

Referring to FIGS. **21**A-**21**D, an alternative embodiment of the gyroglider **12** includes a bridle **170**, replacing certain portions of the rigid frame **52**. For example, the frame portion simply includes the frame **52** illustrated in FIG. **21**. Meanwhile, the bridle **170** replaces the tracks **66**, **76** in the frames **52** described hereinabove.

A controller **172** draws a pitch arm **174** down, or releases it to travel up. The arm **174** is a pitch arm and the elevation of the pitch arm **174** provides an increase in pitch, of the gyroglider, while a decrease in the elevation of the pitch arm **174** decreases the pitch of the gyroglider **12**. Thus, the rotor angle of attack **30** is modified by permitting the pitch arm **174** to elevate or to decline.

Lines **175** connected to the pitch arm, and to the aft portion of the frame **52** are run through the controller **172** to extend or contract the lines **175**. Thus, the lines **175** can be considered as a single line passing through the controller **172**, and distributed between the pitch arm **174** on the forward end of the gyroglider **12**, and the aft portion of the frame, near the boom **58** in the aft portion of gyroglider **12**.

Likewise, the right to left attitude of the roll arms **176** is controlled by drawing the roll lines **177** through the controller **172** in order to extend or shorten the distance from the controller **172** to the roll arm **176** on either side of the frame **52**. Thus, in general, the bridle **170** provides roll and pitch control of the frame **52**, and thus the roll and pitch angles of the rotor **22** associated therewith.

As the wind speed increases, the CoP (Center of Pressure) increases with the square of the wind while the CoG (Center of Gravity) remains constant. Soon the pendulum effect of the CoG (Center of Gravity) is overwhelmed by the much stronger effects of the CoP (Center of Pressure) and the gyroglider becomes unstable. The gyroglider apparatus in accordance with the present invention takes care of this through two embodiments as illustrated in FIG. **23**. In one embodiment, a toothed track **178** is mounted to an underside of the frame **52** with a servo roller **180**. A weighted box containing battery and other heavy flight equipment is mounted on a sliding track on the tail boom of the gyroglider apparatus. As the wind speed increases (or decreases) the weighted box slides along the track **178**, thereby changing the center of gravity and keeping the pendulum effect in balance with the CoP. In case the tether breaks, the CoG is shifted on the track **178** to be in front of the CoP, thus making it possible to fly the gyroglider apparatus independently to the ground in an emergency situation. Alternatively, a horizontal stabilizer **182** is provided at the rear to provide a counter downward force that increases with the speed of the wind at the same rate as the increase in the CoP as the wind increases. The natural pendulum effect is lost but is artificially controlled with an auto pilot manipulating the Rotor Angle of Attack (AoA) and/or Blade Angle of Attack (AoA) and/or horizontal and vertical tail surfaces.

FIG. **26** illustrates the gyroglider apparatus in accordance with the present invention being provided with a flywheel **206** and clutches **204** to even out the power generated by eliminating peaking and spikes. The clutches **204** and the flywheel **206** regulate the RPM and torque at the input to the converter **18**. The clutches **204** are mechanical or infinitely adjustable electromagnetic clutches. Motor used in the rewind stroke is represented by the numeral **208**. The tether **14** is connected to a landing fixture which is close by if a single gyroglider is connected or it is a few kilometers away if multiple gyrogliders are connected for powering one converter **18**. The flywheel **206** stores momentum from the power strokes of the gyroglider apparatus for extraction to the converter **18** during retrieval of the tether **14**. The converter **18**, typically a generator, receives a steady RPM and torque from the flywheel **206** that is regulated by the clutches **204**. In accordance with one aspect of the embodiment, the RMP is stepped up or down with gear arrangements. In accordance with another aspect of this embodiment, more than one capstan **16** and retrieval motor **208** are attached to a single flywheel **206** and converter **18**.

The Bernoulli Effect operates in liquids. However, it is not typically relied on to create lift. The reason is that liquid if passing by in a free stream, in order to constrict to a reduced area, must be drawn away from other liquid. Meanwhile, the Bernoulli Effect in liquids is often seen with constriction of flow paths where the adjacent material is a solid wall in a conduit conducting liquid, rather than a particular flow of liquid in a free stream, where all movement of liquid must be associated with displacement of adjacent liquid.

In alternative embodiments, an apparatus and method in accordance with the invention works in water. The Bernoulli lifting effect is typically relied on for flight in gases. Nevertheless, other fluids, such as liquids, may also be used otherwise to advantage. For example, certain flows due to tides, rivers, and the Gulf stream within the ocean propagate motion of large volumes and masses of fluid. In such an embodiment, the apparatus **10** may, but need not, operate as a windmill. Such a device is anchored to rotate about a horizontal axis parallel to the fluid flow, thus operating as a "water mill."

In certain waterborne embodiments, as well as airborne embodiments, a barge anchors at a point in a body or stream of water. The generator system with its take-up unit is installed on such a barge or on land at the surface of the body of water.

In one alternative embodiment, a rotor or sail is tethered from a pulley secured to the floor of a body of water. Drag factors are designed to differ between blades moving with and against the fluid flow. Thus, the flow of a current tends to rotate the blades causing the blades to auger upward through the water drawing the line of the tether upward or can auger down from a barge or a ship in an alternate embodiment.

Similarly, generated energy is conducted in any suitable manner. In one embodiment, electrical energy generation is a suitable transformation of the energy of a rotor into a suitably distributable and storable medium. Alternatively, hydraulic power, compression of a gas such as air or another working fluid, pumping water, and the like is a result of conversion of the energy generated by the rotor in drawing the tether.

In certain embodiments, energy is generated in a mechanical form rather than electrical form and used directly. For example, compressed gases, a flow of water, and the like are used to propel various transportation modes.

Similarly, in certain embodiments the tether **14** is connected directly to tow or to generate power on water craft, such as boats or ocean going ships. Rather than a sail providing power, a rotor provides electrical power or mechanical power to drive the screws of a ship. Even with lower power generation capacities, an apparatus **10** in accordance with the invention provides power to operate electrical and control equipment on board a ship, even while the ship continues to move across the ocean.

In certain embodiments, an apparatus **10** in accordance with the invention serves as a tower aloft carrying communication devices, telephone cell repeaters, radar systems, weather sensors, atmospheric sensors, fire detection devices, ground sensors, and the like. The altitude, stability, and available power from an apparatus **10** in accordance with the invention provide an excellent platform with supporting power to such devices.

In certain embodiments, the blade angle of attack **40** is controlled by a "smart metal" having a memory. Accordingly, upon temperature change, the metal deflects, causing a change in pitch of the blade to which the smart metal serves as a mounting. Meanwhile, other actuators, including those enclosed in the Groen patent reference incorporated herein by reference above, and other apparatus known in the art, may be used to control on demand the blade angle of attack **40** of the rotor.

The gyroglider apparatus in accordance with the present invention effectively utilizes shunting during cross wind maneuvering for power generation. Maintaining a constant rotor pitch and varying the bank angle defined by the angle between the gyroglider's normal axis and the Earth's vertical plane containing the gyroglider's longitudinal axis, cross wind maneuvering of said gyroglider is achieved such that a cross range velocity is induced. Depending upon the lift/drag ratio of the rotor, a relative wind on the rotor in far

excess of ambient wind is further introduced, resulting in shunting of the gyroglider. FIGS. **27**A-**27**E illustrate graphical representations of flight parameters during cross wind maneuvering. It is evident from the graphical representation that under identical ambient wind conditions, using a cross wind maneuver more than double the relative wind (4×dynamic pressure) is achieved as compared to that under straight ahead maneuver. As illustrated in FIG. **27**B, the bank angle is modulated early in the power stroke so as to limit line tension during the period of high relative ambient wind prior to winch deploy rate becoming fully developed (which serves to reduce relative wind); this is done to keep the line tension within a safety factor of 2.0 based on the design criteria. The nominal profiles of the flight parameters during cross wind maneuvering are illustrated in FIGS. **27**B and **27**C. The trajectories of the gyroglider in accordance with the present invention during cross wind maneuvering are illustrated in FIGS. **27**D and **27**E. The difference in cross range at the closure of the cycle, results from the asymmetry in the bank angle profile, and would be "washed out" on successive trajectories by reversing the profile asymmetry. The shunting flight trajectory followed by the gyroglider in accordance with the present invention during cross wind maneuvering helps generate about 30% more power.

The numerical values given of various physical parameters, dimensions and quantities are only approximate values and it is envisaged that the values higher or lower than the numerical value assigned to the physical parameters, dimensions and quantities fall within the scope of the invention unless there is a statement in the specification to the contrary.

The present invention may be embodied in other specific forms without departing from its spirit or essential characteristics. The described embodiments are to be considered in all respects only as illustrative, and not restrictive. The scope of the invention is, therefore, indicated by the appended claims, rather than by the foregoing description. All changes which come within the meaning and range of equivalency of the claims are to be embraced within their scope.

The invention claimed is:

1. A gyroglider apparatus for power generation comprising:

at least one gyroglider comprising a rotor with a plurality of rotor blades rotatably secured to a frame, said rotor adapted to rotate about an axis of rotation and provide a lift to said gyroglider; said rotor having a rotor pitch defined by a path of said rotor with respect to the incoming wind and a blade pitch defined respectively for each of said rotor blades by the angle of said blade with respect to the incoming wind, wherein a means is provided to vary bank angle of said rotor, said bank angle defined by the angle between said gyroglider's normal axis and the Earth's vertical plane containing said gyroglider's longitudinal axis;

a tether having a first end and a second end, said first end being positioned proximate the earth and the second end extending aloft, said tether being adapted to secure said gyroglider at said second end thereof;

tension management means adapted to manage tension in said tether comprising:

an onboard tension meter adapted to measure tension existing in or added to said tether;

a wind speed sensor adapted to indicate the wind speed to which said gyroglider is exposed; and

a controller adapted to receive inputs from said onboard tension meter and said wind speed sensor and cyclically monitor the tension in said tether, said controller being further adapted to determine whether the input from said onboard tension meter is consistent with the configuration of said gyroglider, said rotor and said blades; and generate an output state of said tether;

a first control means adapted to receive said output state of said tether and selectively control said rotor pitch if said output state indicates a value too low or too high with reference to a predetermined range;

a second control means adapted to receive said output state of said tether and selectively control said blade pitch if said output state indicates a value too low or too high with reference to said predetermined range;

a capstan adapted to receive said output state of said tether and further adapted to cyclically reel in or payout said tether proximate said first end thereof, in a predetermined systematic order if said output state indicates a value way too low or way too high with reference to said predetermined range;

a converter adapted to convert rotational energy from said capstan to power in a form selected from the group consisting of transmissible forms, storage forms and both, a transmissible form and a storage form; and

a connector adapted to connect said capstan to said converter.

2. The gyroglider apparatus as claimed in claim **1**, wherein said gyroglider apparatus further comprises means to manage shunting of said gyroglider, said means being adapted to maneuver said gyroglider cross wind such that a cross range velocity is induced and further adapted to induce a relative wind on said rotor in excess of ambient wind resulting in tension in said tether.

* * * * *