US009270405B2

(12) United States Patent
Blair et al.

(10) Patent No.: US 9,270,405 B2
(45) Date of Patent: Feb. 23, 2016

(54) **DIRECTIONLESS OPTICAL ARCHITECTURE AND HIGHLY AVAILABLE NETWORK AND PHOTONIC RESILIENCE METHODS**

(71) Applicants: **Loudon T. Blair**, Severna Park, MD (US); **Michael Y. Frankel**, Baltimore, MD (US)

(72) Inventors: **Loudon T. Blair**, Severna Park, MD (US); **Michael Y. Frankel**, Baltimore, MD (US)

(73) Assignee: **Ciena Corporation**, Hanover, MD (US)

(*) Notice: Subject to any disclaimer, the term of this patent is extended or adjusted under 35 U.S.C. 154(b) by 16 days.

(21) Appl. No.: **14/457,201**

(22) Filed: **Aug. 12, 2014**

(65) **Prior Publication Data**

US 2014/0348504 A1 Nov. 27, 2014

Related U.S. Application Data

(63) Continuation of application No. 12/045,933, filed on Mar. 11, 2008, now Pat. No. 8,849,115.

(51) **Int. Cl.**
H04J 14/02 (2006.01)
H04Q 11/00 (2006.01)

(52) **U.S. Cl.**
CPC ***H04J 14/0212*** (2013.01); ***H04J 14/025*** (2013.01); ***H04J 14/0206*** (2013.01); ***H04J 14/0209*** (2013.01); ***H04J 14/029*** (2013.01); ***H04J 14/0213*** (2013.01); ***H04J 14/0217*** (2013.01); ***H04J 14/0227*** (2013.01); ***H04J 14/0246*** (2013.01); ***H04J 14/0284*** (2013.01); ***H04J 14/0291*** (2013.01); ***H04J 14/0294*** (2013.01); ***H04J 14/0295*** (2013.01); ***H04Q 11/0005*** (2013.01); ***H04Q 11/0062*** (2013.01);

(Continued)

(58) **Field of Classification Search**
USPC 398/48–50, 83
See application file for complete search history.

(56) **References Cited**

U.S. PATENT DOCUMENTS

5,838,848 A 11/1998 Laude
6,285,500 B1 9/2001 Ranalli et al.

(Continued)

OTHER PUBLICATIONS

S. Thiagarajan, L. Blair, and J. Berthold, Direction-Independent Add/Drop Access for Multi-Degree ROADMs, in Optical Fiber Communication Conference and Exposition and the National Fiber Optic Engineers Conference, OSA Technical Digest (CD); Optical Society of America, Feb. 24, 2008.*

(Continued)

Primary Examiner — Nathan Curs
(74) *Attorney, Agent, or Firm* — Clements Bernard PLLC; Christopher L. Bernard; Lawrence A. Baratta, Jr.

(57) **ABSTRACT**

A directionless optical architecture is described for reconfigurable optical add/drop multiplexers (ROADMs) and wavelength selective switches (WSSs). The directionless architecture utilizes a directionless wavelength switch coupled between client devices and ROADMs/WSSs to eliminate the need to hard-wire client devices to a wavelength division multiplexed (WDM) network. Accordingly, client device connections can be automatically routed without manual intervention to provide a highly resilient network design which can recover route diversity during failure scenarios. Additionally, the present invention minimizes deployments of costly optical transceivers while providing superior resiliency. Further, the present invention couples the directionless optical architecture and associated optical protection mechanisms with existing mesh restoration schemes to provide additional resiliency.

13 Claims, 45 Drawing Sheets

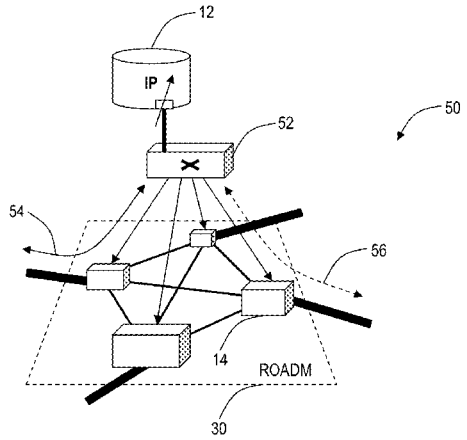

(52) **U.S. Cl.**
CPC *H04Q 2011/0047* (2013.01); *H04Q 2011/0081* (2013.01)

(56) **References Cited**

U.S. PATENT DOCUMENTS

6,335,992	B1	1/2002	Bala et al.	
6,600,852	B1	7/2003	Augustsson	
6,771,852	B2	8/2004	Hemenway et al.	
6,876,475	B1	4/2005	Trisnadi et al.	
6,937,993	B1	8/2005	Gabbita et al.	
7,043,110	B1	5/2006	Trisnadi et al.	
7,072,539	B2	7/2006	Wu et al.	
7,092,599	B2	8/2006	Frisken	
7,099,529	B2	8/2006	Wang et al.	
7,123,592	B2	10/2006	Geile et al.	
7,167,441	B2	1/2007	Donoghue et al.	
7,167,646	B2	1/2007	Chin et al.	
7,171,070	B1	1/2007	Birk et al.	
7,181,139	B2	2/2007	Handelman et al.	
7,200,331	B2	4/2007	Roorda et al.	
7,212,703	B2	5/2007	Wu	
7,212,704	B2	5/2007	Ducellier	
7,218,805	B2	5/2007	Oberg	
7,221,821	B2	5/2007	Eldada	
7,228,027	B1	6/2007	Birk et al.	
7,231,107	B1	6/2007	Zhong et al.	
7,254,327	B1	8/2007	Zhong et al.	
7,257,285	B2	8/2007	Doerr et al.	
7,257,288	B1	8/2007	Strasser et al.	
7,263,253	B2	8/2007	Davis et al.	
7,277,608	B2	10/2007	Isomura et al.	
7,283,709	B2	10/2007	Doerr et al.	
2001/0009465	A1	7/2001	Uehara	
2001/0040711	A1*	11/2001	Al-Salameh et al.	359/128
2002/0089712	A1	7/2002	Kang et al.	
2003/0169470	A1	9/2003	Alagar et al.	
2003/0215238	A1	11/2003	Milton et al.	
2004/0186701	A1	9/2004	Aubin et al.	
2004/0202467	A1*	10/2004	Luft et al.	398/4
2004/0228631	A1	11/2004	Mantin et al.	
2005/0273516	A1	12/2005	Patrick et al.	
2005/0273521	A1	12/2005	Patrick et al.	
2006/0031354	A1	2/2006	Patrick et al.	
2006/0031355	A1	2/2006	Patrick et al.	
2006/0031431	A1	2/2006	Patrick et al.	
2006/0031432	A1	2/2006	Patrick et al.	
2006/0031433	A1	2/2006	Patrick et al.	
2006/0031481	A1	2/2006	Patrick et al.	
2006/0031930	A1	2/2006	Patrick et al.	
2006/0034237	A1	2/2006	Patrick et al.	
2006/0045528	A1	3/2006	Gumaste et al.	
2006/0078332	A1	4/2006	Fang et al.	
2006/0098981	A1	5/2006	Miura et al.	
2006/0198575	A1	9/2006	Doerr et al.	
2006/0198583	A1	9/2006	Oikawa et al.	
2006/0198636	A1	9/2006	Charlet et al.	
2006/0210268	A1	9/2006	Gumaste et al.	
2006/0210273	A1	9/2006	Gumaste et al.	
2006/0228072	A1	10/2006	Davis et al.	
2006/0275035	A1	12/2006	Way	
2007/0009204	A1	1/2007	Ducellier et al.	
2007/0036480	A1	2/2007	Wu	
2007/0081761	A1	4/2007	Doerr et al.	
2007/0116462	A1	5/2007	Peloso et al.	
2007/0140618	A1	6/2007	Doerr et al.	
2007/0160321	A1	7/2007	Wu et al.	
2007/0183777	A1	8/2007	Peloso et al.	
2007/0189775	A1	8/2007	Charlet et al.	
2007/0196106	A1	8/2007	Eiselt	
2007/0204046	A1	8/2007	Batta et al.	
2007/0237451	A1	10/2007	Colbourne	
2007/0242953	A1	10/2007	Keyworth et al.	
2007/0255640	A1	11/2007	Gumaste	
2007/0269210	A1	11/2007	Doerr et al.	
2007/0269211	A1	11/2007	Doerr et al.	
2007/0274724	A1	11/2007	Gumaste	
2008/0118245	A1	5/2008	Chang et al.	
2008/0181605	A1*	7/2008	Palacharla et al.	398/50

OTHER PUBLICATIONS

Lei Zong, Xiaodong Huang, Ting Wang, Philip Ji, Omatsu Matsuda, Milorad Cvijetic; "A Novel Tunable DeMEX/MUX Solution for WSS-Based ROADM and WXC Nodes"; 1. NEC Laboratories America, Inc., Princeton, NJ; 2. Department of Computer Science, the University of Texas in Dallas, Richardson, TX; 3. NEC Corporation, Chiba 270-1198, Japan; 4. NEC America, Inc., Herndon, VA; (c)2005 Optical Society of America; OCIS codes: (060.0060) Fiber optics and optical communications; (060,4250) Networks.

Sashisekaran Thiagarajan, Loudon Blair, Joseph Berthold; "Direction-Independent Add/Drop Access for Multi-Degree ROADMs"; Office of the CTO, Ciena Corporation, Linthicum, MD; (c)Optical Society of America; OCIS Codes: (060.4250) Networks; (060.4510) Optical Communications; (060.1155) All-Optical Networks, 2008.

* cited by examiner

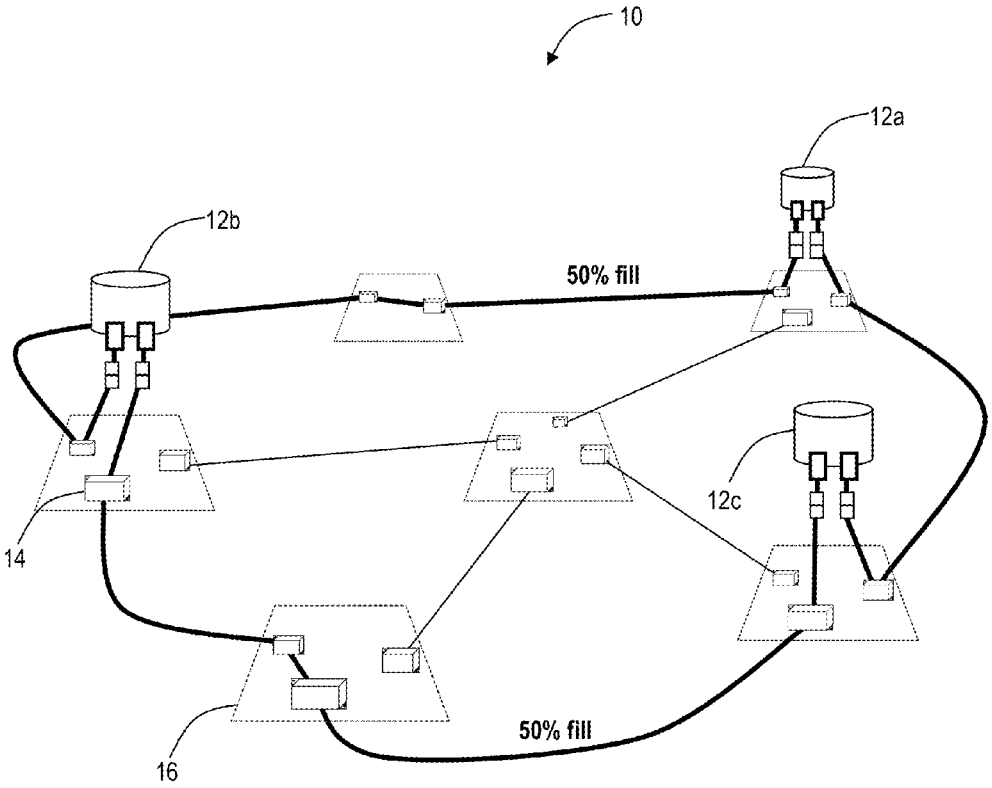

FIG. 1 Prior Art

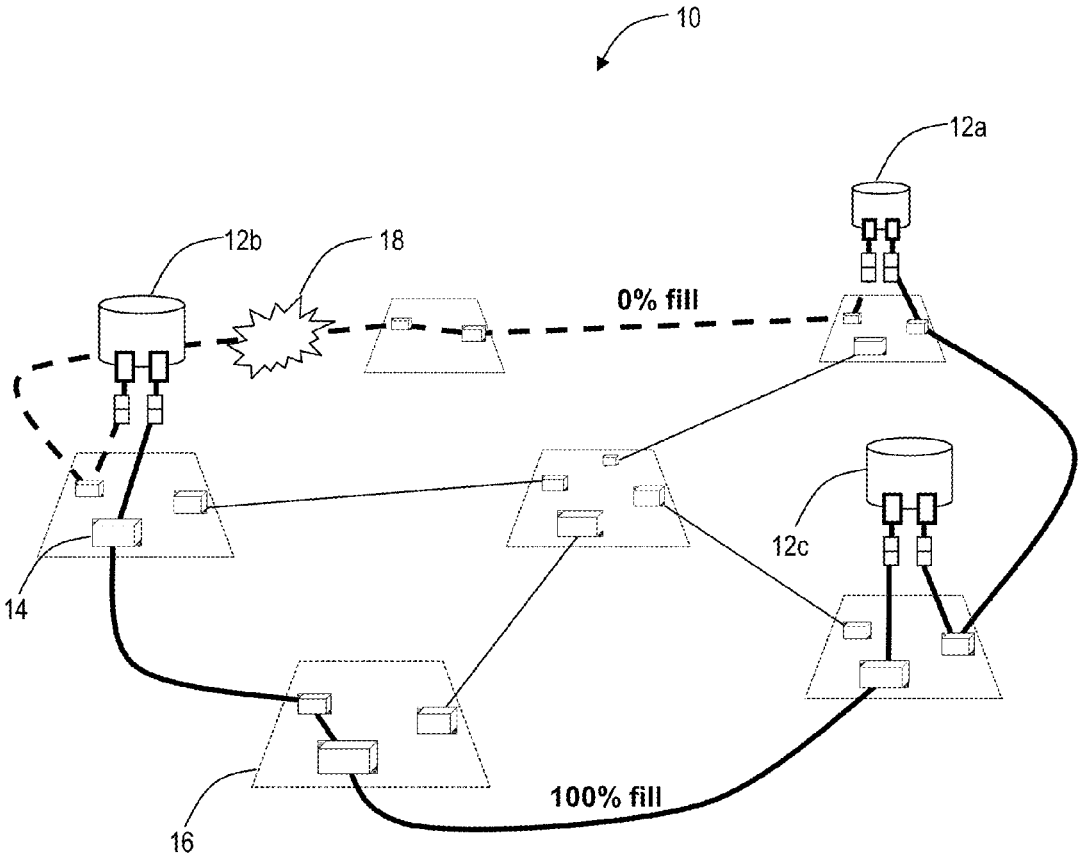

FIG. 2 Prior Art

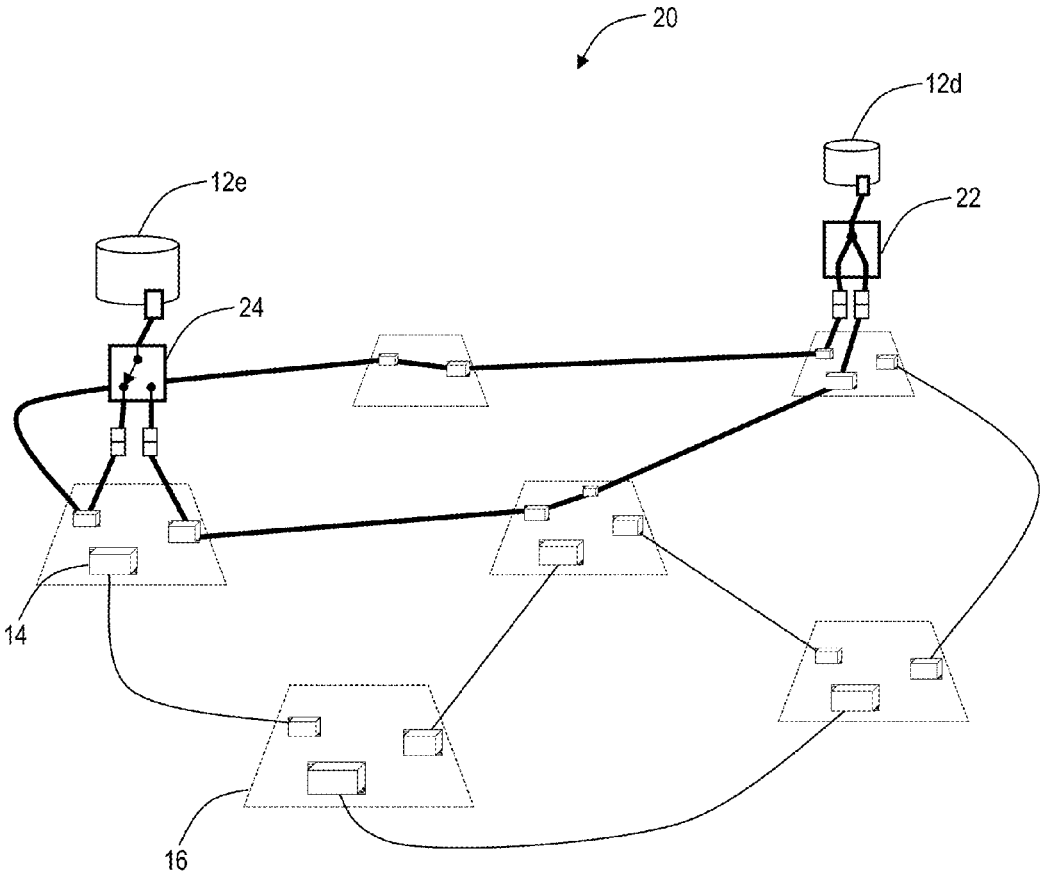

FIG. 3 Prior Art

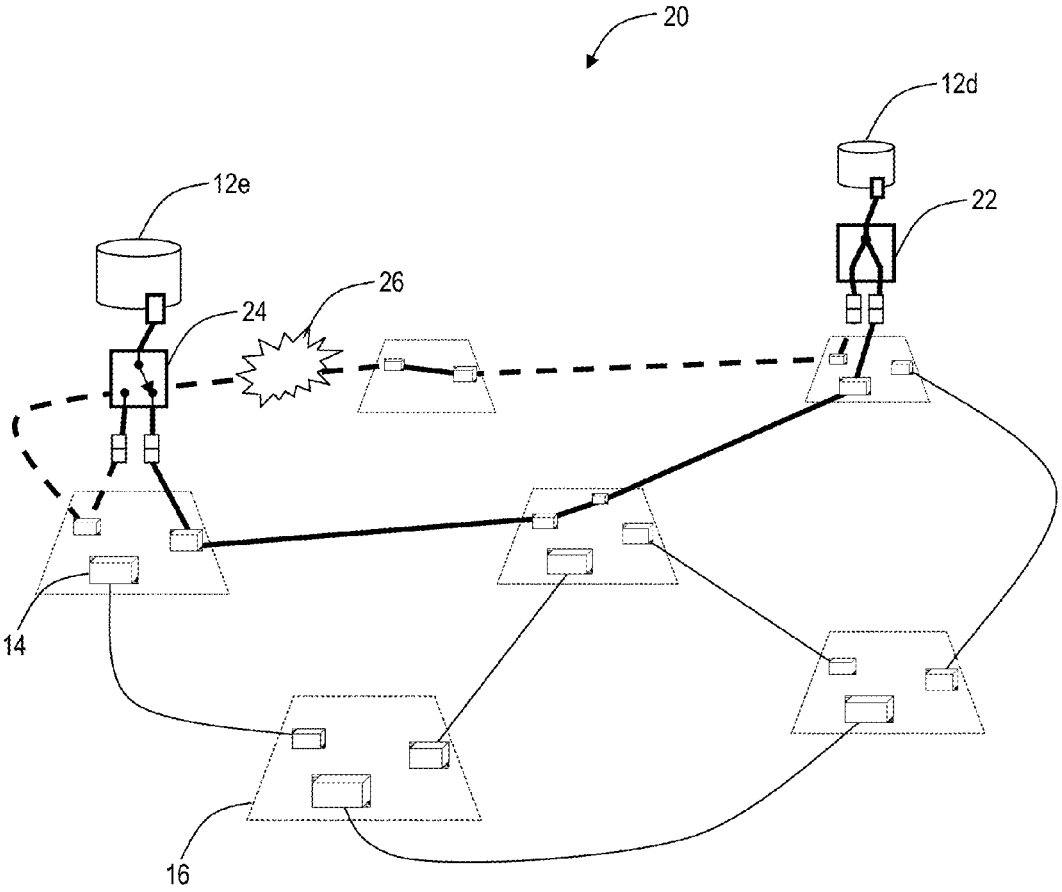

FIG. 4 Prior Art

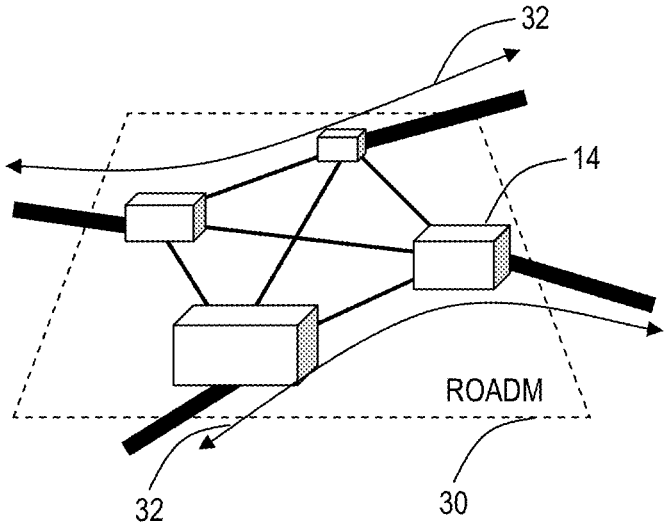

FIG. 5 Prior Art

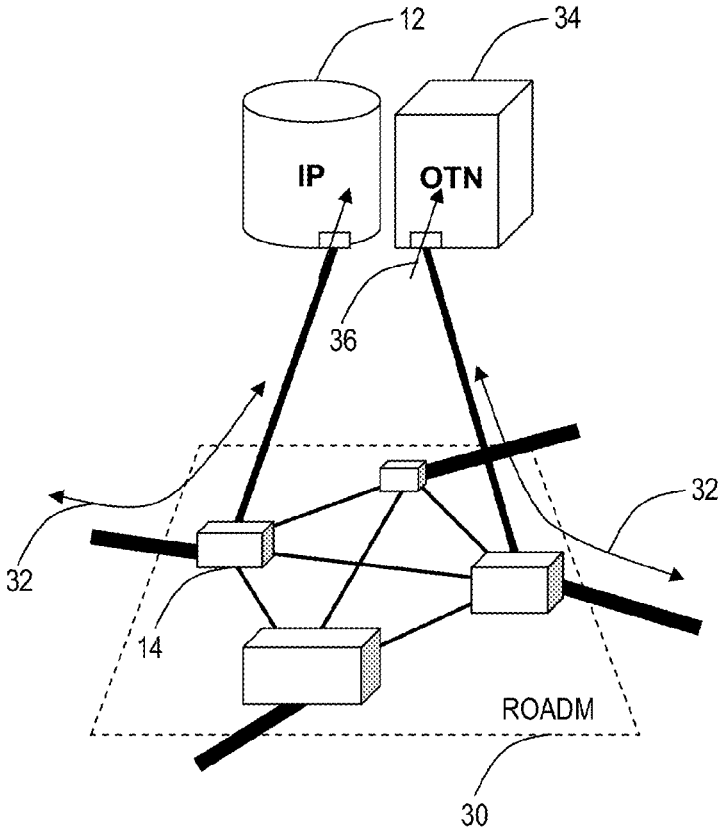

FIG. 6 Prior Art

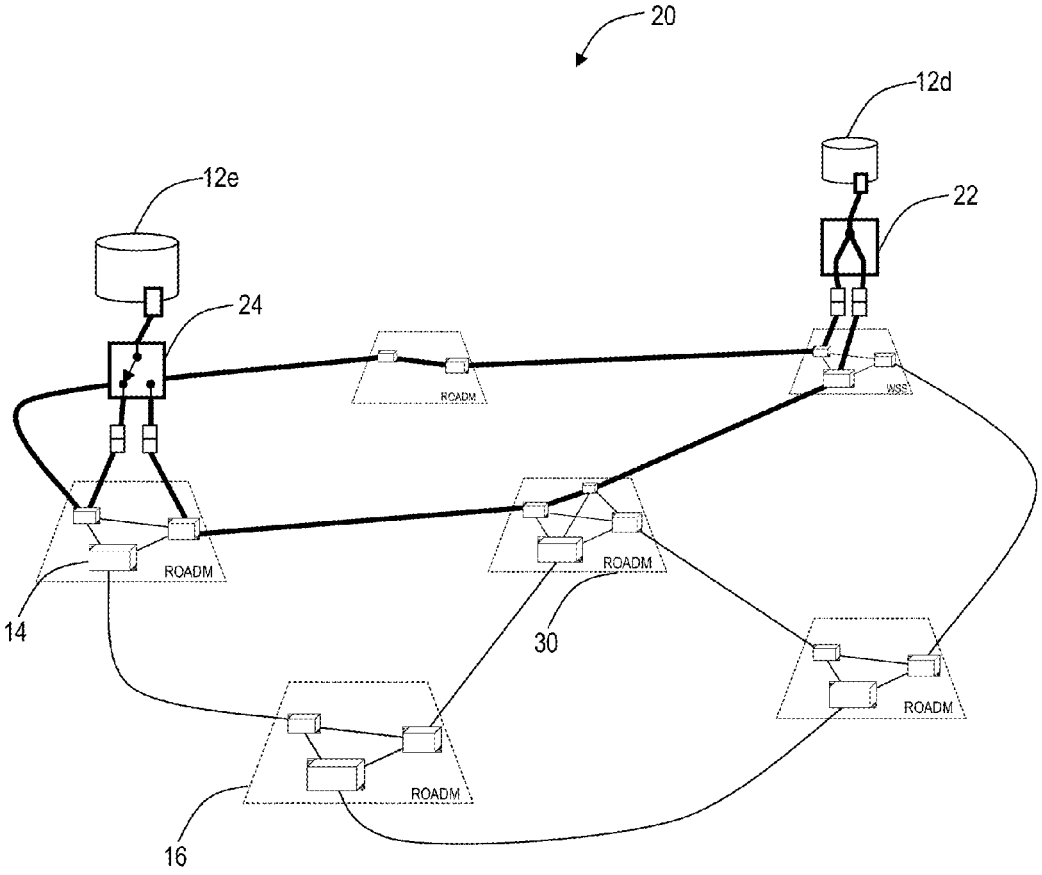

FIG. 7 Prior Art

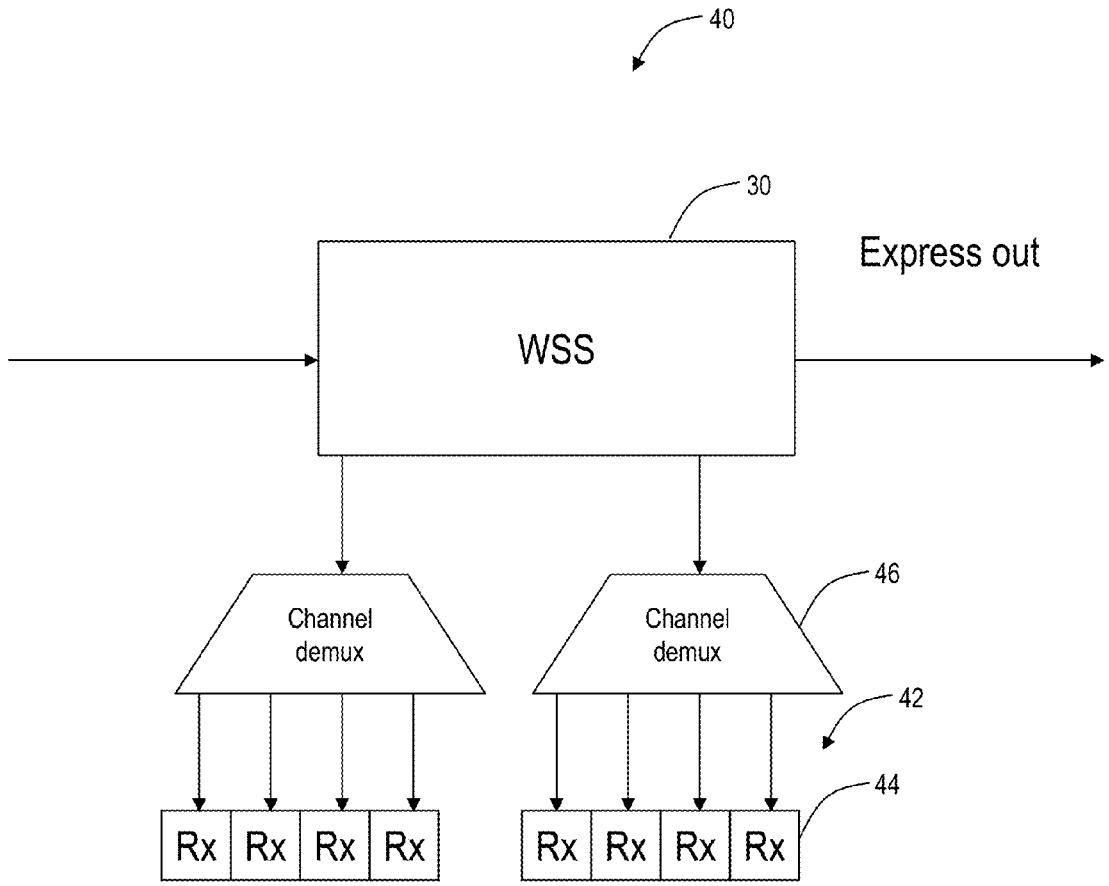

FIG. 8 Prior Art

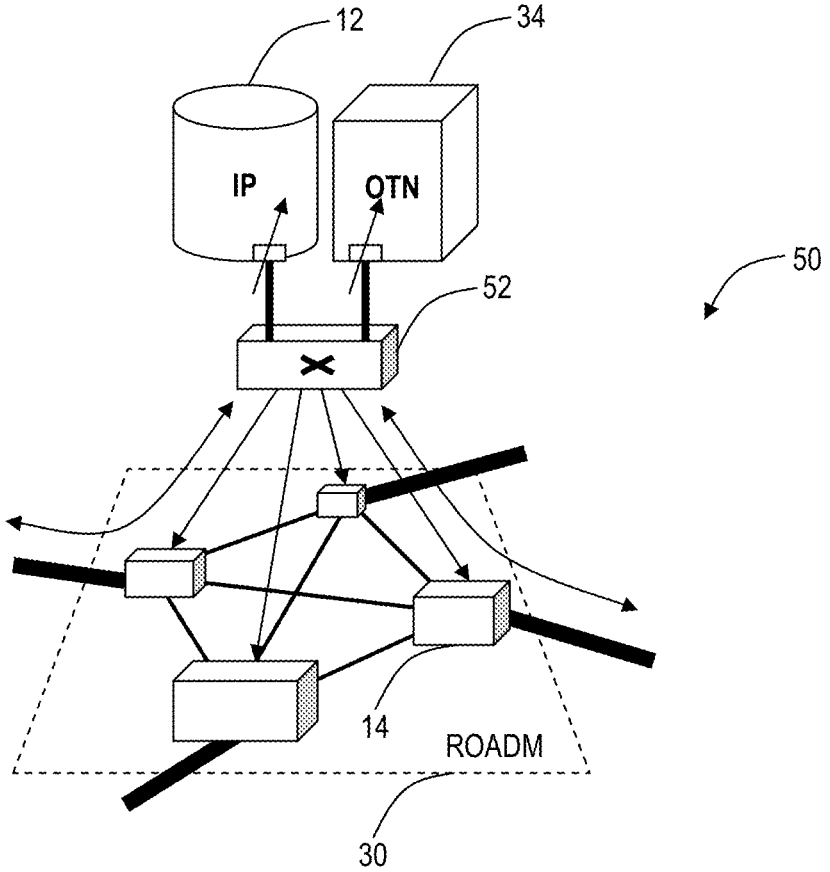

FIG. 9

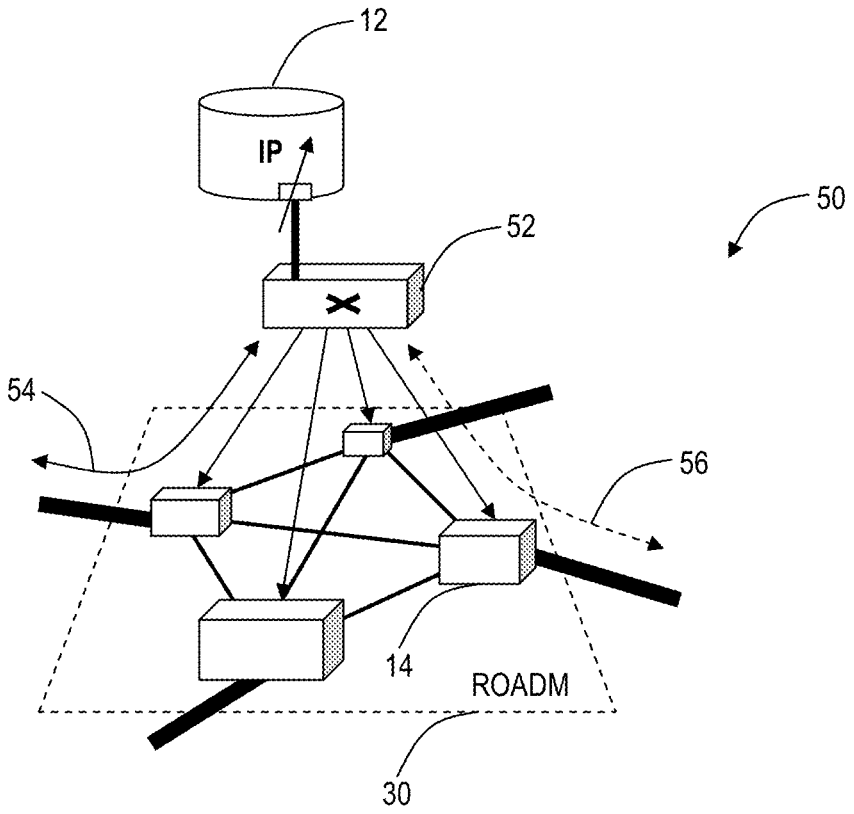

FIG. 10

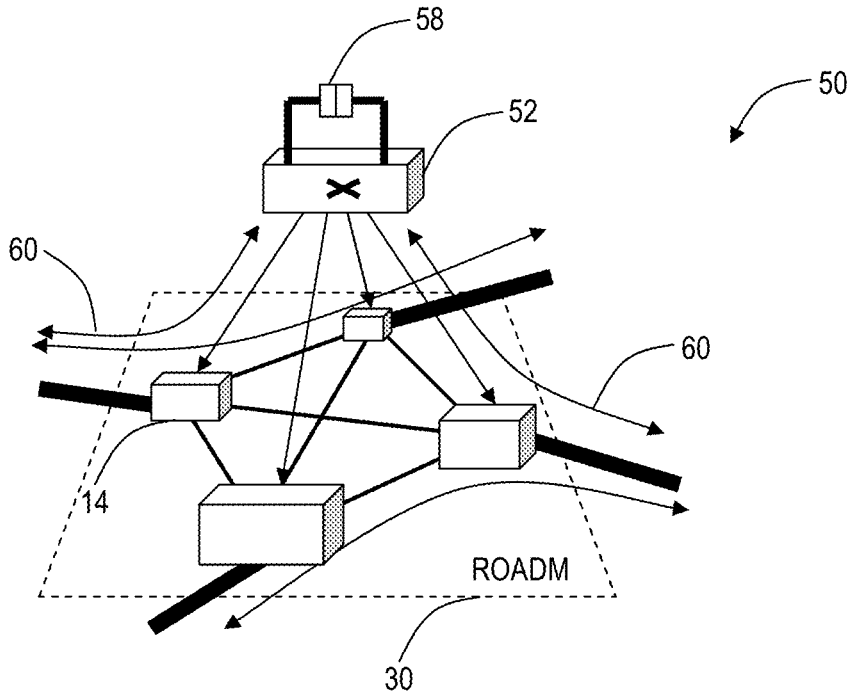

FIG. 11

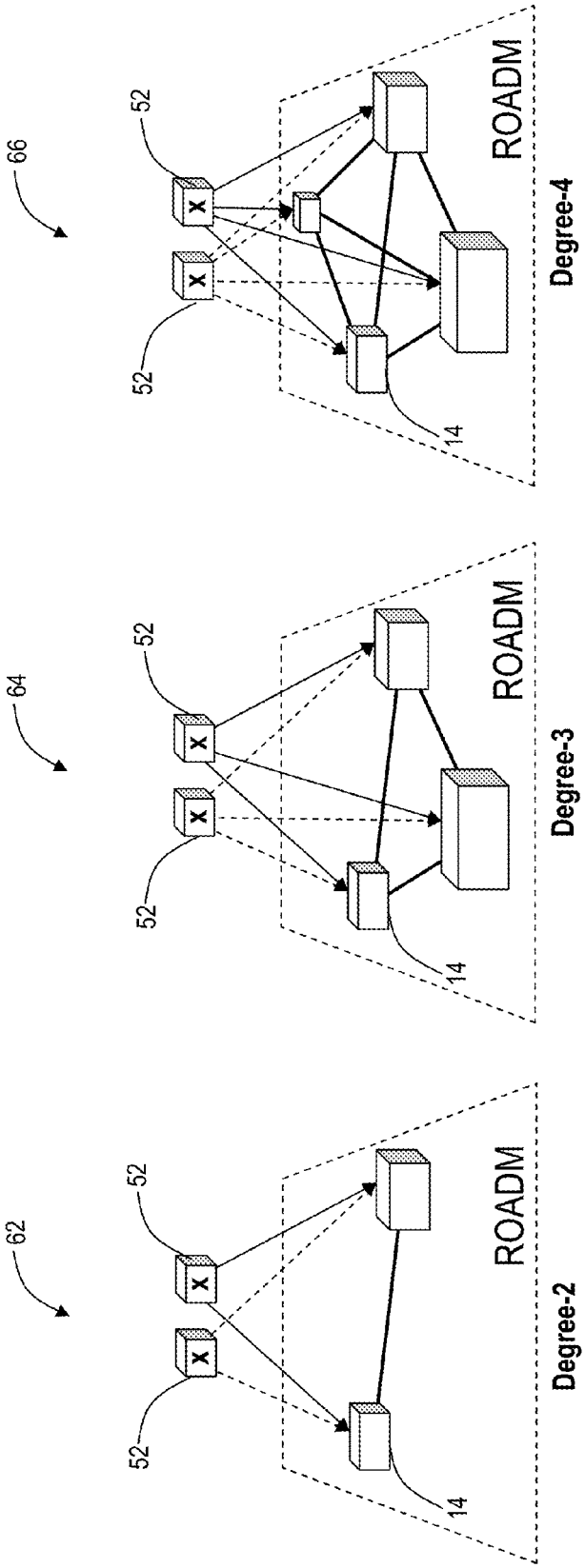
66
52
52
14
ROADM
Degree-4
64
52
52
14
ROADM
Degree-3
62
52
52
14
ROADM
Degree-2

FIG. 12

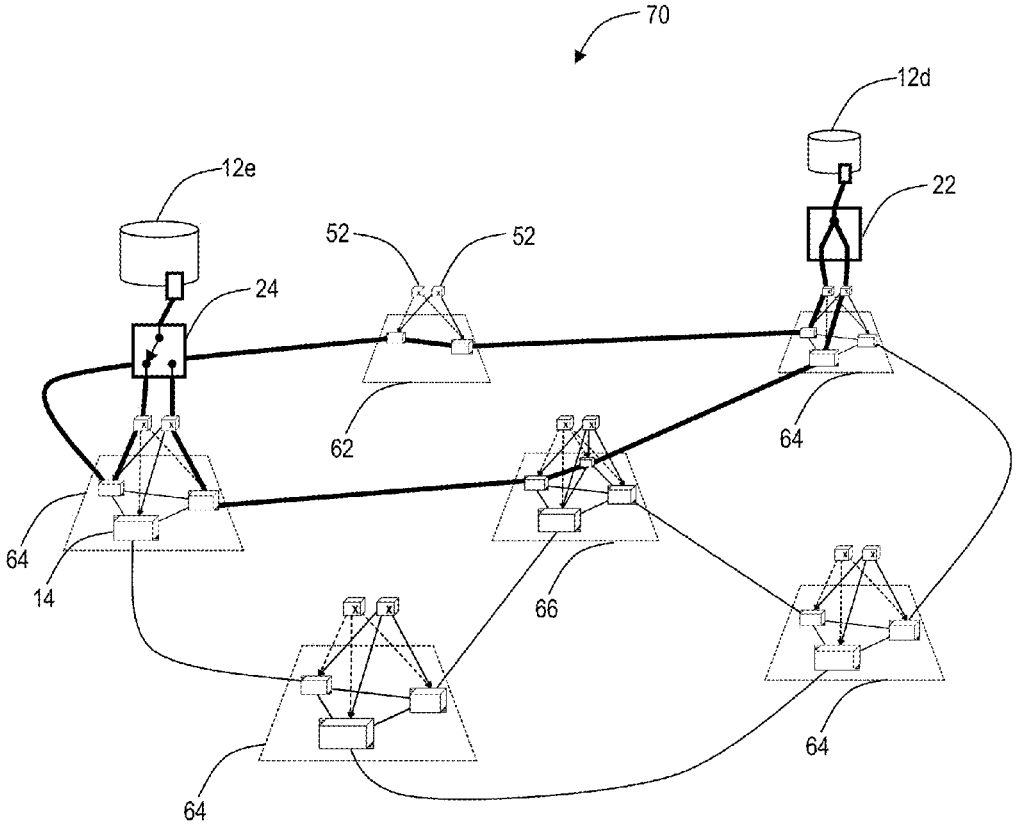

FIG. 13

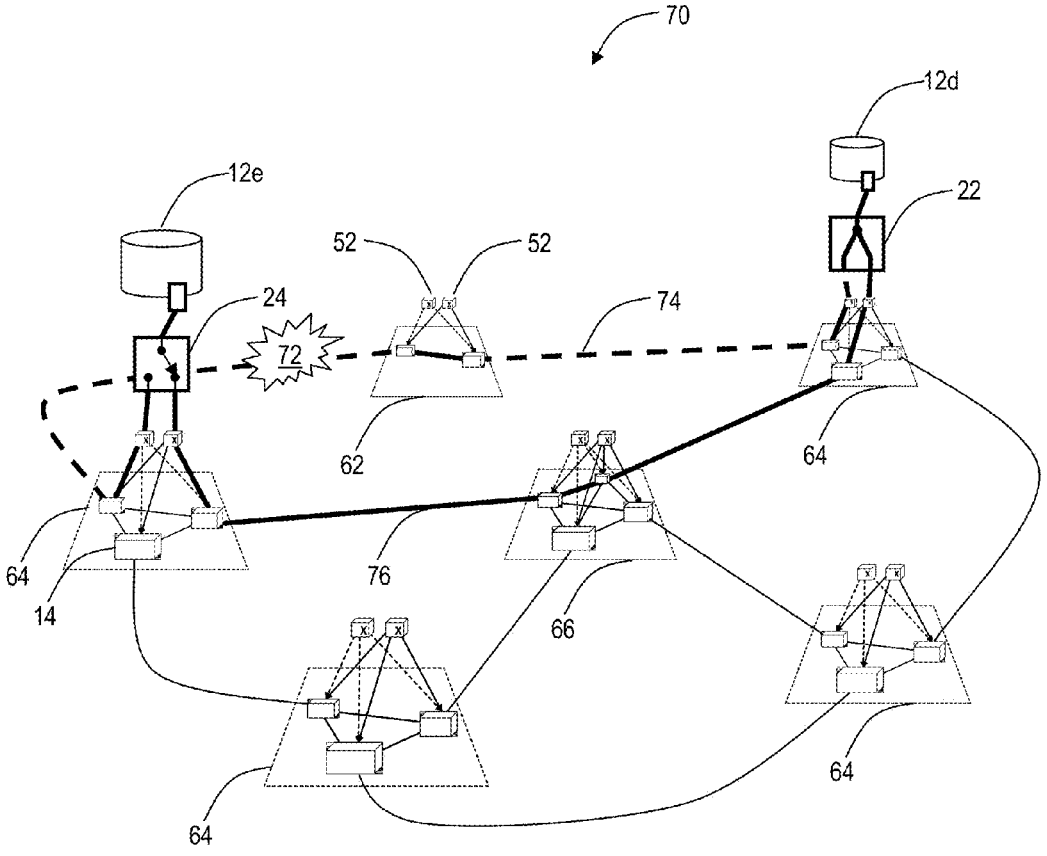

FIG. 14

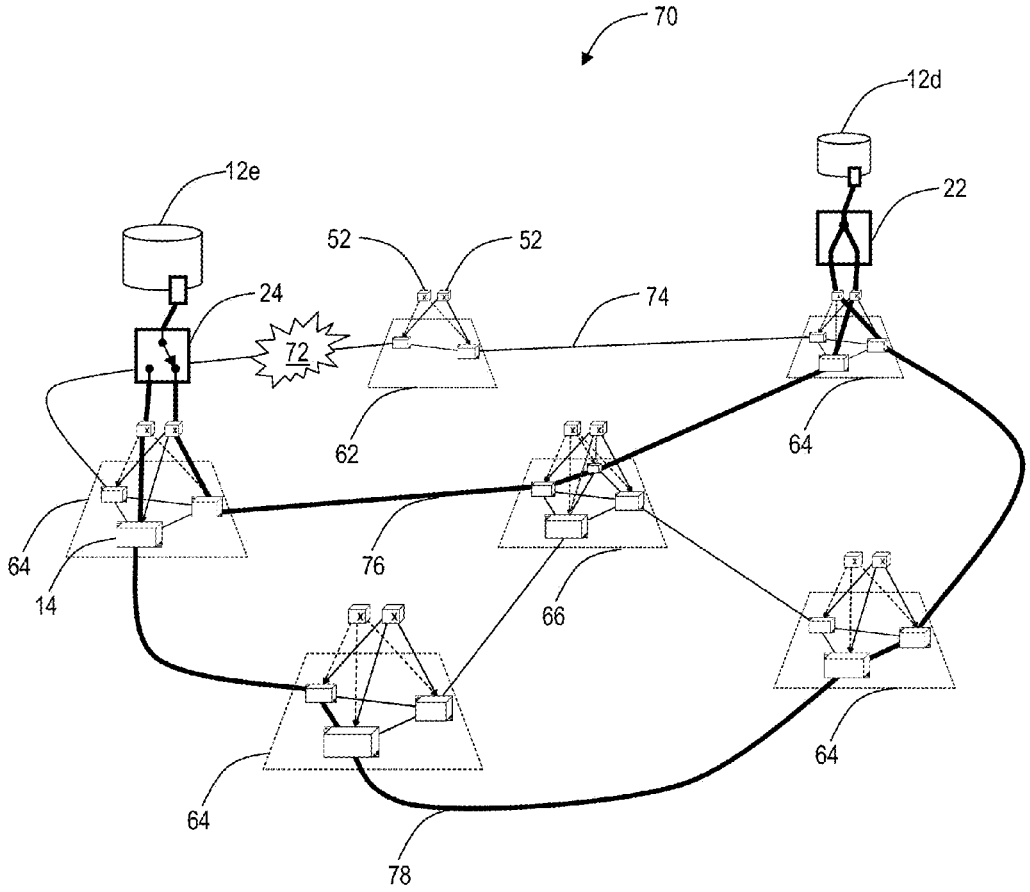

FIG. 15

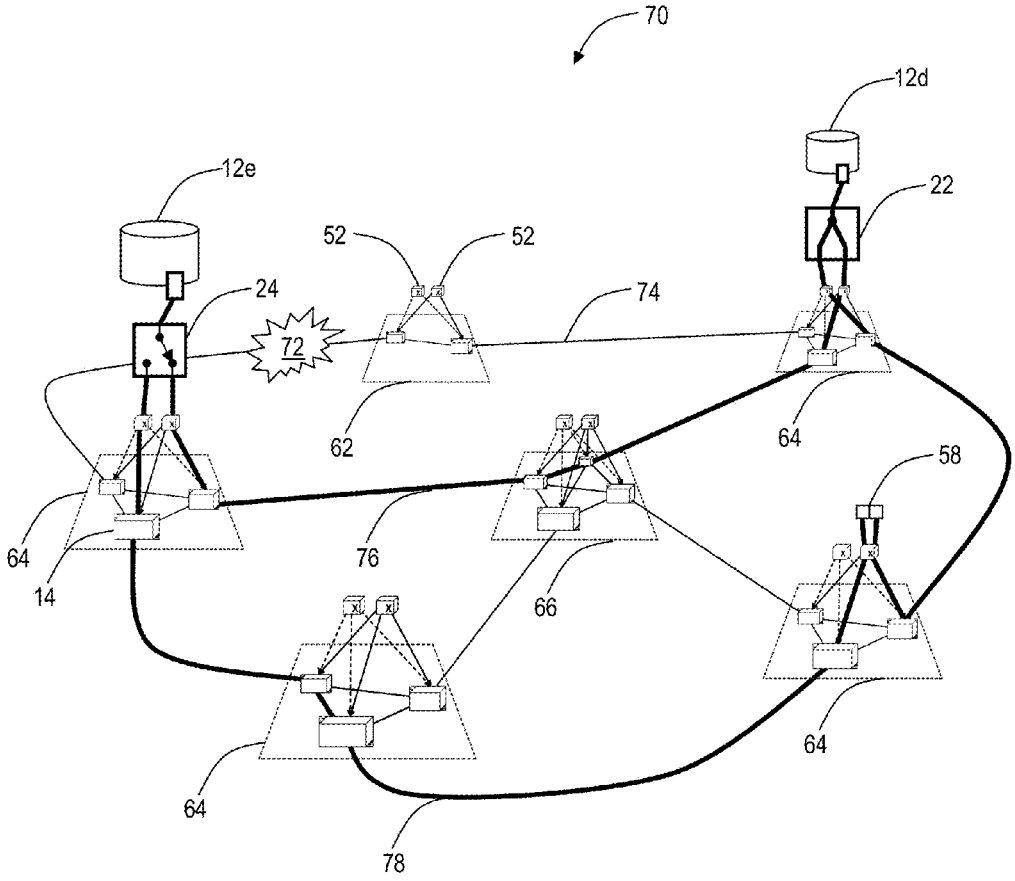

FIG. 16

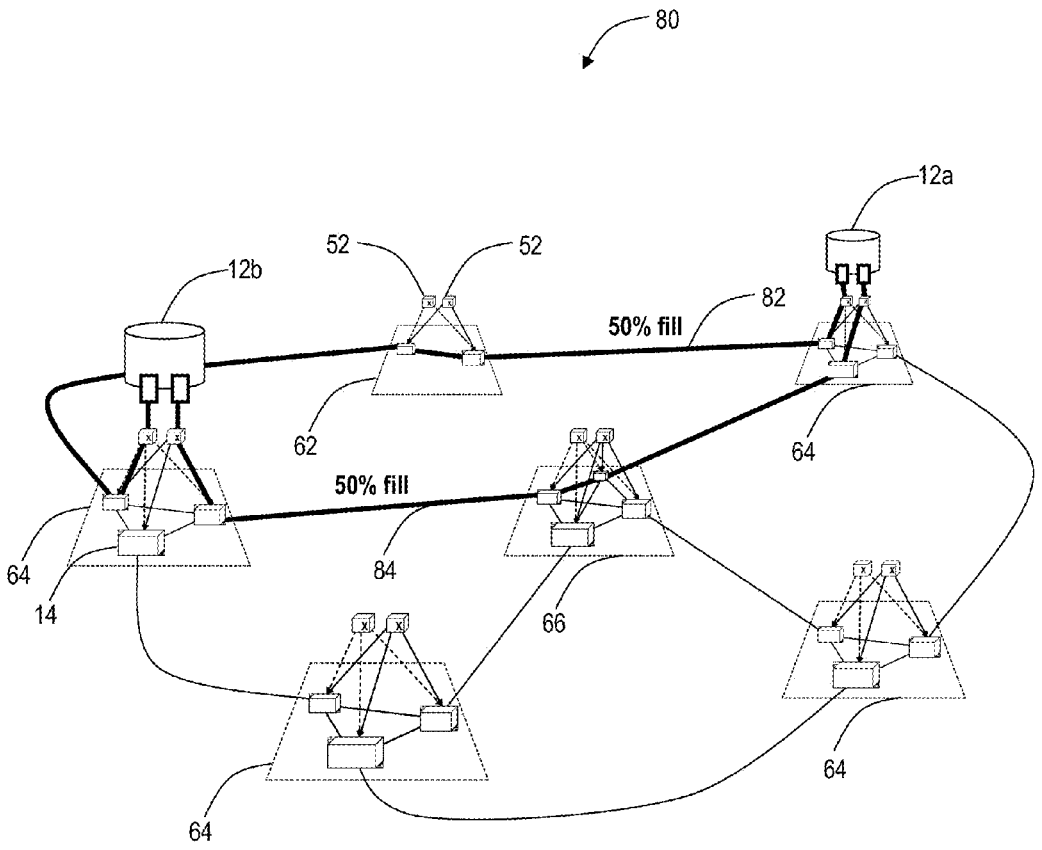

FIG. 17

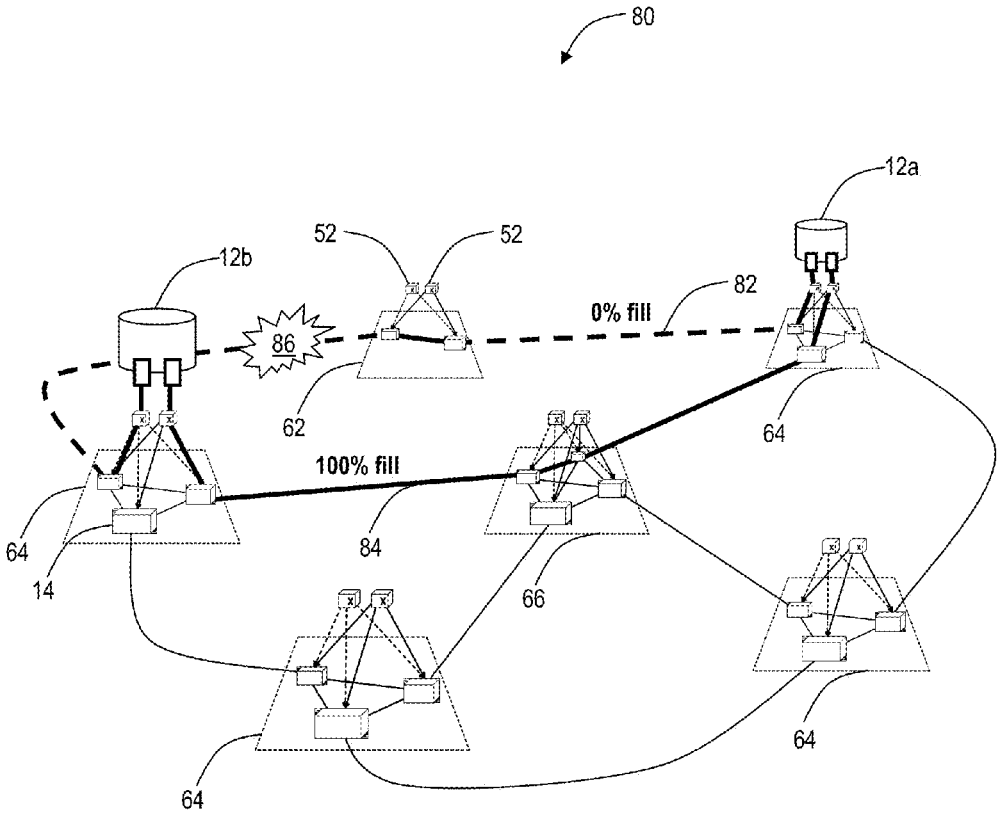

FIG. 18

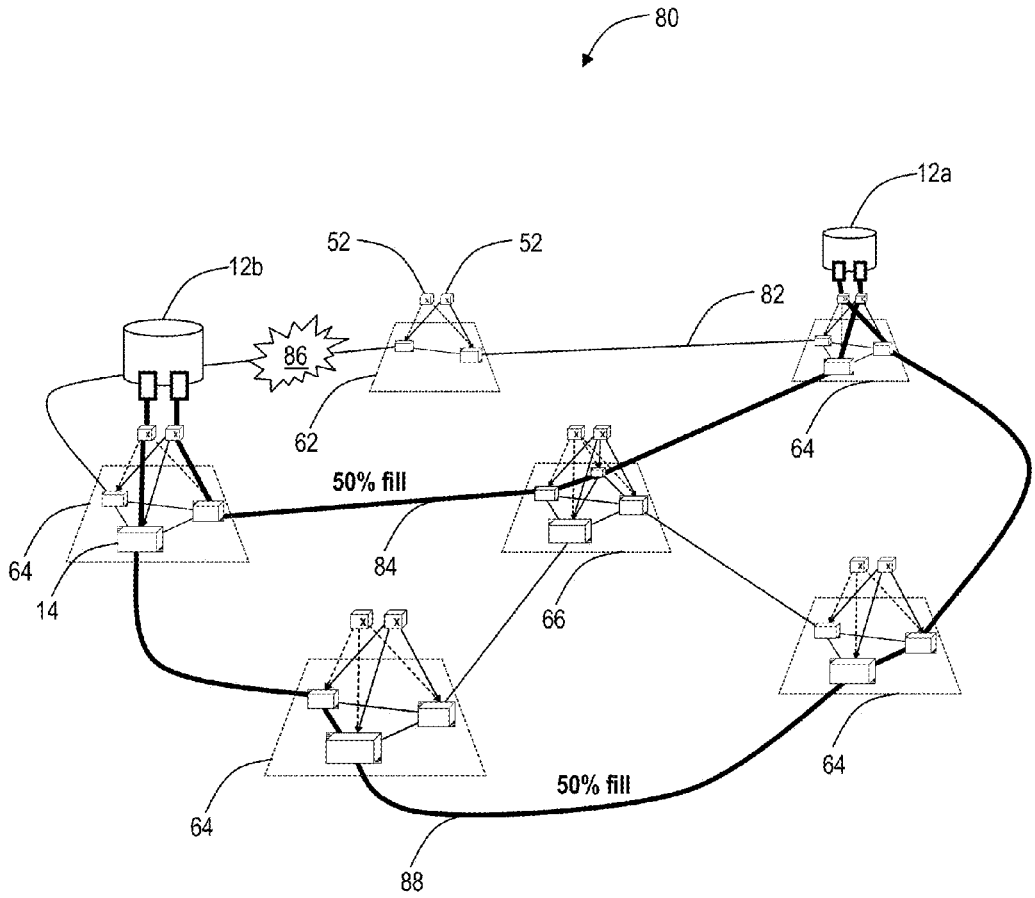

FIG. 19

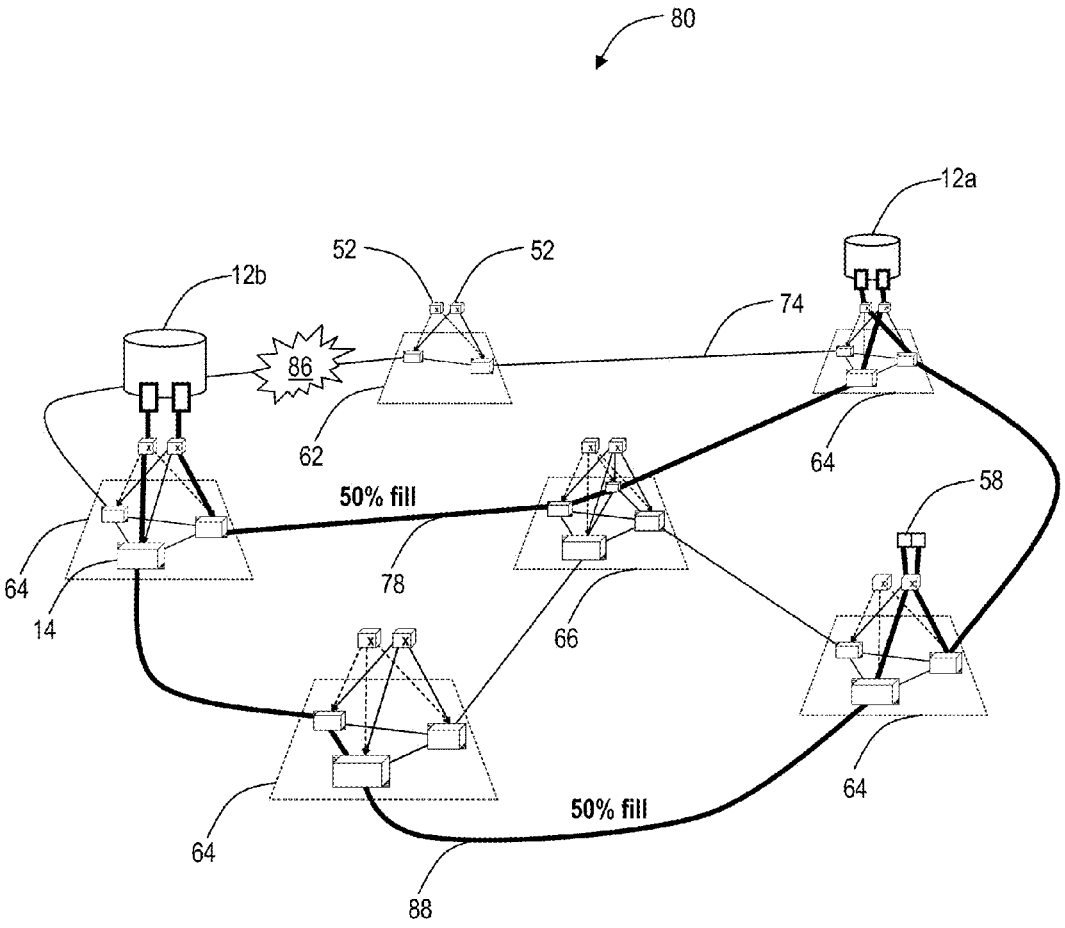

FIG. 20

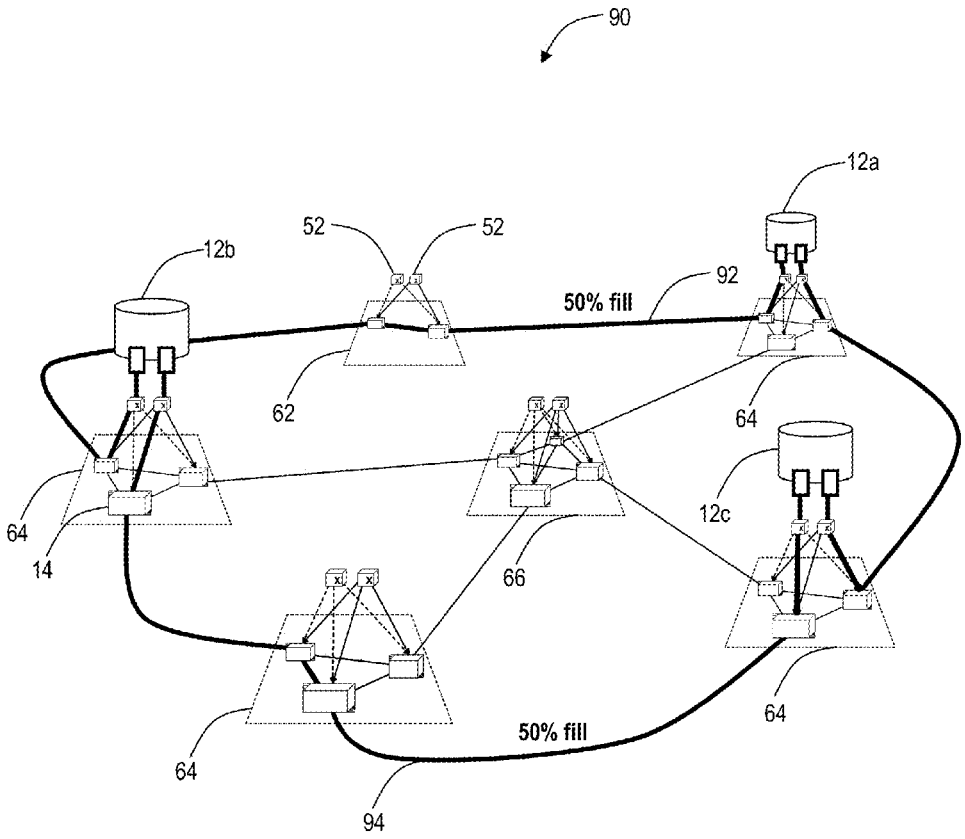

FIG. 21

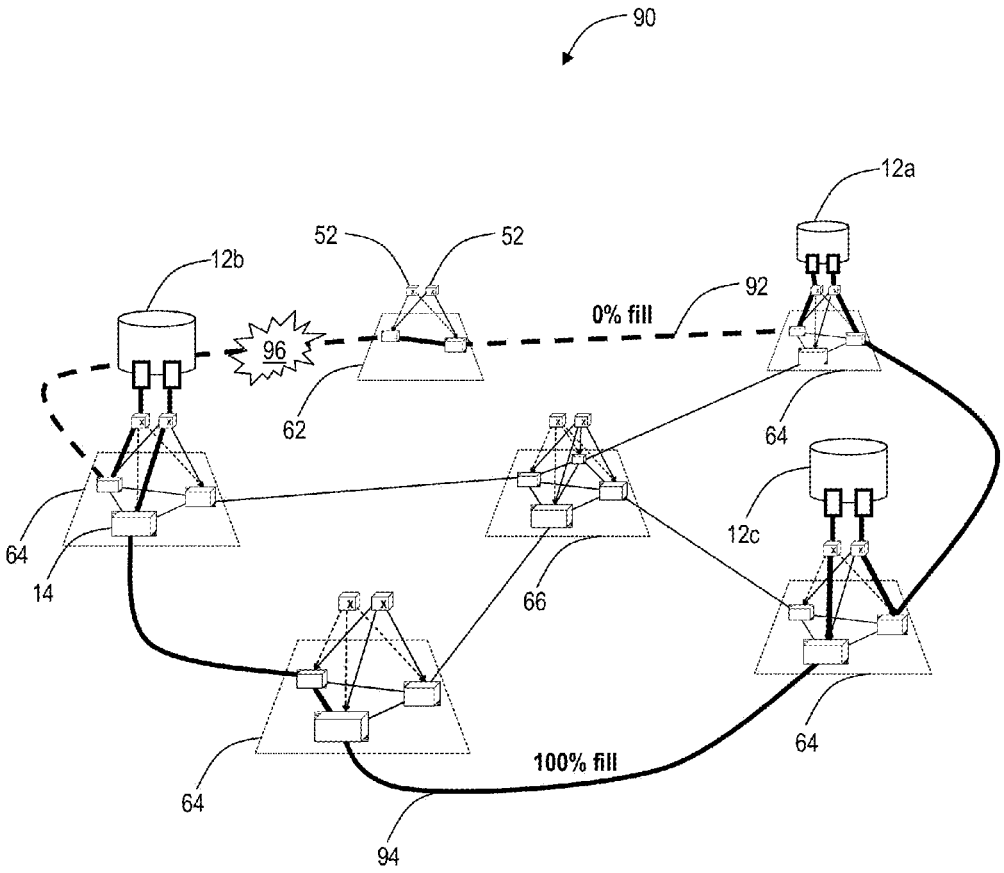

FIG. 22

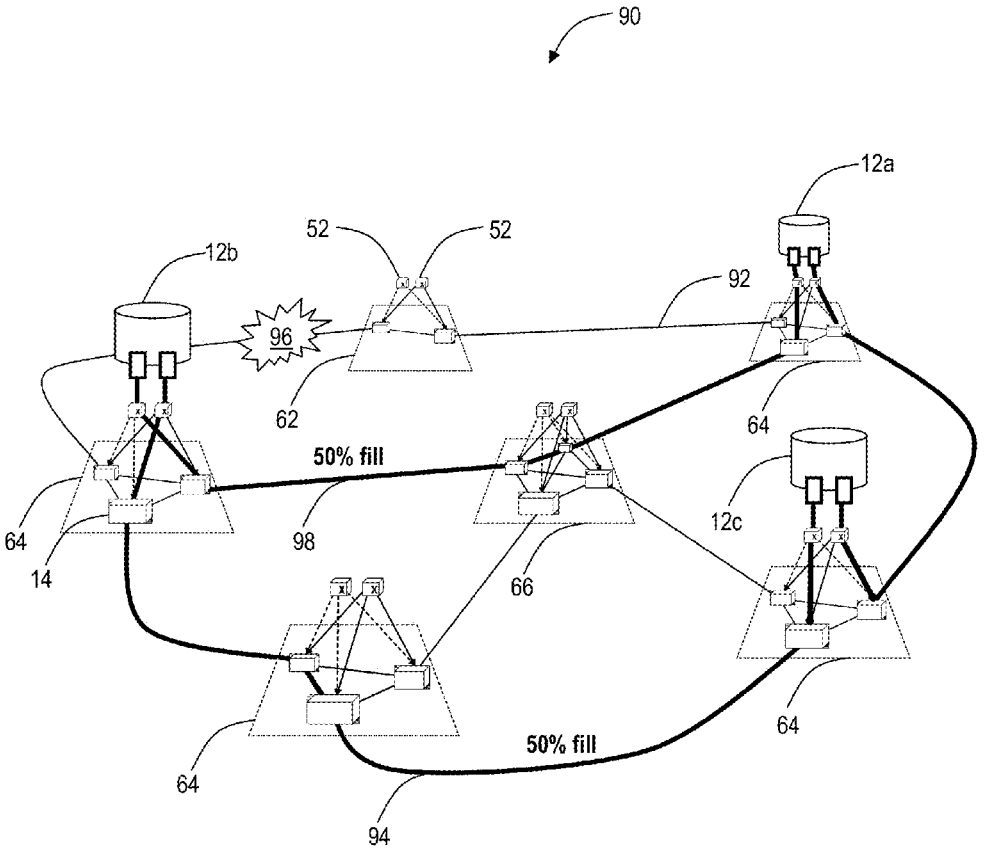

FIG. 23

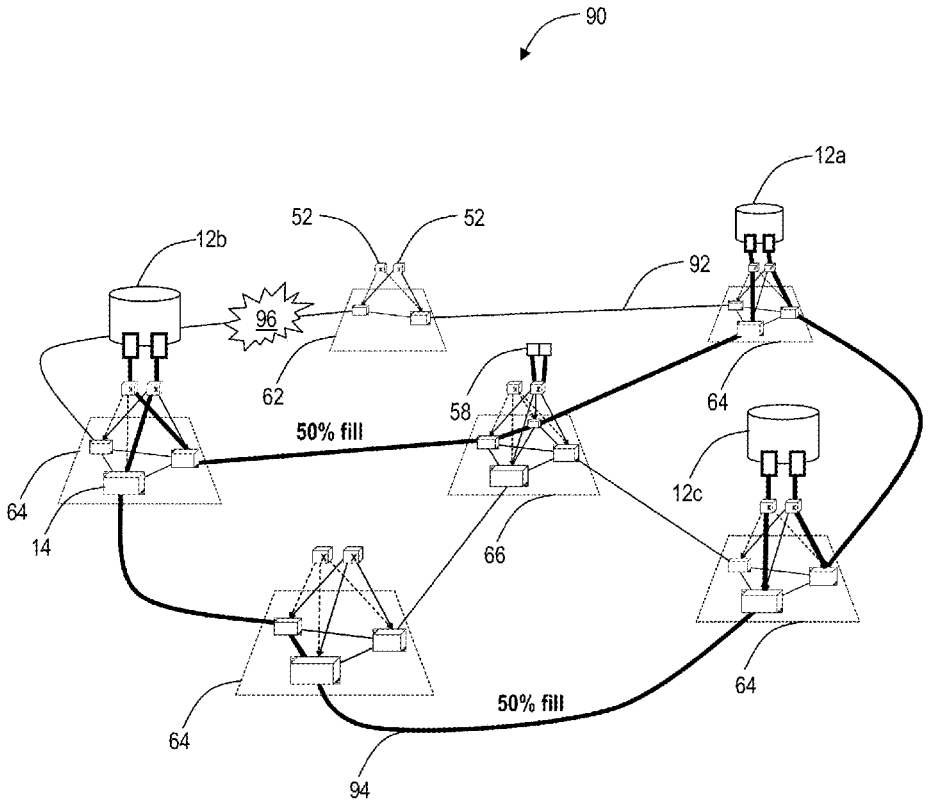

FIG. 24

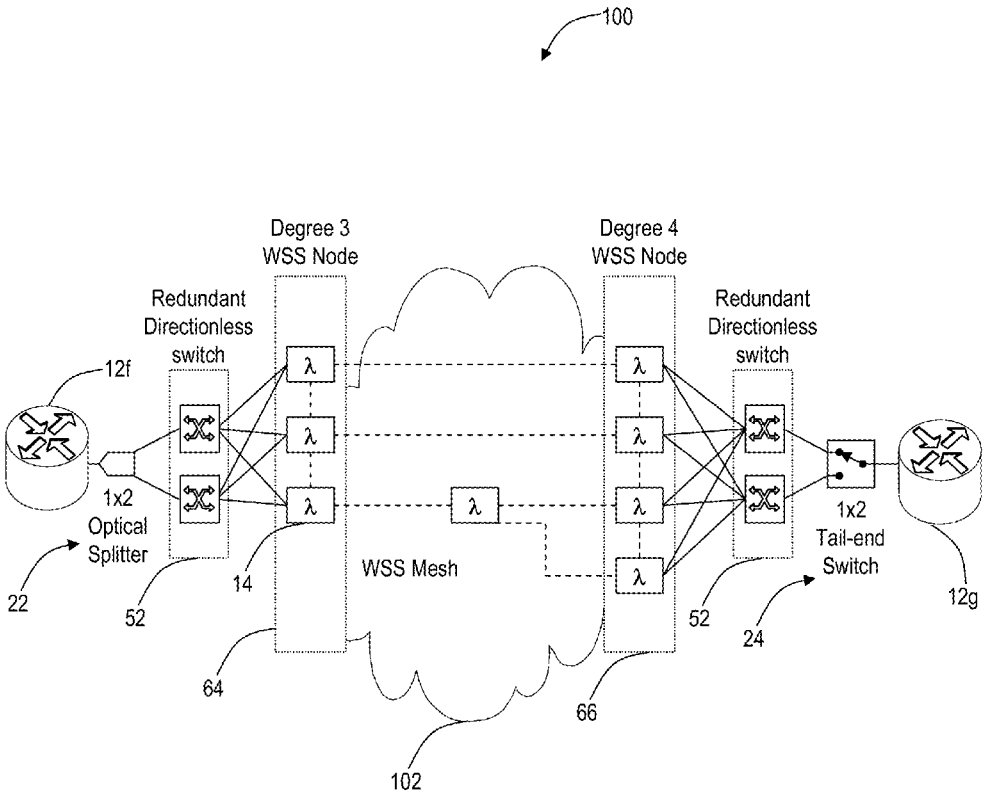
100
Degree 3
WSS Node
Degree 4
WSS Node
Redundant
Directionless
switch
Redundant
Directionless
switch
12f
λ
1x2
Optical
Splitter
22
52
14
64
WSS Mesh
102
66
52
24
1x2
Tail-end
Switch
12g

FIG. 25

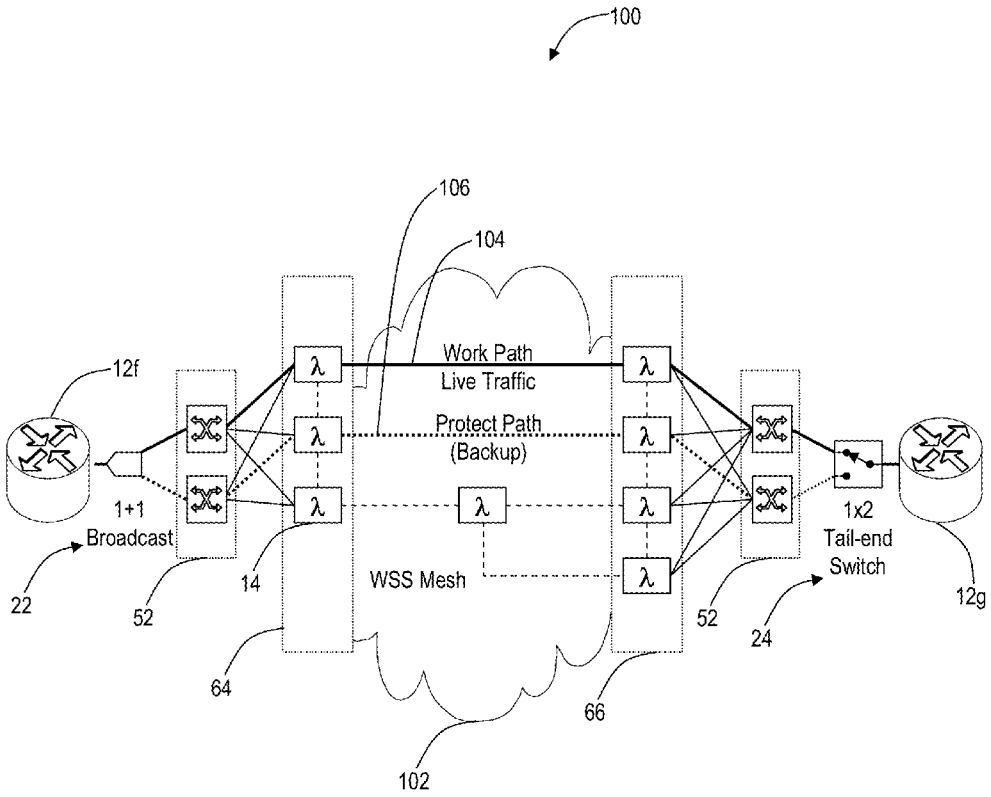
100
106
104
12f
Work Path
Live Traffic
Protect Path
(Backup)
1+1
Broadcast
1x2
Tail-end
Switch
WSS Mesh
22
52
14
64
102
66
52
24
12g

FIG. 26

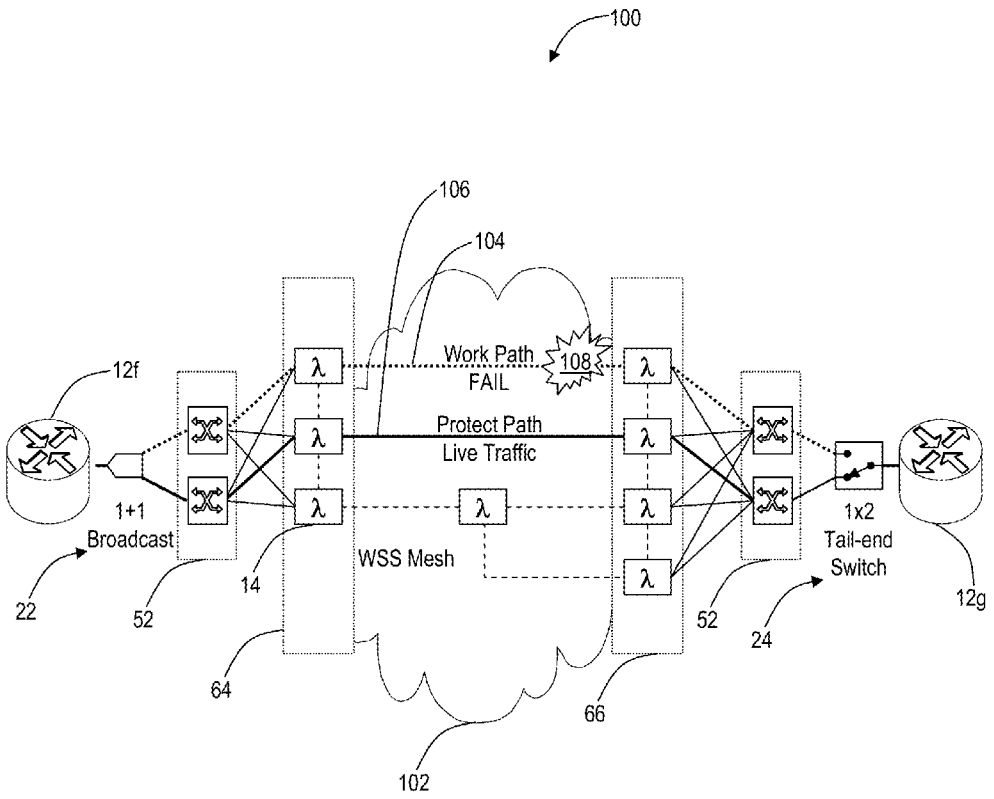
100
106
104
Work Path
FAIL
108
Protect Path
Live Traffic
12f
1+1
Broadcast
WSS Mesh
1x2
Tail-end
Switch
12g
22
52
14
64
102
66
52
24

FIG. 27

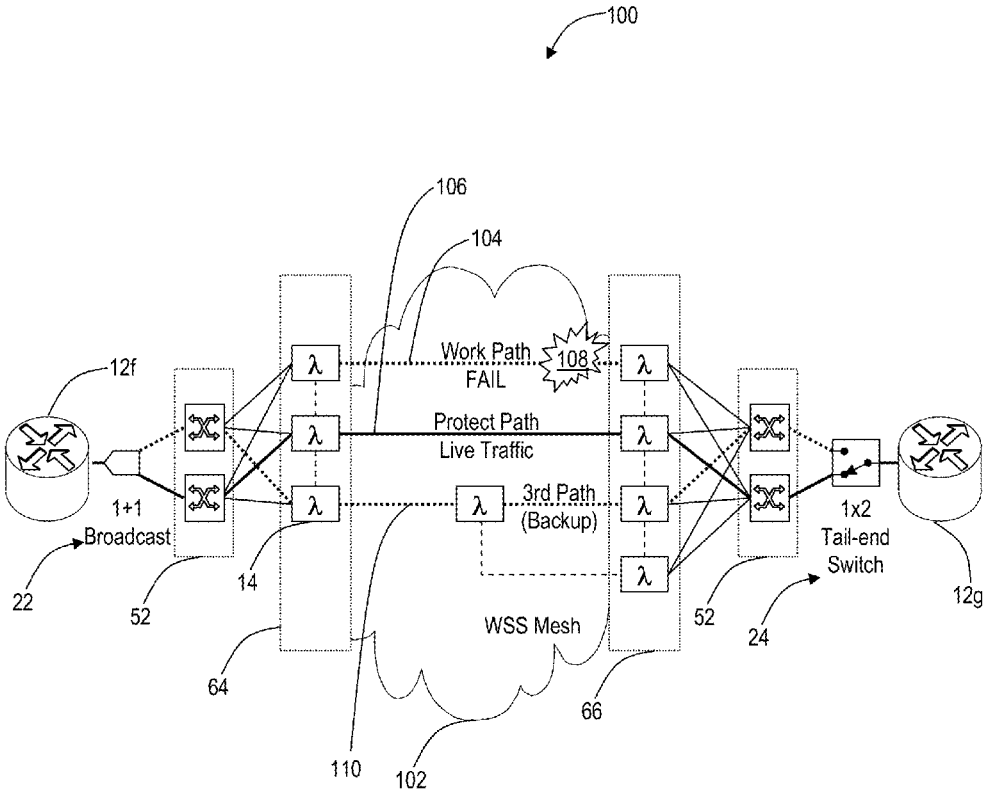
100
106
104
Work Path
FAIL
108
Protect Path
Live Traffic
3rd Path
(Backup)
WSS Mesh
12f
1+1
Broadcast
22
52
14
64
110
102
66
52
24
1x2
Tail-end
Switch
12g

FIG. 28

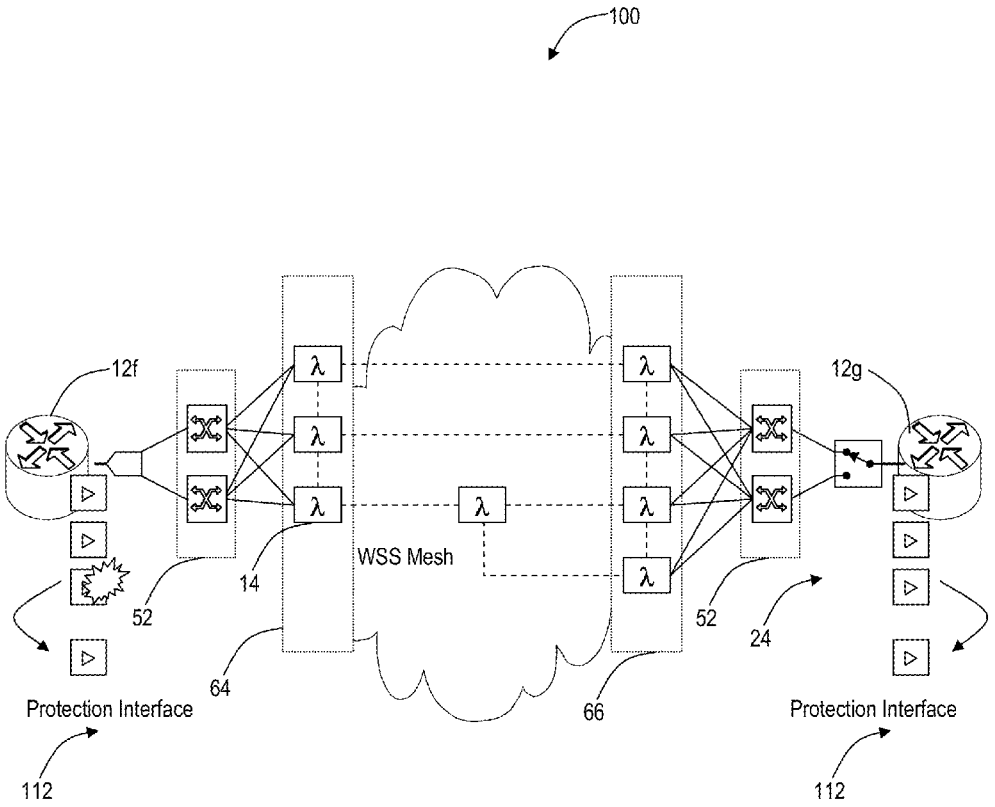
100
12f
12g
λ
WSS Mesh
14
52
64
66
52
24
Protection Interface
Protection Interface
112
112

FIG. 29

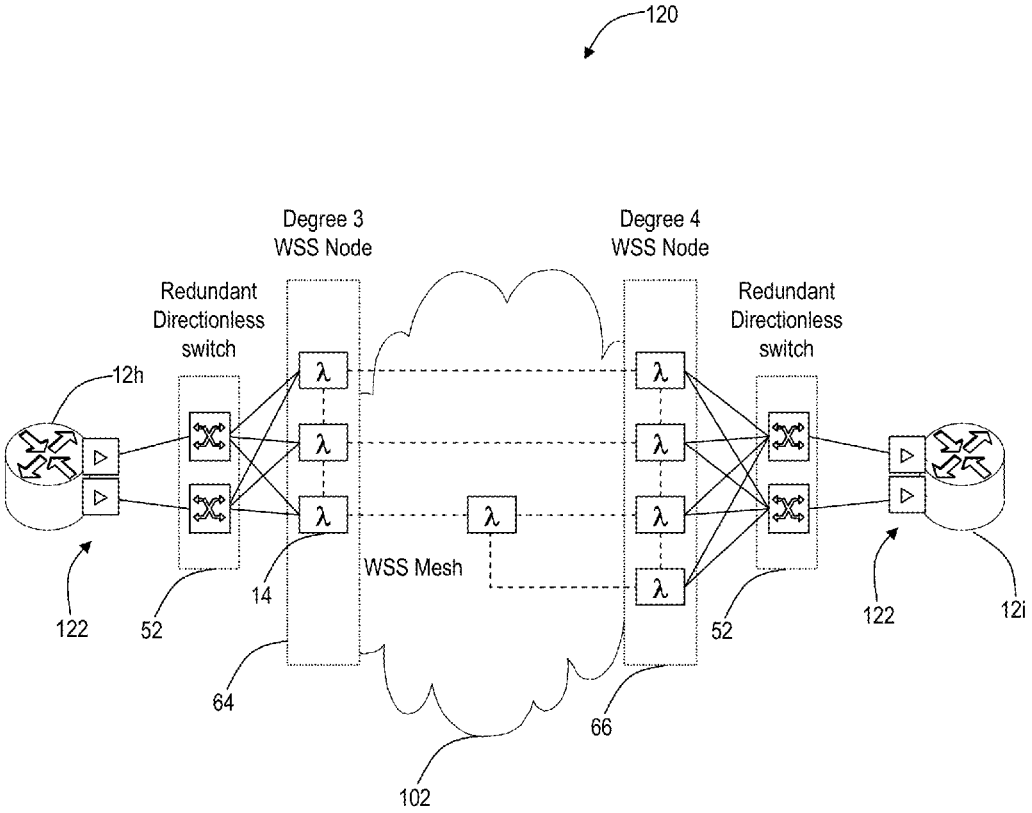
120
Degree 3
WSS Node
Degree 4
WSS Node
Redundant
Directionless
switch
Redundant
Directionless
switch
12h
λ
WSS Mesh
122
52
14
64
66
52
122
12i
102

FIG. 30

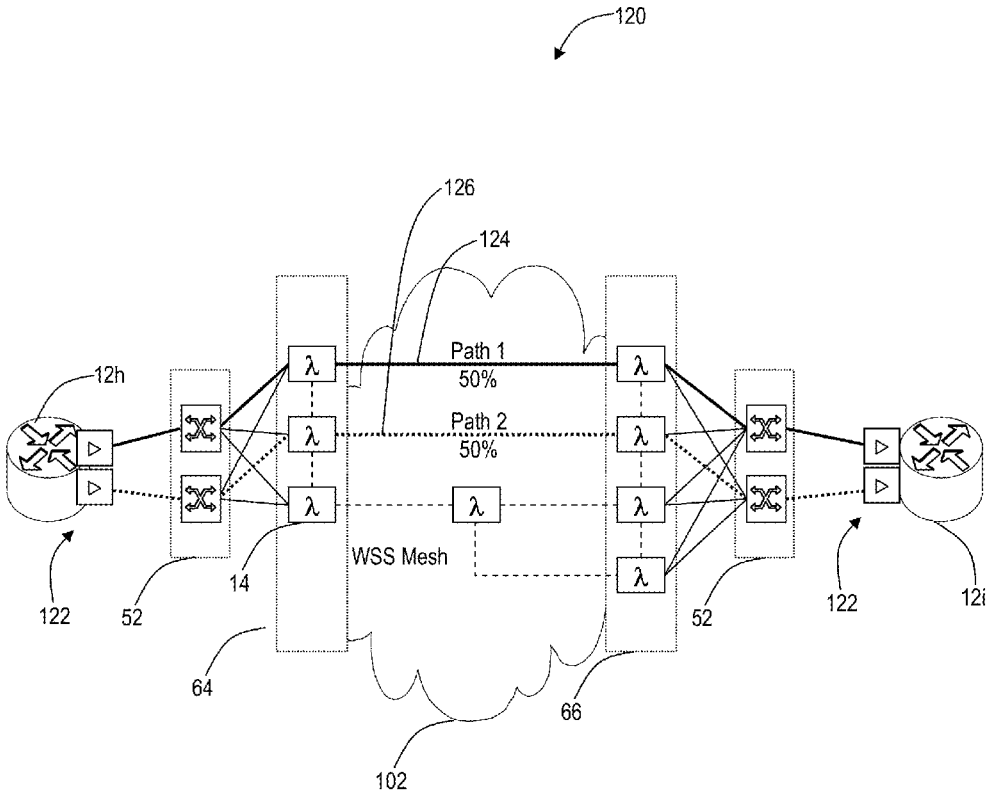
120
126
124
12h
Path 1
50%
Path 2
50%
λ
WSS Mesh
122
52
14
64
102
66
52
122
12i

FIG. 31

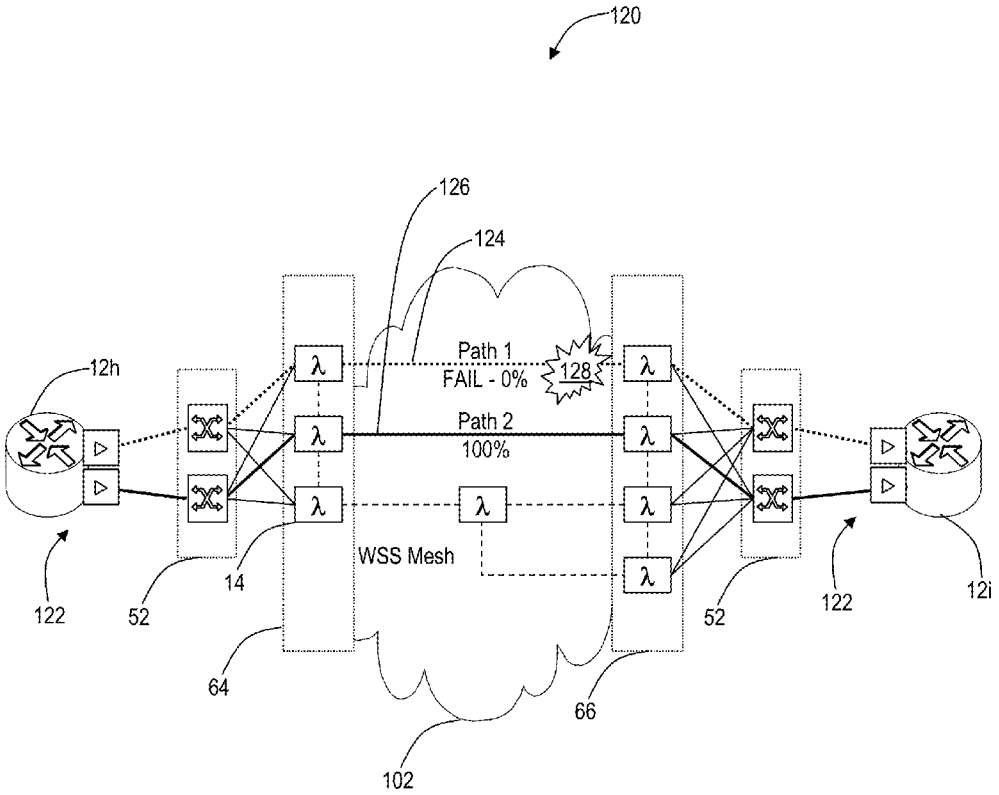
120
126
124
12h
Path 1
FAIL - 0%
128
Path 2
100%
WSS Mesh
122
52
14
64
102
66
52
122
12i

FIG. 32

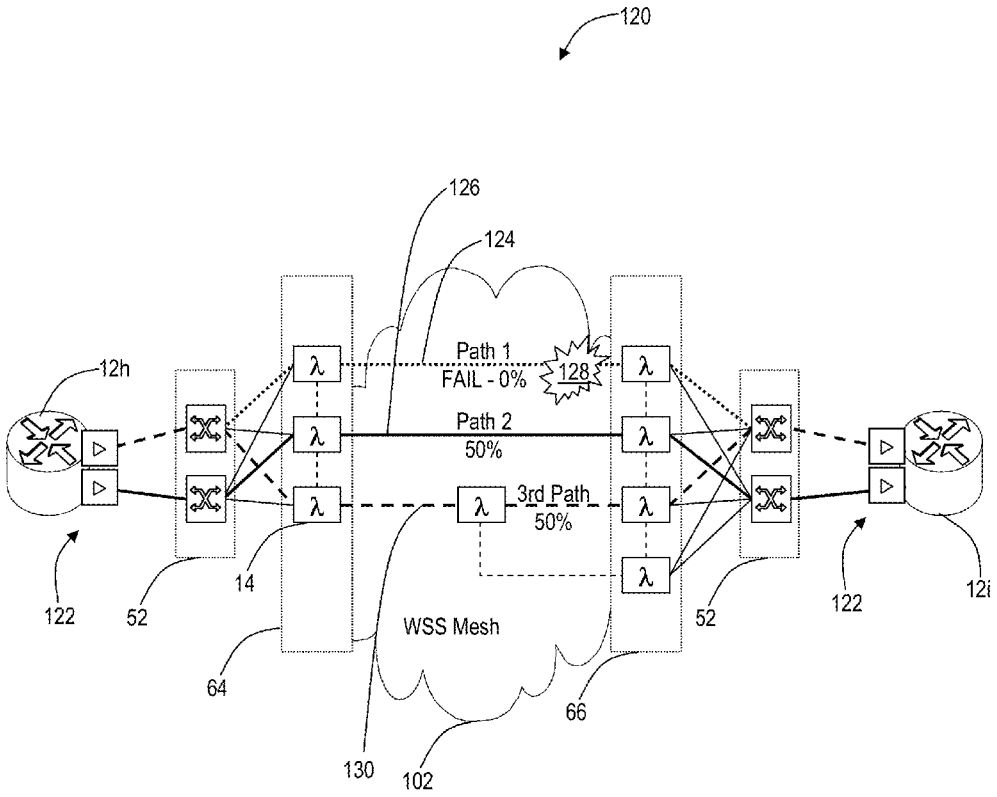
120
126
124
12h
Path 1
FAIL - 0%
128
Path 2
50%
3rd Path
50%
λ
122
52
14
64
WSS Mesh
130
102
66
52
122
12i

FIG. 33

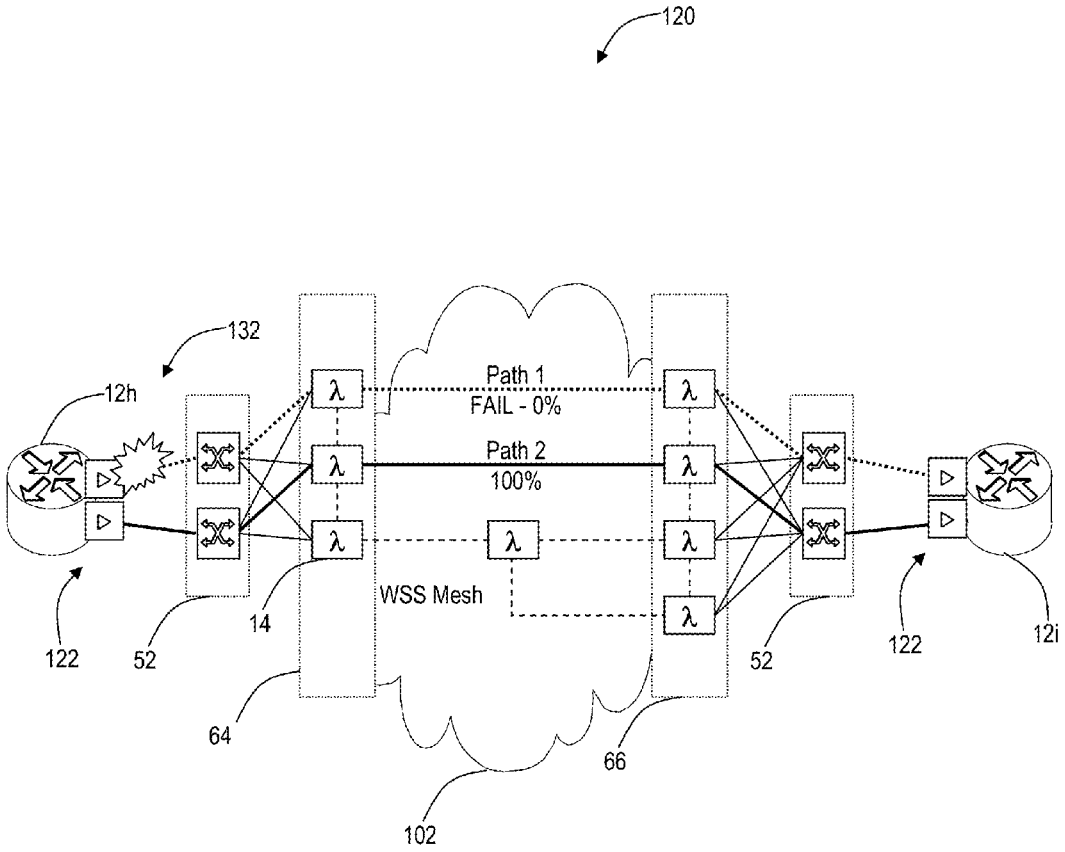
120
132
12h
Path 1
FAIL - 0%
Path 2
100%
WSS Mesh
λ
122
52
14
64
102
66
52
122
12i

FIG. 34

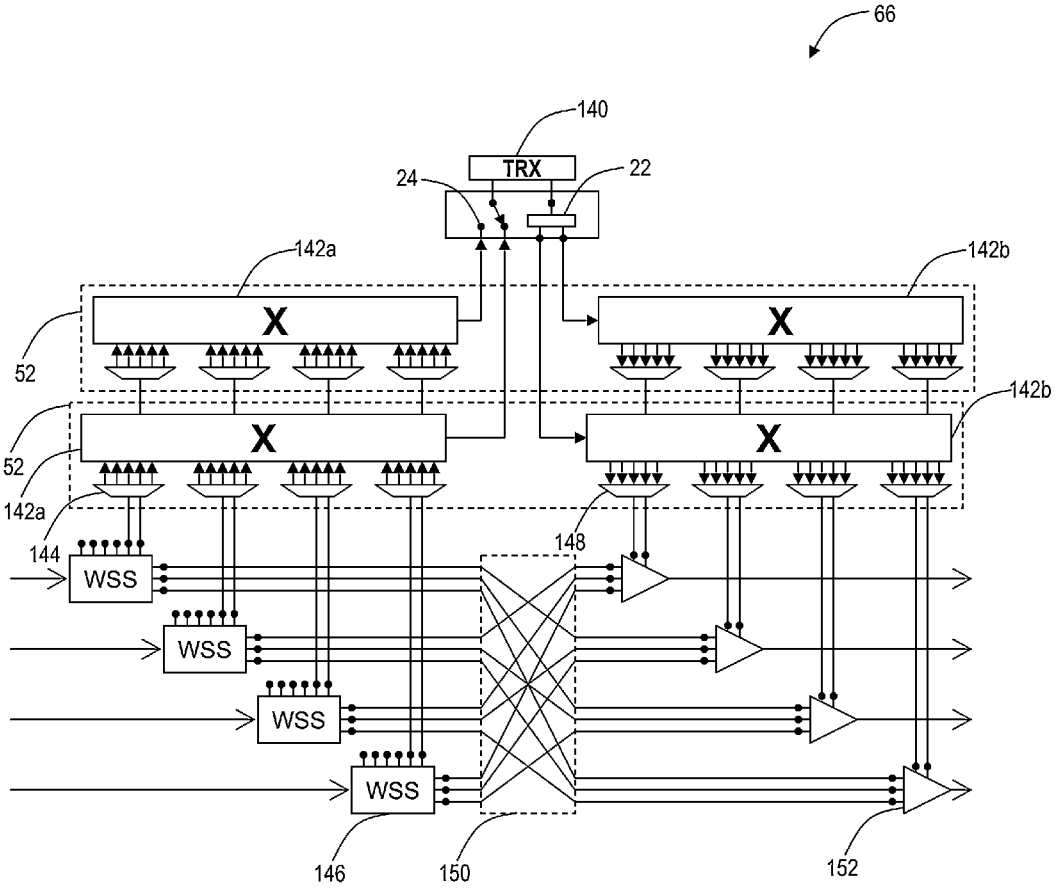
66
140
TRX
24
22
142a
142b
X
X
52
142b
X
X
52
142a
144
148
WSS
WSS
WSS
WSS
146
150
152

FIG. 35

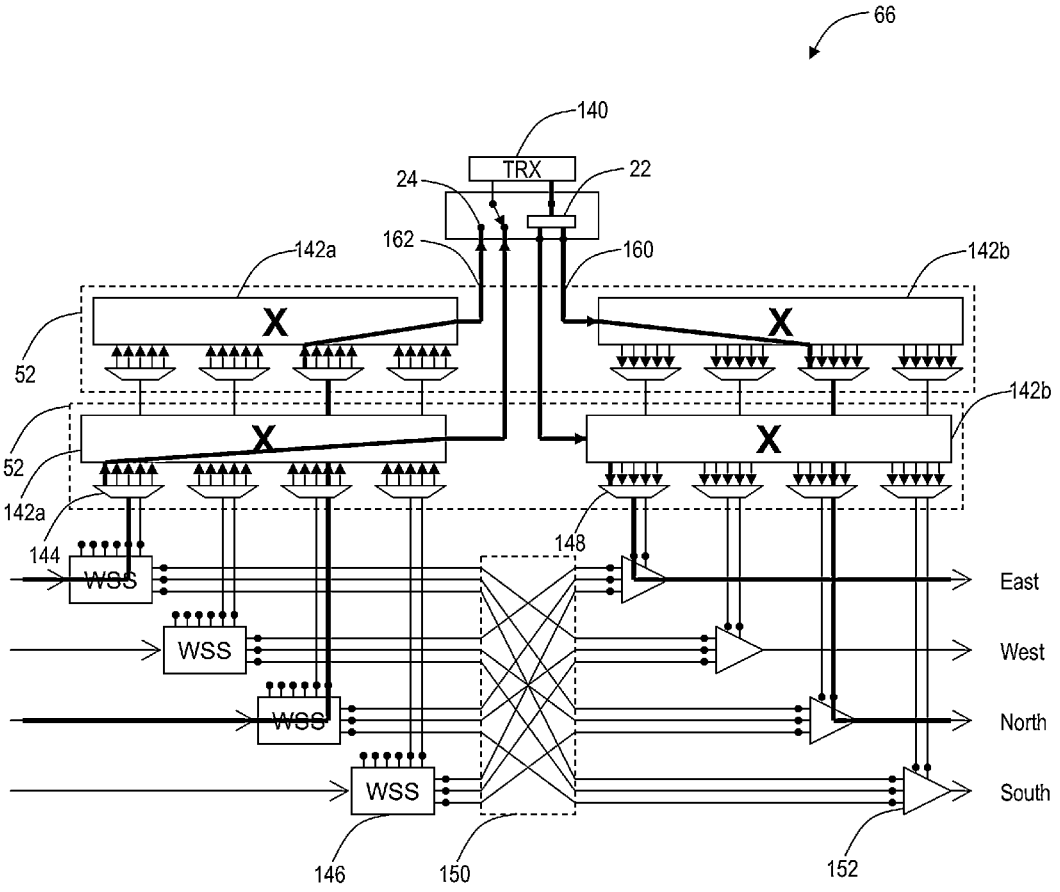
66
140
TRX
24
22
162
160
142a
142b
X
X
52
142b
X
X
52
142a
144
148
WSS
WSS
WSS
WSS
East
West
North
South
146
150
152

FIG. 36

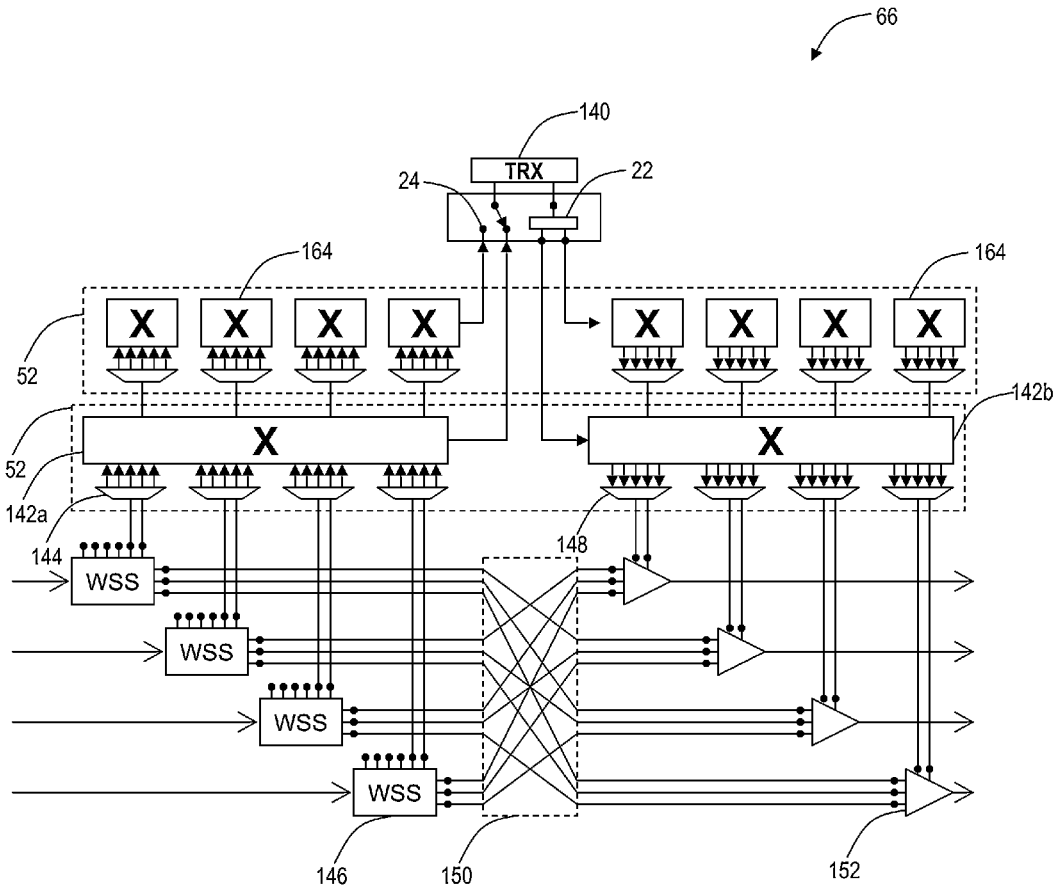

FIG. 37

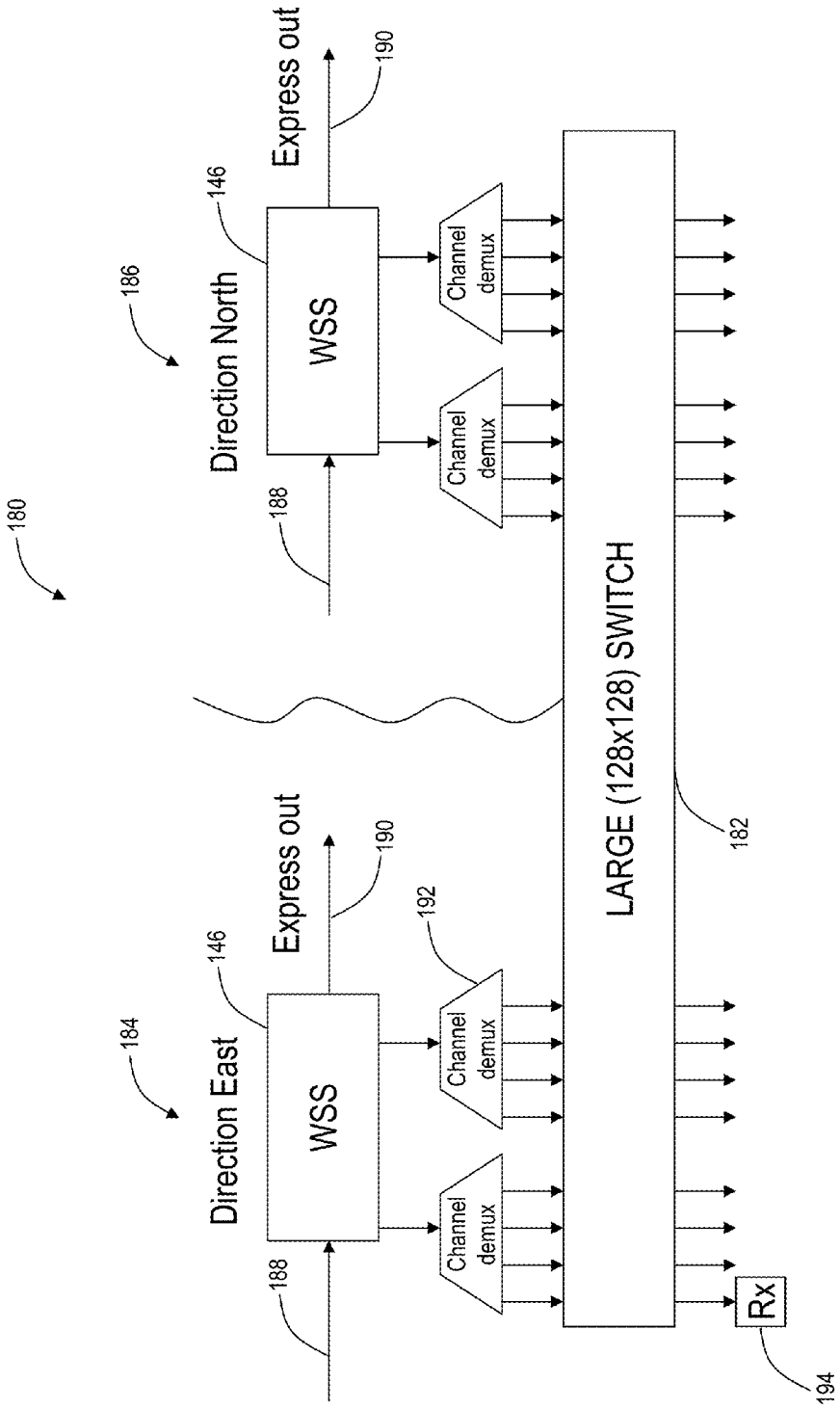
180
186
Direction North
146
WSS
Express out
190
188
Channel demux
Channel demux
LARGE (128x128) SWITCH
182
184
Direction East
146
WSS
Express out
190
192
188
Channel demux
Channel demux
Rx
194

FIG. 38

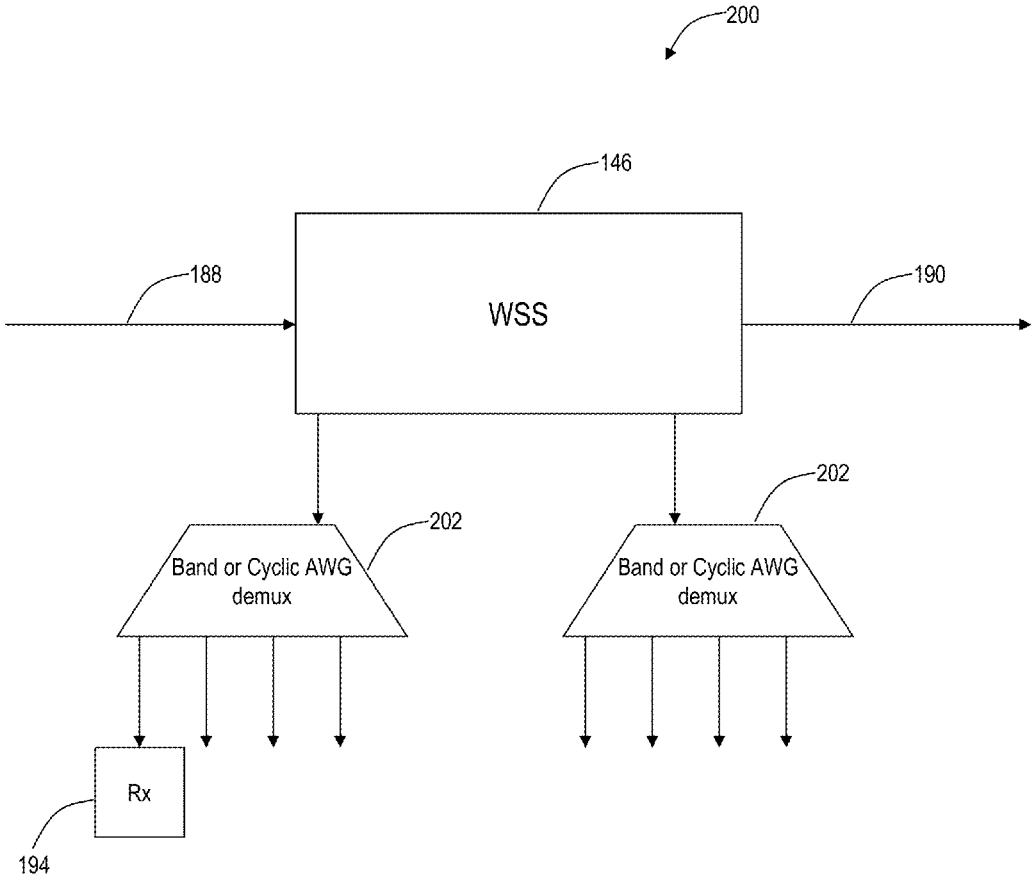
200
146
188
WSS
190
202
202
Band or Cyclic AWG demux
Band or Cyclic AWG demux
Rx
194

FIG. 39

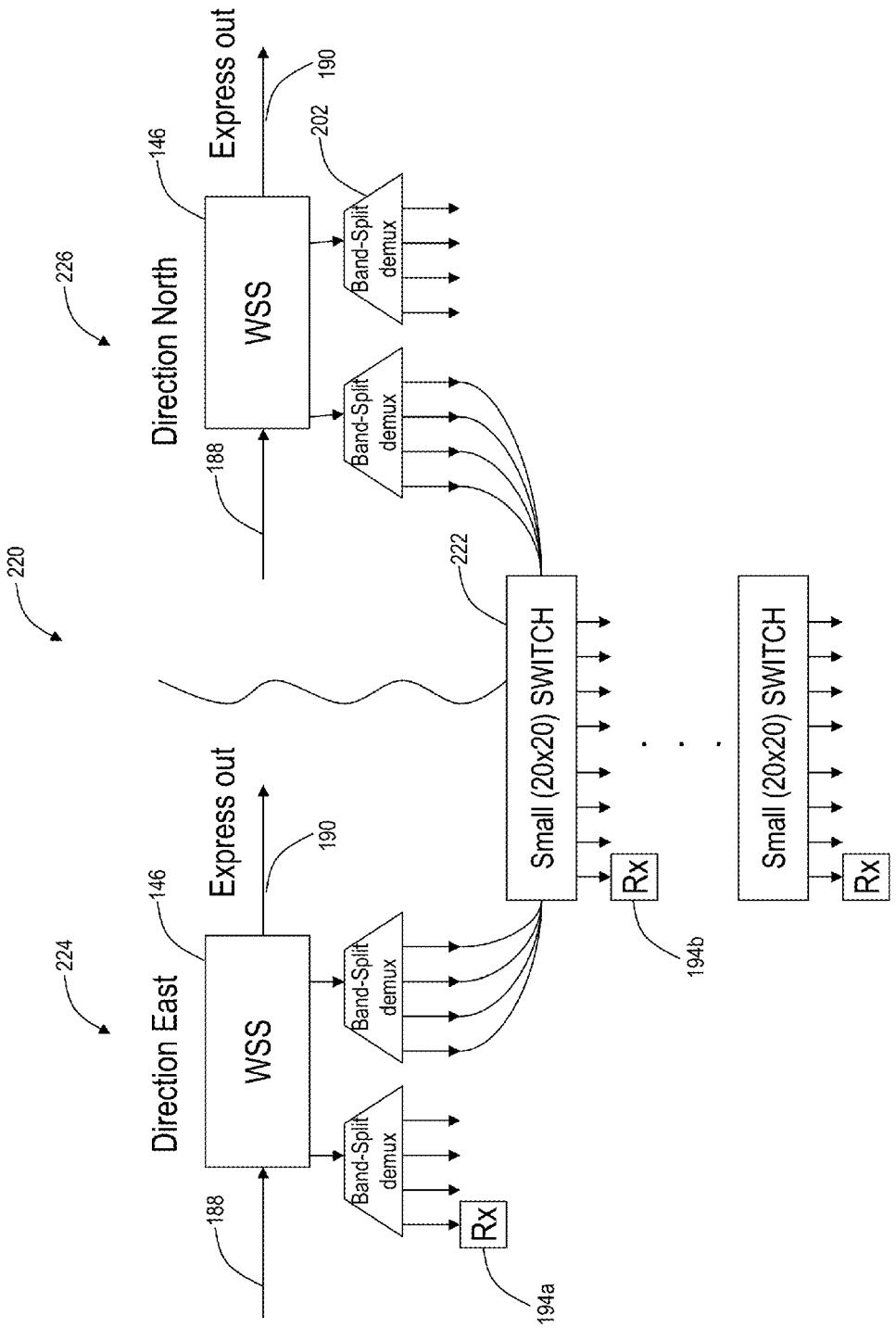
220
226
224
Direction North
Direction East
WSS
WSS
146
146
Express out
Express out
190
190
188
188
202
Band-Split demux
Band-Split demux
Band-Split demux
Band-Split demux
222
Small (20x20) SWITCH
Small (20x20) SWITCH
Rx
Rx
Rx
194a
194b

FIG. 40

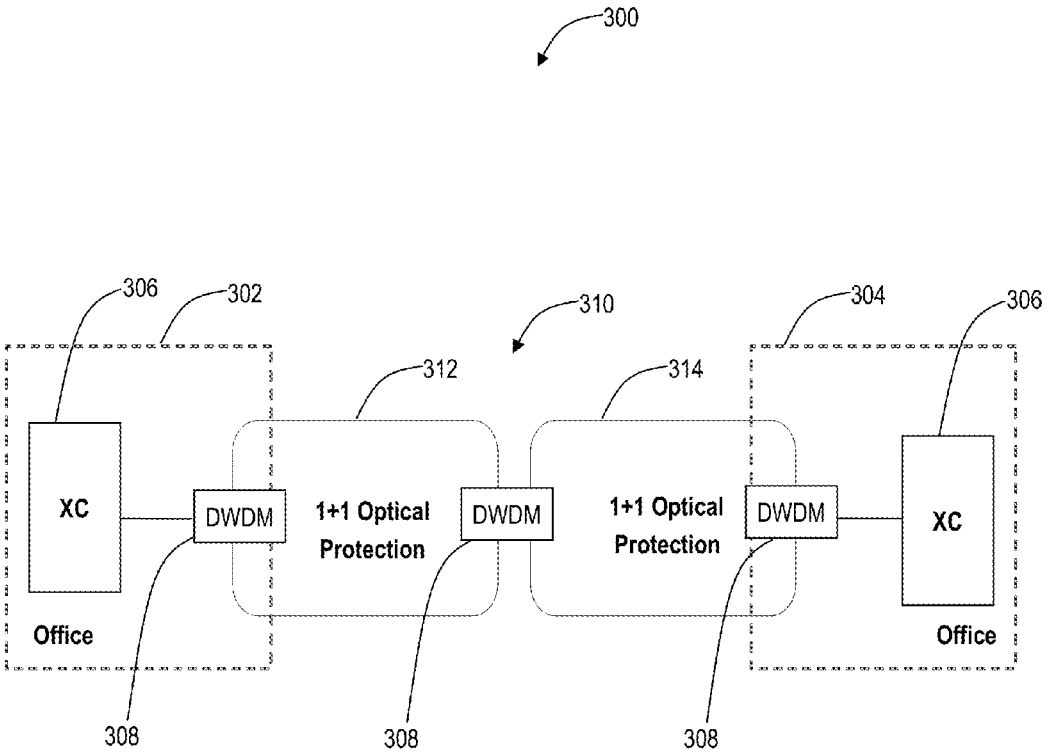
300
306
302
310
304
306
312
314
XC
DWDM
1+1 Optical
Protection
DWDM
1+1 Optical
Protection
DWDM
XC
Office
Office
308
308
308

FIG. 41

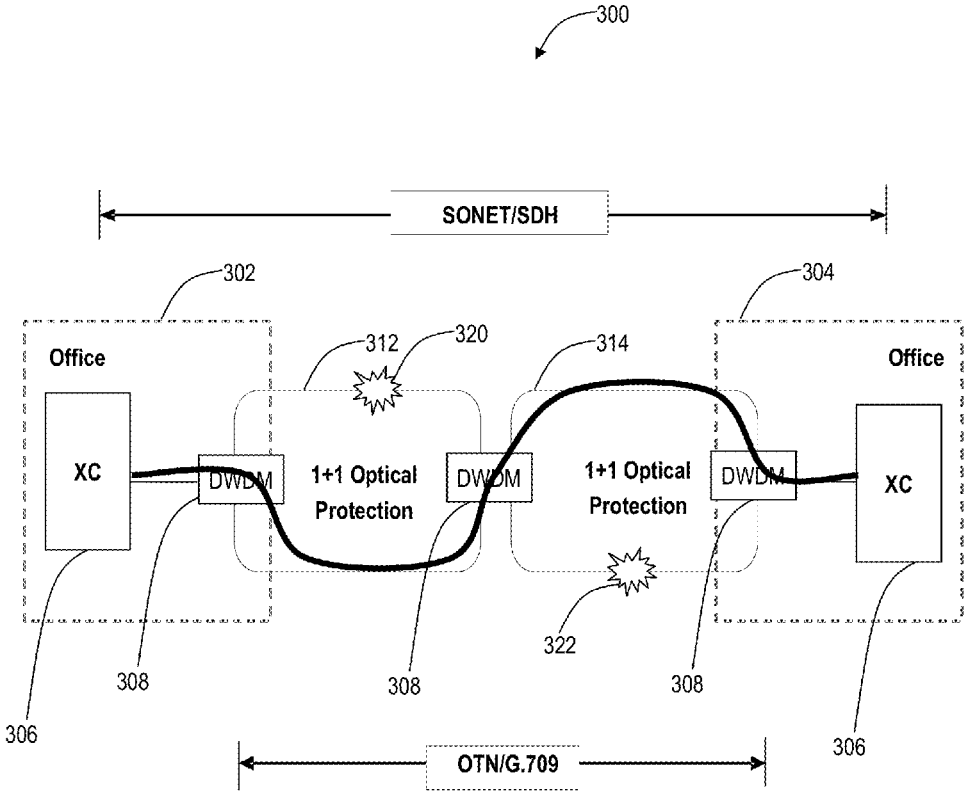
300
SONET/SDH
302
304
Office
Office
312
320
314
XC
DWDM
1+1 Optical Protection
DWDM
1+1 Optical Protection
DWDM
XC
322
308
308
308
306
306
OTN/G.709

FIG. 42

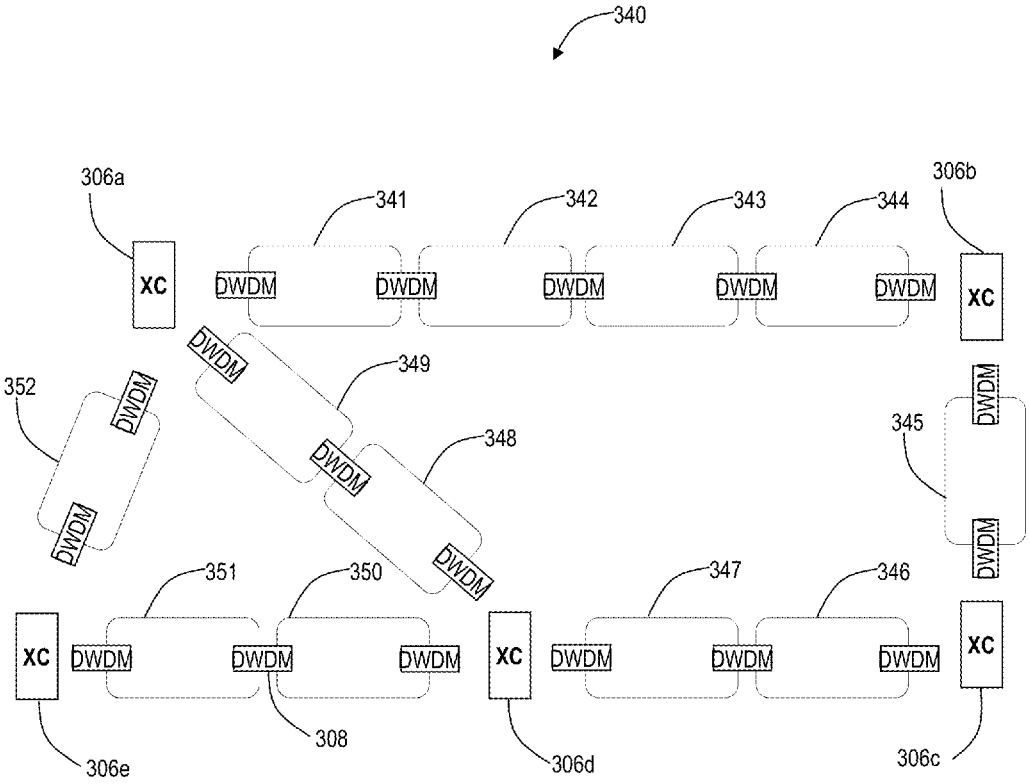
340
306a
306b
341
342
343
344
XC
DWDM
349
348
352
345
351
350
347
346
308
306e
306d
306c

FIG. 43

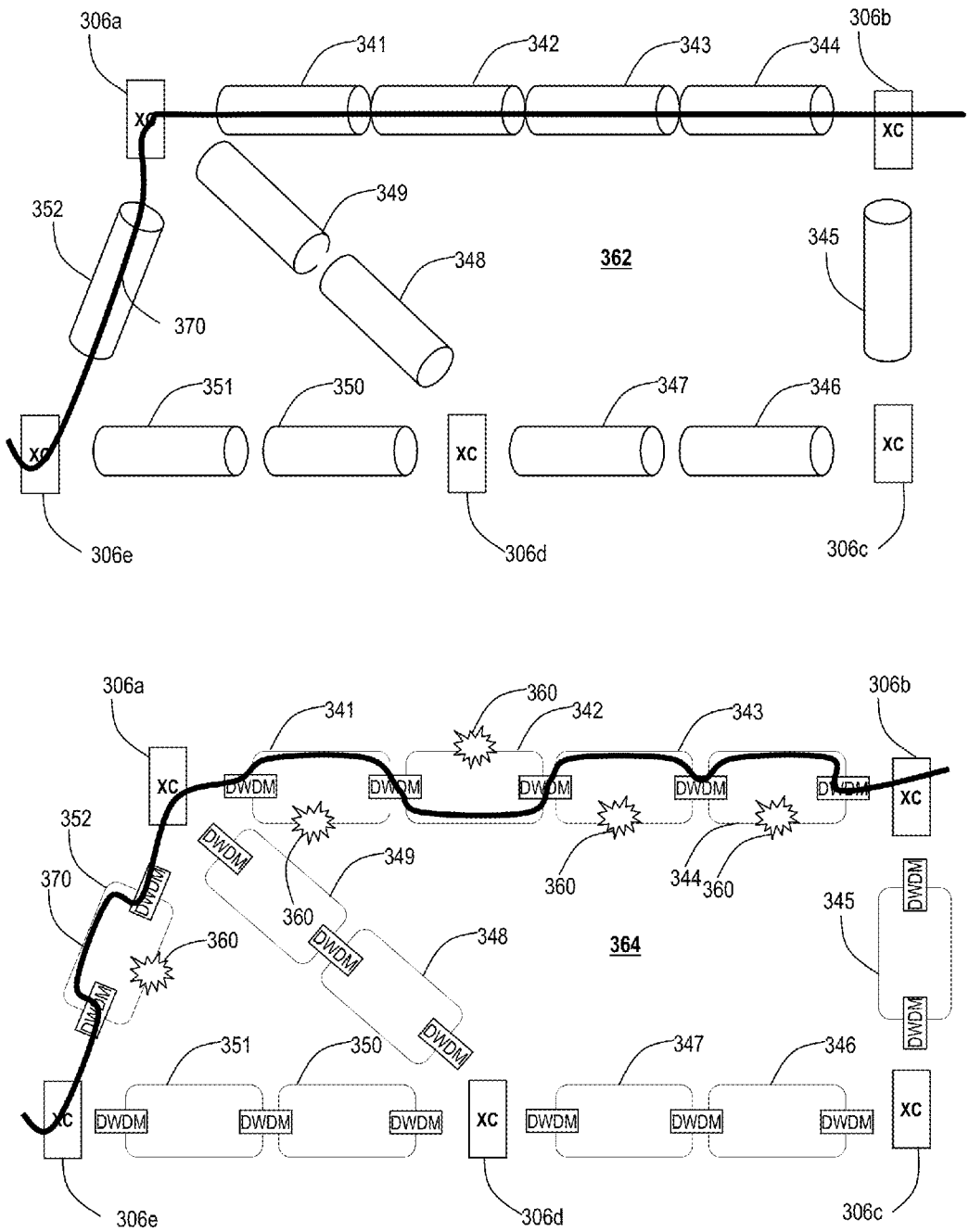
306a
341
342
343
344
306b
XC
XC
352
349
348
362
345
370
351
350
347
346
XC
XC
XC
306e
306d
306c
306a
341
360
342
343
306b
XC
DWDM
DWDM
DWDM
DWDM
DWDM
XC
352
DWDM
349
370
DWDM
360
360
344
360
345
DWDM
360
DWDM
348
364
DWDM
DWDM
351
350
347
346
XC
DWDM
DWDM
DWDM
XC
DWDM
DWDM
DWDM
XC
306e
306d
306c

FIG. 44

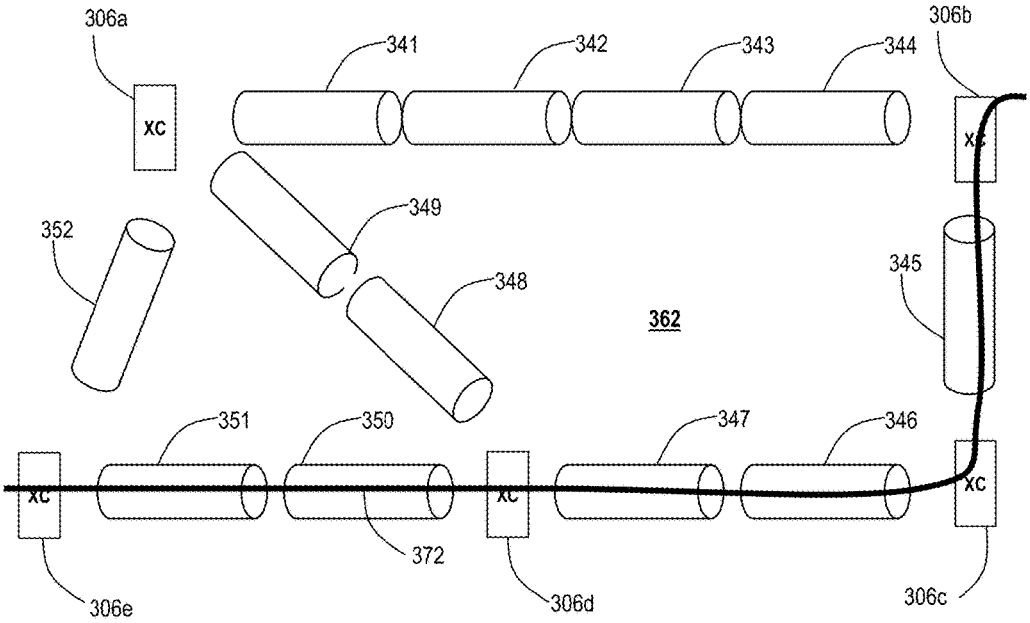
306a
306b
341
342
343
344
XC
349
352
348
345
362
351
350
347
346
372
306e
306d
306c

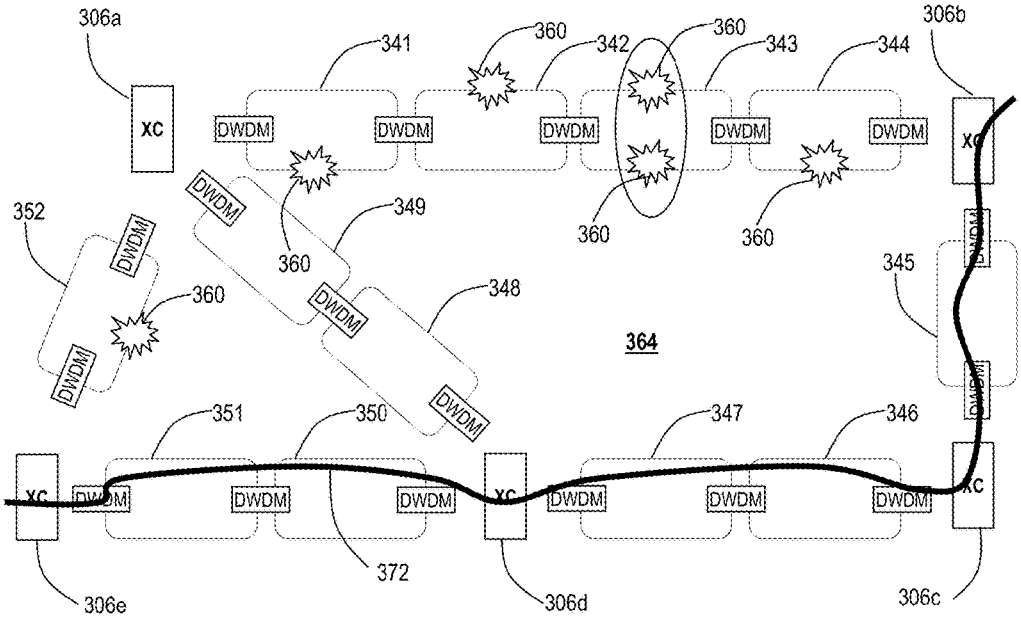
306a
306b
341
360
342
360
343
344
XC
DWDM
349
352
345
348
364
351
350
347
346
372
306e
306d
306c

FIG. 45

DIRECTIONLESS OPTICAL ARCHITECTURE AND HIGHLY AVAILABLE NETWORK AND PHOTONIC RESILIENCE METHODS

CROSS-REFERENCE TO RELATED APPLICATIONS

The present non-provisional patent application/patent is a continuation of U.S. patent application Ser. No. 12/045,933, filed on Mar. 11, 2008, and entitled "DIRECTIONLESS OPTICAL ARCHITECTURE AND HIGHLY AVAILABLE NETWORK AND PHOTONIC RESILIENCE METHODS," the contents of which are incorporated in full by reference herein.

FIELD OF THE INVENTION

The present invention relates generally to optical networks. More particularly, the present invention provides a directionless optical architecture for reconfigurable optical add/drop multiplexers (ROADMs) and wavelength selective switches (WSSs) which can be utilized to provide highly available network, photonic resiliency, and wavelength optimization.

BACKGROUND OF THE INVENTION

As point-to-point Internet Protocol (IP) flows increase in bandwidth, core router connections are being driven to higher capacities. Today, core router interfaces are starting to move from 10 Gbps to 40 Gbps while 100 Gbps connections are already in the planning stage. With this increase in capacity comes a heightened responsibility to maintain high availability service by minimizing the time that these very expensive, high bandwidth connections are out of service due to failure events or scheduled maintenance activities.

Referring to FIGS. **1** and **2**, a network **10** illustrates core routers **12***a*,**12***b*,**12***c* with mesh connections directly over a statically provisioned wavelength division multiplexed (WDM) transport layer. The core routers **12***a*,**12***b*,**12***c* can include IP routers with direct optical interfaces, such as 10 Gbps, 40 Gbps, etc. In this example, each core router **12***a*, **12***b*,**12***c* connects optically to a Wavelength Selective Switch (WSS) **14**. The network **10** includes multiple WSSs **14** at various geographically-diverse locations **16** where regeneration of signals may take place or where other signals may be added to or dropped from the WDM line. The WSSs **14** are configured to receive a client signal, such as from the core routers **12***a*,**12***b*,**12***c*, and to provide a WDM line signal formed by multiplexing multiple client signals, such as with an optical multiplexer with optical filters (not shown). Each node can also include other components (not shown), such as optical amplifiers, dispersion compensation modules (DCM), and the like.

The WSSs **14** connect each of the various locations **16** in a mesh configuration through optical fibers. Conventionally, the core routers **12***a*,**12***b*,**12***c* are connected through the WSSs **14** statically, and bandwidth on each wavelength connection is typically traffic engineered to a predetermined capacity below the maximum possible capacity, such as 50%, 40%, 20%, etc., so as to accommodate a layer three initiated roll over of traffic from a failed link to a working link upon a network failure, such as a fiber cut, equipment failure on the WSSs **14**, failure on the core router **12**, and the like. For example, in FIG. **1**, the core router **12***a* is provisioned over the WSSs **14** to connect to the core routers **12***b* and **12***c* with a maximum of 50% traffic over each link such that in the event of a failure, sufficient capacity is available to accommodate both working and protected traffic.

In FIG. **2**, a failure **18**, e.g. a fiber cut, optical transceiver failure, network maintenance event (note, a maintenance event has the same effect as a failure), etc., is illustrated between the core routers **12***a* and **12***b* causing the traffic to be interrupted on this link, i.e. 0% fill. Here, traffic from the core routers **12***a* and **12***b* is rolled to the links between core routers **12***a* to **12***c* and from core routers **12***b* to **12***c* at layer three by the core routers **12***a*,**12***b*, i.e. the routers located at either end of the failed connection. Now, while the link between core routers **12***a* to **12***b* is out of service, the network **10** is vulnerable to additional failures on links between core routers **12***a* to **12***c* (isolating router **12***a*) and/or between core routers **12***b* to **12***c* (isolating router **12***b*).

While the architecture of the network **10** is reasonably efficient from a capital equipment ("CAPEX") perspective, it raises some challenges that can impact the operating expenses ("OPEX") required to operate and maintain this network **10**. One challenge is associated with how the links between the routers **12***a*,**12***b*,**12***c* are protected. While the link between routers **12***a* to **12***b* is down, the network **10** core is operating in a dangerous condition whereby any second failure could potentially isolate a region of the network **10**. The Median Time to Repair (MTTR) becomes a critical parameter in the calculation of service availability and the corresponding service level agreements (SLAs) that can be offered to end user clients. Providing the ability to provide a new (third) path through the network **10** in the event of such a condition could help to minimize the MTTR for the connection and maintain high connection availability.

Another challenge is associated with the coordination of network maintenance activities between operations personnel who are responsible for the IP network, i.e. routers **12**, and those responsible for the underlying transport connections, i.e. WSSs **14**. Because core router **12** interfaces are directly associated with a statically defined WDM lightpath across the network **10**, it is not possible to separate the two events. Without careful cooperation between operations personnel, it is possible that simultaneous maintenance could occur on links between routers **12***a* to **12***b* (by transport) and between routers **12***a* to **12***c* (by IP) causing unnecessary network disruption. Clearly, providing a mechanism to reconfigure the IP or optical layers independently is advantageous.

The use of optical cross connects (OXCs) based on an electrical switch fabric provides one possible solution that could provide optical layer re-configurability in the face of network failure or planned maintenance. However, there is concern that the cost of 40 G or 100 G interfaces required to support core router connections is not as cost effective as 10 G and therefore should be minimized throughout the transmission path, i.e. OXCs would require additional 40 G or 100 G interfaces. Furthermore, dedicating 40 G or 100 G modules on an OXC to aggregate flows of data is wasteful of precious backplane and switch capacity.

Referring to FIGS. **3** and **4**, a network **20** illustrates core routers **12***d*,**12***e* using optical 1+1 broadcast with tail-end protection on optical links between adjacent core routers **12***d*,**12***e*. Here, the routers **12***d*,**12***e* are connected through a single optical transceiver on each router **12***d*,**12***e*. In this example, a unidirectional path is shown from the router **12***d* to the router **12***e*. At the router **12***d*, an optical splitter **22** is configured to split an output from a transceiver on the router **12***d* into two identical signals with each signal separately provided to a different WSS **14**. At the router **12***e*, a tail end switch **24** is configured to receive outputs from two different

WSSs **14**. The switch **24** is configured to switch between WSSs **14** responsive to a condition, such as loss of signal.

To date, this kind of protection has been implemented on the short-reach link between core router interfaces and WDM transceivers. This protection scheme is not designed to protect against router **12***d*,**12***e* or router port failure, however it does provide resistance to transport layer failures associated with optical layer components, i.e. the WSSs **14**, and the optical fiber itself.

In FIG. **4**, a failure **26** is illustrated on one link between the routers **12***e* and **12***d*. Upon failure, protection decisions are made locally, providing rapid (e.g., <50 ms) restoration times and significantly reducing the amount of complex routing table re-configuration at layer three. In this protection scheme, the router **12***d* is broadcasting the same data signal to the router **12***e* over two separate paths through WSSs **14**. The splitter **22** is unaffected by the failure **26**, however the switch **24** is configured to switch to the backup or protect path upon the failure **26**. Also, it is now possible to separate maintenance activities associated with different IP and optical operations teams by moving the physical path of the optical signal can be from the 'primary' to 'backup' route.

However, because of the static nature of the optical connectivity, it is not possible to reconfigure the optical layer so as to restore diverse links between the end nodes. Instead, after the link failure **26**, the connection between the routers **12***d* and **12***e* is now unprotected for as long as the damaged link is under repair. For some carriers this is a significant issue. Depending on the physical route of an optical fiber, the MTTR for the damaged connection can be quite long (on the order of days to weeks). For example, some fibers are routed through inhospitable terrain such as over (or through) mountains or under lakes or seas where the maintenance activity can involve lengthy procedures. In this case, the carrier would like to re-establish a new 'backup' route quickly so as to restore diversity between end nodes and thus maintain the promise of high availability to end user clients.

Referring to FIGS. **5** and **6**, many carriers are now deploying Wavelength Selective Switch (WSS) **14** technology into their networks to form a Reconfigurable Optical Add-Drop Multiplexer (ROADM) **30** node. The WSS **14** (and ROADM **30**)) provide all-optical wavelength cross-connection functionality that supports lightpath reconfigurability at the photonic level. The ability to redirect lightpaths from one fiber direction to another direction makes the WSS **14** a promising component of a solution to re-establish a backup connections.

In FIG. **5**, the ROADM **30** illustrates lightpath reconfigurability for lightpaths **32** between different WSSs **14**. Note, in this configuration, the WSSs **14** may not require connections to transceivers or regenerators, but rather may include amplifiers, DCMs, multiplexers, etc. for all-optical pass-through at the ROADM **30**. Here, the lightpaths **32** can be redirected from one output to any of the WSSs **14** (provided there is no wavelength conflict).

In FIG. **6**, an IP router **12** and Optical Transport Network (OTN) platform **34** are connected to different WSSs **14**. The OTN platform **34** is illustrated as an example, and could also include a SONET/SDH platform, an Ethernet platform, etc. Here, the add/drop traffic from the lightpaths **32** is directly associated with a specific direction (denoted by arrows **36**). A shortcoming of ROADM **30** solutions as designed and implemented today is the fact that WDM add/drop traffic is typically associated per direction (or fiber degree) of the ROADM **30** node. The optical interface of the router **12**, switch, platform **34**, or the like wishing to communicate 'north' (i.e., in the direction of arrows **36**) from a node must be hard-wired to the WSSs **14** associated with that direction. Therefore, while the pass-through traffic of today's ROADM **30** is highly flexible, the static connectivity of the add/drop traffic limits the flexibility of the end-to-end solution.

Referring to FIG. **7**, ROADM **30** nodes are added at intermediate junction nodes to the network **20** of FIGS. **3** and **4** illustrating core routers **12***d*, **12***e* using optical 1+1 broadcast with tail-end protection on optical links between adjacent core routers **12***d*,**12***e*. Adding the ROADM **30** to the core router **12***d*,**12***e* interconnection example provides optical pass through at intermediate ROADM **30** nodes without the need for manual patching or terminal regeneration. However, because the add/drop function is dedicated on a per-direction basis, the solution with ROADM **30** is no more capable of re-establishing a second backup connection as the static network above.

Referring to FIG. **8**, a conventional ROADM **40** illustrates the limitations associated with current directional architectures. The conventional ROADM **40** shows only drop-side connections for illustration purposes, and those of ordinary skill in the art will recognize that the ROADM **40** can also include add-side connections. Connections **42** from receivers **44** are hard wired in the conventional ROADM **40** and the intermediate ROADM **30** nodes in FIG. **7**. A receiver's **44** wavelength is fixed by a channel demultiplexer **46** to a single value. Once plugged in, a transmitter cannot change wavelength. As network grows, there may be lots of stranded ports, and wavelengths cannot be dynamically re-optimized to reduce blocking probability. Further, connections to the receivers **44** cannot be automatically altered due to the hard-wire connections **42** preventing rerouting to restore route diversity during failures.

Accordingly, the downtime associated with any network service (e.g., Ethernet, SONET/SDH, Fibre Channel, etc.) is directly associated with the quality of a network service and the associated Service Level Agreement (SLA) between a service provider (i.e., carrier) and a client. In addition to the conventional optical protection schemes described above, network elements (NEs) with protection schemes such as SONET Bi-directional Line Switched Ring/Unidirectional Path Switched Ring (BLSR/UPSR), SDH Multiplex Section-Shared Protection Ring/Sub-network Connection Protection (MSSPRing/SNCP), etc. have been developed as network 'self-healing' mechanisms.

More recently, mesh restoration has been implemented in networks to improve service availability by providing access to multiple backup paths. The ability to access more than one backup path through the network increases the probability that service will stay available to the end user, thus decreasing the average downtime a network experiences over the course of a year.

One of the major challenges facing a number of network operators today is a high incidence of fiber cuts occurring randomly in the network. Such failures are a common occurrence in developing nations such as India where significant new infrastructure building is taking place (resulting in lots of digging up of fiber cables). Because most of these carriers are currently using ring protection methods to protect service, their networks are only able to accommodate one fiber failure on a single ring at any one time. High fiber failure probability therefore leads to the isolation of network elements when two cuts occur simultaneously on the same ring and therefore results in a degradation of end-to end service.

To overcome this challenge, some carriers can geographically partition their existing SONET/SDH ring networks into small cascaded rings such that the probability of two fiber failures occurring on the same ring is reduced. This helps increase service availability but, in many cases, does not

allow the carriers to meet their target availability objective (particularly for high value e.g. banking clients who demand 'always on' service). They are also now investigating the use of mesh restoration to increase their service availability.

A challenge with both ring protection and mesh restoration is the fact that fiber failures are statistically dependent upon the distance between the switching nodes in the network. So, even if mesh restoration is used, if the distance between mesh restoration switch sites is too long, then there still exists an increased probability that a service node can be isolated due to simultaneous failures on each of the (multiple) links connected to that node . . . thus losing service.

One approach used to increase resiliency performance and availability is to combine SDH or SONET ring protection with SONET or SDH mesh restoration. This capability can be combined through a Virtual Line Switched Ring (VLSR) or SNCP protection plus backup mesh restoration on an Optical switch platform. This clearly provides the benefit of a deterministic 50 ms protection time plus mesh restoration availability.

However, this typically needs to be implemented by a single SDH or SONET vendor. Unfortunately, while perhaps possible, the interaction of SDH/SONET between different vendor's equipment for ring protection is highly complicated and not advised. For a number of reasons including Data Communication Channel (DCC) transparency, different use of (and response to) SONET/SDH overhead bytes, etc. very little success has been achieved in the industry in the area of SONET/SDH inter-working between different vendors. Consequently, it does not make engineering or operational sense to operate SDH/SONET rings between mesh restoration nodes belonging to one vendor and SDH/SONET rings belonging to a second vendor. This has been shown to be operationally challenging to engineer.

Also, in some network designs, it may not be cost effective (or prudent from a traffic management perspective) to put a large cross-connect with mesh restoration capabilities at every node in the network. The use of a limited number of cross-connects plus lower cost equipment in between may provide a more economic solution.

BRIEF SUMMARY OF THE INVENTION

In various exemplary embodiments, the present invention provides a directionless (i.e., a direction-independent) optical architecture for reconfigurable optical add/drop multiplexers (ROADMs) and wavelength selective switches (WSSs). The directionless architecture utilizes a wavelength switch coupled between client devices and ROADMs/WSSs to eliminate the need to hard-wire client devices to a wavelength division multiplexed (WDM) network. Accordingly, client device connections can be automatically routed without manual intervention to provide a highly resilient network design which can recover route diversity during failure scenarios. Additionally, the present invention minimizes deployments of costly optical transceivers while providing superior resiliency. Further, the present invention couples the directionless optical architecture and associated optical protection mechanisms with existing mesh restoration schemes to provide additional resiliency. Here, the present invention provides mesh restoration, such as through SONET/SDH, across a G.709/OTN enabled sequence of rings. The G.709 rings provide high availability connectivity for the SONET/SDH connections.

In an exemplary embodiment of the present invention, a directionless optical system includes a client device; a reconfigurable optical node including one or more degrees; and a switch connected to each of the one or more degrees; wherein the client device connects to the switch, and wherein the switch is configured to route signals between the client device and the one or more degrees. Optionally, the directionless optical system further includes a splitter including an input port connected to a transmitter on the client device and dual output ports connected to the switch, wherein the splitter is configured to receive an input from the transmitter on the input port and provide duplicate signals of the input from the transmitter on the dual output ports; and a tail-end switch including dual input ports connected to the switch and an output port connected to a receiver on the client device, wherein the tail-end switch is configured to receive duplicate input signals from the switch on the dual input ports and provide one of the duplicate input signals to the receiver. The switch includes a first switch module and a second switch module for redundancy, and wherein each of the dual output ports and dual input ports connect separately to the first switch module and the second switch module. The one or more degrees can includes two or more degrees; wherein the first switch module and the second switch module are configured to connect the duplicate signals on the dual output ports to separate degrees of the two or more degrees; and wherein the first switch module and the second switch module are configured to connect the duplicate input signals on the dual input ports to separate degrees of the two or more degrees. The two or more degrees can also include an additional degree not utilized by the dual output ports and the dual input ports; and wherein, responsive to a failure on one of the separate degrees, the first switch module and the second switch module are configured to redirect one of the dual output ports and one of the dual input from the one of the separate degrees to the additional degree to provide route diversity.

Alternatively, the directionless optical system further includes a first transceiver and a second transceiver on the client device, wherein the first transceiver and the second transceiver are connected to the switch; wherein the one or more degrees includes two or more degrees; and wherein the switch is configured to connect the first transceiver and the second transceiver to separate degrees of the two or more degrees. The switch can include a first switch module and a second switch module for redundancy, and wherein the first transceiver is connect to the first switch module and the second switch module is connected to the second switch module. The two or more degrees can also include an additional degree not utilized by the first transceiver and the second transceiver; and wherein, responsive to a failure on one of the separate degrees, the first switch module and the second switch module are configured to redirect one of the first transceiver and the second transceiver from the one of the separate degrees to the additional degree to provide route diversity. Optionally, the client device includes a router, and wherein the first transceiver and the second transceiver utilize layer three protection mechanisms. The reconfigurable optical node can include a wavelength selective switch for each of the one or more degrees; and a multi-channel fixed filter including one of a band-wide and cyclic Arrayed Waveguide connected to the wavelength selective switch and the switch.

Optionally, the directionless optical system further includes a regenerator/wavelength converter connected to the switch; wherein the switch is configured to connect a signal from the one or more degrees to the regenerator/wavelength converter. The one or more degrees can include two or more degrees, and wherein the reconfigurable optical node includes a first wavelength selective switch connected to a first set of one or more demultiplexers and to a first set of one or more

multiplexers; and a second wavelength selective switch connected to a second set of one or more demultiplexers and to a second set of one or more multiplexers; wherein each of the first set of one or more demultiplexers, the first set of one or more multiplexers, the second set of one or more demultiplexers, and the second set of one or more multiplexers include a connection to the switch. The switch can include two or more optical switches, and wherein the first set of one or more demultiplexers, the first set of one or more multiplexers, the second set of one or more demultiplexers, and the second set of one or more multiplexers are each wavelength independent. Alternatively, the directionless optical system further includes a wavelength division multiplex platform including a transponder, the splitter, and the tail-end switch, wherein the transponder connects to the client device; wherein the client device includes mesh restoration with a hold-off timer configured to allow the splitter and the tail-end switch to restore service prior to initiated mesh restoration.

In another exemplary embodiment of the present invention, a highly available directionless optical method includes providing a first path and a second path through a network between a first device and a second device, wherein the first device and the second device are each dynamically connected to the first path and the second path; upon a failure on the first path, restoring service between the first device and the second device on the second path; and reconfiguring the first path to a third path by dynamically changing a connection from the first path on each of the first device and the second device to the third path. Each of the first path and the second path includes an optical network; wherein dynamically connected includes a directionless optical switch between each of the first path and the second path and each of the first device and the second device. The highly available directionless optical method further includes performing mesh restoration at each of the first device and the second device following a hold-off time period, wherein the hold-off time period is configured to enable service restoration optically between the first device and the second device.

In yet another exemplary embodiment of the present invention, a highly available directionless optical network includes a first device including an optical connection to a first optical switch; a first optical platform connected to the first optical switch, wherein the first optical platform includes multiple degrees; a second device including an optical connection to a second optical switch; a second optical platform connected to the second optical switch, wherein the second optical platform includes multiple degrees; and a plurality of interconnected reconfigurable optical nodes between the first optical platform and the second optical platform; wherein the first optical switch and the second optical switch connect the first optical platform to the second optical platform through a first path and a second path; wherein the first path utilizes a first degree of the multiple degrees on the first optical platform and a first degree of the multiple degrees on the second optical platform; wherein the second path utilizes a second degree of the multiple degrees on the first optical platform and a second degree of the multiple degrees on the second optical platform; and wherein the first optical switch is configured to switch connections from one of the first path and the second path to a third degree of the multiple degrees on the first optical platform and a third degree of the multiple degrees on the second optical platform. Optionally, the plurality of interconnected reconfigurable optical nodes are configured in a cascaded protection ring configuration between the first optical platform and the second optical platform; and wherein the first optical platform and the second optical platform are configured to provide optical 1+1 protection. The first device and the second device can include mesh restoration with a hold-off timer operable to delay mesh restoration for a time period allowing the optical 1+1 protection to reestablish service. The highly available directionless optical network can further include one or more regenerators at one or more of the plurality of interconnected reconfigurable optical nodes; wherein each of the one or more of the plurality of interconnected reconfigurable optical nodes include an optical switch connected between the one or more regenerators and the one or more of the plurality of interconnected reconfigurable optical nodes.

In yet another exemplary embodiment of the present invention, a directionless reconfigurable optical add/drop node includes a wavelength selective switch connected to a multi-channel fixed filter, wherein the multi-channel fixed filter includes one of a band-wide and cyclic Arrayed Waveguide; an optical switch connected to the multi-channel fixed filter; and a client device connected to the optical switch; wherein the wavelength selective switch is configured to provide single channel selectivity across a plurality of wavelengths; wherein the multi-channel fixed filter receives one of the plurality of wavelengths within a multi-channel range of the multi-channel fixed filter; and wherein the optical switch routes one of the plurality of wavelengths to the client device.

BRIEF DESCRIPTION OF THE DRAWINGS

The present invention is illustrated and described herein with reference to the various drawings, in which like reference numbers denote like method steps and/or system components, respectively, and in which:

FIGS. **1** and **2** are diagrams of a network of core routers with mesh connections directly over a statically provisioned wavelength division multiplexed (WDM) transport layer;

FIGS. **3** and **4** are diagrams of a network of core routers using optical 1+1 broadcast with tail-end protection on optical links between adjacent core routers;

FIGS. **5** and **6** are diagrams of conventional Reconfigurable Optical Add-Drop Multiplexer (ROADM) with Wavelength Selective Switch (WSS) technology;

FIG. **7** is a diagram of the network in FIGS. **3** and **4** with conventional ROADM nodes are added at intermediate junction nodes;

FIG. **8** is a diagram of a conventional ROADM illustrating the limitations associated with current directional architectures;

FIG. **9** is a diagram of a directionless architecture with a directionless wavelength switch located between client devices and a ROADM according to an exemplary embodiment of the present invention;

FIGS. **10** and **11** are diagrams of a directionless architecture with a directionless wavelength switch located between a router and a ROADM to provide optical 1+1 protection from the router according to an exemplary embodiment of the present invention;

FIG. **12** is a diagram of directionless architectures for ROADMs with redundant directionless switches for multiple degrees according to an exemplary embodiment of the present invention;

FIGS. **13-16** are diagrams of a network connecting two IP routers with single ports and optical layer protection through ROADMs configured with a directionless architecture according to an exemplary embodiment of the present invention;

FIGS. **17-20** are diagrams of a network connecting two IP routers with dual ports through ROADMs configured with a directionless architecture according to an exemplary embodiment of the present invention;

FIGS. **21-24** are diagrams of a network connecting three IP routers with dual ports through ROADMs configured with a directionless architecture according to an exemplary embodiment of the present invention;

FIGS. **25-29** are diagrams of a high availability router interconnect with two routers interconnected over an optical network utilizing a directionless architecture according to an exemplary embodiment of the present invention;

FIGS. **30-34** are diagrams of a high availability router interconnect with two routers interconnected with dual ports over an optical network utilizing a directionless architecture according to an exemplary embodiment of the present invention;

FIGS. **35-37** are diagrams of a degree four ROADM node with redundant directionless switches for a directionless architecture according to an exemplary embodiment of the present invention;

FIG. **38** is a diagram of a directionless ROADM node with a single large switch according to an exemplary embodiment of the present invention;

FIG. **39** is a diagram of a ROADM configuration with multi-λ fixed filters according to an exemplary embodiment of the present invention;

FIG. **40** is a diagram of a directionless ROADM node with one or more small scale switches and multi-λ fixed filters according to an exemplary embodiment of the present invention;

FIG. **41** is a diagram of a network illustrating connections between two offices utilizing a combination of mesh restoration and optical ring restoration according to exemplary embodiment of the present invention;

FIG. **42** is a diagram of the network from FIG. **41** with two simultaneous fiber failures according to an exemplary embodiment of the present invention; and

FIGS. **43-45** are diagrams of a network illustrating a large-scale deployment of cross-connects with cascaded protection rings according to an exemplary embodiment of the present invention.

DETAILED DESCRIPTION OF THE INVENTION

In various exemplary embodiments, the present invention provides a directionless optical architecture for reconfigurable optical add/drop multiplexers (ROADMs) and wavelength selective switches (WSSs). The directionless architecture utilizes a directionless wavelength switch coupled between client devices and ROADMs/WSSs to eliminate the need to hard-wire client devices to a wavelength division multiplexed (WDM) network. Accordingly, client device connections can be automatically routed without manual intervention to provide a highly resilient network design which can recover route diversity during failure scenarios. Additionally, the present invention minimizes deployments of costly optical transceivers while providing superior resiliency. Further, the present invention couples the directionless optical architecture and associated optical protection mechanisms with existing mesh restoration schemes to provide additional resiliency. Here, the present invention provides mesh restoration, such as through SONET/SDH, across a G.709/OTN enabled sequence of rings. The G.709 rings provide high availability connectivity for the SONET/SDH connections.

Advantageously, the present invention can provide connections with high availability between switch or router ports. The present invention can also be utilized with SONET/SDH/Optical Transport Network (OTN) terminals and the like. As data rates increase to 40 Gbps, 100 Gbps, and the like, the present invention provides the potential for lower cost protection than electronic switching equipment. However, the present invention maintains carrier-grade protection requirements to offer superior resiliency.

Referring to FIG. **9**, a directionless architecture **50** is illustrated with a directionless wavelength switch **52** located between client devices, such as an IP router **12** and an OTN platform **34**, and a ROADM **30** according to an exemplary embodiment of the present invention. As described herein, directionless refers to a direction independent architecture where connected ports can be routed to any device or degree through the directionless wavelength switch **52**. Advantageously, the directionless wavelength switch **52** effectively removes the hard-wired connection from the devices **12**,**34** to the ROADM **30** enabling network flexibility in the ROADM **30**. In FIG. **9**, each of the IP router **12** and OTN platform **34** can select any direction in the ROADM **30** using the wavelength switch **52** to reroute an input/output to/from a different WSS **14**.

Connections from the IP router **12** and OTN platform **34** are to the switch **52**, i.e. not hard-wired to WSSs **14**. The switch **52** provides connections to each WSS **14** in the ROADM **30**. Based on the switch **52** configuration, the IP router **12** and OTN platform **34** can have their signals routed in different directions through the ROADM **30** without manual patching of connections.

For example, both the IP router **12** and OTN platform **34** include dual inputs/outputs to the directionless wavelength switch **52** for 1+1/1:1 or the like protection. A failure in the path or on the equipment causes the dual inputs/outputs to switch. The switch **52** can be utilized to switch the failed port to another WSS **14** to provide another route in the network ensuring resiliency during a failure.

The directionless wavelength switch **52** can include a Micro Electro-Mechanical Systems (MEMS), a liquid crystal, an inkjet, a thermal mechanism, a non-linear mechanism, an acousto-optic mechanism, and the like for the physical embodiment. As described herein, the wavelength switch **52** can be scaled to variable port sizes (i.e., depending on application size), and can also include redundancy through multiple physical devices to ensure resiliency. Generally, the directionless wavelength switch **52** is configured to receive an input including one or more wavelengths, and to switch the input to an output port based on provisioning. The directionless wavelength switch **52** can switch at a wavelength level or at a multiplexed wavelength level (i.e., groups of wavelengths). Advantageously, the scaling requirements of the directionless wavelength switch **52** are less than those required for prior art designs that require larger port counts.

Referring to FIG. **10**, a directionless architecture **50** is illustrated with a directionless wavelength switch **52** located between an IP router **12** and a ROADM **30** to provide optical 1+1 protection from the IP router **12** according to an exemplary embodiment of the present invention. Here, the router **12** utilizes a single input/output to connect to the switch **52**, and the switch **52** can be configured to provide 1:1 optical protection by switching the single input between two diverse paths through the ROADM **30** providing a working **54** and protection **56** path.

Referring to FIG. **11**, a directionless architecture **50** is illustrated with a directionless wavelength switch **52** located between one or more optical regenerators **58** and a ROADM

30 to provide optical regeneration of lightpaths 60 as needed according to an exemplary embodiment of the present invention. The directionless architecture 50 enables any lightpath 60 from client to client to be routed through any arbitrary path through the network. The one or more optical regenerators 58 can be used as needed based on the lightpath 60 routing for optical regeneration or for wavelength conversion (if there is wavelength blocking on a path) based on low optical signal-to-noise ratio (OSNR) or the like. This function will become increasingly of interest as data rates increase and non-regenerated optical transmission distances drop accordingly. Providing access to the dedicated bank of regenerators 58 that are part of the transmission function and not an integral part of a sub-wavelength switch or router will be both efficient and cost effective. Additionally, the bank of regenerators 58 can include wavelength conversion to switch a channel from one wavelength to another. For example, this can include tunable lasers of the regenerators 58.

Referring to FIG. 12, directionless architectures for a ROADMs 62,64,66 are illustrated with redundant directionless switches 52 for multiple degrees according to an exemplary embodiment of the present invention. For carrier-grade availability reasons, the present invention can use a redundant pair of directionless wavelength switches 52 at each ROADM 62,64,66 location. Each individual directionless switch 52 connects to each WSS 14 associated with each ROADM direction. For example, the WSS 14 can connect to a WDM multiplexer/demultiplexer which is connected to the directionless switch 52. Thus, for a degree-2 ROADM 62, each directionless switch 52 connects to two directions on the WSSs 14. For a degree-3 ROADM 64, each directionless switch 52 connects to three directions on the WSSs 14. For a degree-4 ROADM 66, each directionless switch 52 connects to four directions on the WSSs 14. Note, the present invention can be utilized with any arbitrary number of degrees.

Referring to FIGS. 13-16, a network 70 includes two IP routers 12*d*,12*e* connected through ROADMs 62 64,66 configured with a directionless architecture according to an exemplary embodiment of the present invention. The network 70 is similar to the network 20 in FIGS. 3-4 and 7, but includes the directionless architecture of the present invention with redundant directionless switches 52 at each ROADM 62,64, 66 site.

In this example, the routers 12*d*,12*e* are connected through a single optical transceiver on each router 12*d*,12*e*. For illustration purposes, a unidirectional path is shown from the router 12*d* to the router 12*e*. At the router 12*d*, an optical splitter 22 is configured to split an output from a transceiver on the router 12*d* into two identical signals with each signal separately provided to redundant switches 52 at a ROADM 64 node. The redundant switches are connected to each of three WSS 14 at the ROADM 64 node. At the router 12*e*, a tail end switch 24 is configured to receive outputs from redundant switches 52 connected to three different WSSs 14 at a ROADM 64 node. The switch 24 is configured to switch between the redundant switches 52 responsive to a condition, such as loss of signal.

Advantageously, introducing the directionless wavelength switch 52 functionality on top of a WSS layer provides the opportunity to achieve high availability connectivity as is illustrated in the network 70 through an exemplary fault condition 72 in FIGS. 14-16. As illustrated in this example with the splitter 22 and tail end switch 24 for layer one optical tail-end protection, connecting over a WSS layer is a flexible extension to what some carriers are already doing today over static WDM links. Each path of a 1+1 broadcasted router signal is switched through each of the redundant directionless wavelength switches 52 and forwarded to separate directions out of the ROADM node 64.

Note that, in this case, the expensive WDM interface associated with the very high speed router connections is integrated into the core router 12*d*,12*e* device and that no other costly very high speed interfaces exist in the path. For example, the core router 12*d*,12*e* can include WDM interfaces, and the core router 12*d*,12*e* can alternatively include short-reach interconnects to a WDM transceiver. Again, upon link failure, rapid 'tail-end' protection switching (with the switch 24) provides fast optical layer protection without the need for router 12*e* reconfiguration. Additionally, the network 70 can provide an alternative 'third' path in the network, the directionless switch 52 associated with the now failed link can reconfigure to create a new backup path.

In FIG. 14, the network 70 is illustrated after the fault condition 72 is experience on a working route 74. Accordingly, the tail end switch 24 is configured to switch to a protect route 76 to receive a protect signal transmitted by the splitter 22 on a diverse path. Here, the working path 74 is now down, and the network 70 is running unprotected only on the protect route 76.

In FIG. 15, the network 70 is illustrated with a third alternative route 78 between the routers 12*d*,12*e*. Accordingly, the network 70 can now provide connection diversity between the routers 12*d*,12*e* even though the original working route 74 is down. Here, the directionless wavelength switch 52 can be configured to route the lines from the working route 74 to the third alternative route 78. This is done automatically at the switches 52 without the need for manual patching of connections since there is no hard-wired connection from the routers 12*d*,12*e* to the WSSs 14. Further, because the new path 78 re-forms the 1+1 broadcast connection between the head-end splitter 22 and tail-end protection switch 24, rapid optical protection capability is regained. Thus, upon a second failure, a sub-50 ms protection switch is guaranteed.

In FIG. 16, the network 70 is illustrated with regenerators 58 at a WSS 64 node on the third alternative route 78. This illustrates the functionality depicted in FIG. 11. Here, on the third alternative route 78, a ROADM node 64 is configured to route the third alternative route 78 to a regenerator 58. Regeneration may be required on a long optical link, or wavelength conversion if the wavelength on route 78 is being used on a particular span. At a ROADM node 64, the directionless wavelength switch 58 provides flexible access to a pool of optical regenerators 58 when necessary. Note, the regenerators 58 may include tunable wavelength transmitters allowing any wavelength to be utilized. Tunable wavelength transmitters are configured to set a center wavelength of a transmitted signal to any particular value within a set range.

Referring to FIGS. 17-20, a network 80 includes two IP routers 12*a*,12*b* configured through ROADMs 62,64,66 configured with a directionless architecture according to an exemplary embodiment of the present invention. The network 80 includes the directionless architecture of the present invention with redundant directionless switches 52 at each ROADM 62,64,66 site.

Not all carriers choose to implement optical layer protection between adjacent core router ports, such as in FIGS. 13-16. As described earlier, when failures occur, the IP layer reorganizes IP flows using techniques such as IP/MPLS (Multi-Protocol Label Switching) Fast Re-route. FIGS. 17-20 show the same core router connectivity as described earlier for the static WDM scenario but with a flexible WSS photonic

layer. However, as in the previous example, expensive WDM interfaces may be integrated into the core routers to reduce transmission costs.

In FIG. **17**, each router **12***a*,**12***b* includes two optical transceivers connected to the redundant directionless switches **52**. At the router **12***a*,**12***b*, the optical transceivers can be configured to each provide working traffic with a fill rate of around 50%. The unused capacity can be used for layer three rerouting between the routers **12***a*,**12***b* if a link **82**,**84** is down. In FIG. **18**, the network **80** is illustrated after a fault condition **86** is experience on the link **82**. Accordingly, each router **12***a*,**12***b* is configured to utilize layer three mechanisms to reroute the 50% fill traffic from link **82** onto link **84**. Here, the link **82** is now down, and the network **80** is running unprotected with 100% fill on the link **84**.

In FIG. **19**, the network **80** is illustrated with a third link **88** between the routers **12***a*,**12***b*. Accordingly, the network **80** can now provide connection diversity between the routers **12***a*,**12***b* even though the first link **82** is down. Here, the directionless wavelength switch **52** can be configured to route the lines from the link **82** to the third link **88**. This is done automatically at the switches **52** without the need for manual patching of connections since there is no hard-wired connection from the routers **12***a*,**12***b* to the WSSs **14**. The link **88** can now be provisioned as a working link and approximately 50% of the traffic from link **84** can be moved to link **88** providing excess capacity on a diverse link for protection.

In FIG. **20**, the network **80** is illustrated with regenerators **58** at a WSS **64** node on the third link **88**. This illustrates the functionality depicted in FIG. **11**. Here, on the third link **88**, a ROADM node **64** is configured to route the third link **88** to a regenerator **58**. Regeneration may be required on a long optical link, or wavelength conversion if the wavelength on link **88** is being used on a particular span. At a WSS node **64**, the directionless wavelength switch **58** provides flexible access to a pool of optical regenerators **58** when necessary. Note, the regenerators **58** may include tunable wavelength transmitters allowing any wavelength to be utilized. Tunable wavelength transmitters are configured to set a center wavelength of a transmitted signal to any particular value within a set range.

Referring to FIGS. **21**-**24**, a network **90** includes three IP routers **12***a*,**12***b*,**12***c* configured through ROADMs **62**, **64**,**66** configured with a directionless architecture according to an exemplary embodiment of the present invention. The network **90** is similar to the network **10** in FIGS. **1**-**2**, but includes the directionless architecture of the present invention with redundant directionless switches **52** at each site **62**,**64**,**66**. As described herein, the network **90** utilizes IP layer protection to reorganize IP flows using techniques such as IP/MPLS Fast Re-route. As such, links **92**,**94** between routers **12***a*,**12***b*,**12***c* are provisioned with approximately 50% fill.

In FIG. **21**, each router **12***a*,**12***b*,**12***c* includes two optical transceivers connected to the redundant directionless switches **52**. The switches **52** are configured to direct signals from the two optical transceivers to different WSSs **14**. At the router **12***a*,**12***b*,**12***c* the optical transceivers can be configured to each provide working traffic with a fill rate of around 50%. The unused capacity can be used for layer three rerouting between the routers **12***a*,**12***b*,**12***c* if a link **92**,**94** is down. In FIG. **22**, the network **90** is illustrated after a fault condition **96** is experience on the link **92**. Accordingly, each router **12***a*,**12***b* is configured to utilize layer three mechanisms to reroute the 50% fill traffic from link **92** onto link **94**. Here, the link **92** is now down, and the network **90** is running unprotected with 100% fill on the link **94**.

In FIG. **23**, the network **90** is illustrated with a third link **98** between the routers **12***a*,**12***b*. Accordingly, the network **90** can now provide connection diversity between the routers **12***a*,**12***b* even though the first link **92** is down. Here, the directionless wavelength switch **52** can be configured to route the lines from the link **92** to the third link **98**. This is done automatically at the switches **52** without the need for manual patching of connections since there is no hard-wired connection from the routers **12***a*,**12***b* to the WSS **14**. The link **98** can now be provisioned as a working link and approximately 50% of the traffic from link **94** can be moved to link **98** providing excess capacity on a diverse link for protection.

In FIG. **24**, the network **80** is illustrated with regenerators **58** at a ROADM **66** node on the third link **98**. This illustrates the functionality depicted in FIG. **11**. Here, on the third link **98**, a ROADM node **66** is configured to route the third link **98** to a regenerator **58**. Regeneration may be required on a long optical link, or wavelength conversion if the wavelength on link **98** is being used on a particular span. At a ROADM node **66**, the directionless wavelength switch **58** provides flexible access to a pool of optical regenerators **58** when necessary. Note, the regenerators **58** may include tunable wavelength transmitters allowing any wavelength to be utilized. Tunable wavelength transmitters are configured to set a center wavelength of a transmitted signal to any particular value within a set range.

Referring to FIGS. **25**-**29**, a high availability router interconnect **100** is illustrated with two routers **12***f*,**12***g* interconnected over an optical network **102** utilizing a directionless architecture according to an exemplary embodiment of the present invention. FIGS. **25**-**29** provide a different schematic view of the same functionality described herein in previous diagrams, focusing at interconnections at each node. The interconnect **100** includes a degree three ROADM node **64** and a degree four ROADM node **66**, such as described in FIG. **12**. Each ROADM node **64**,**66** includes multiple WSSs **14** which can connect to WDM multiplexers, demultiplexers, optical amplifiers, DCMs, and the like. A redundant directionless switch **52** is included before each ROADM node **64**,**66**.

FIG. **25** illustrates an equipment configuration of the interconnect **100**. Each router **12***f*,**12***g* includes a single optical transceiver, such as a 10G, 40G, 100G, or the like transceiver. The single optical transceiver at the router **12***f* is connected to a 1×2 optical splitter **22** which is configured to replicate the signal and provide the signal to two separate switches in the redundant directionless switch **52**. The switch **52** provides the duplicate signals to separate WSSs **14** at the ROADM node **64** for transmission over the optical network **102**.

The ROADM node **66** receives the duplicate signals at separate WSSs **14** after transmission over the optical network **102**. The outputs from the various WSSs **14** are connected to another redundant directionless switch **52** which connects to a 1×2 tail-end switch **24**. The tail-end switch **24** is configured to receiver both duplicate signals and to provide one output to the optical transceiver on the router **12***g*. The tail-end switch **24** is configured to switch between signals based on a predetermined condition, such as loss-of-signal, alarm indication signal, signal degrade, and the like.

FIG. **26** illustrates a work path **104** and a protect path **106** through the optical network **102**. The duplicate signals are sent on each of the paths **104**,**106** based on a 1+1 optical broadcast through the optical splitter **22**. Advantageously, the interconnect **100** minimizes expensive optical transceivers on the routers **12***f*,**12***g* while maintaining a highly available architecture through optical 1+1 protection and route diversity.

FIG. **27** illustrates a rapid protection response of the optical 1+1 protection based on a fault **108** on the working path **104**.

The router **12***f* does not implement any action here since it is sending duplicate signals through the splitter **22**. Instead, at the router **12***g*, the tail-end switch **24** realizes the fault **108** and performs a switch to the protect path **106** restoring connectivity between the routers **12***f*,**12***g*.

FIG. **28** illustrates a reconfiguration to provide a third path **110** to maintain route diversity during the fault **108** on the working path **104**. Here, the switch **52** at the router **12***f* is configured to move the signal from the working path **104** to another WSS **14** on the third path **110**. Also, the switch **52** at the router **12***g* is also configured to move the output from the working path **104** to the third path **110**. Now, the interconnect **100** maintains route diversity despite a failure on the working path **104**.

Advantageously, the optical 1+1 and directionless architecture provide protection and diversity despite faults while minimized transceiver costs. Note, as rates increase to 40 G, 100 G, etc., the optical transceiver costs dominate capital expense. However, the optical 1+1 does not protect against transceiver failures at the routers **12***f*,**12***g*. FIG. **29** illustrates a 1:N protection mechanism **112** for optical transceivers on the routers **12***f*,**12***g*. 1:N means one protection transceiver can provide equipment redundancy for up to N working transceivers. Note, the 1:N protection mechanism **112** for optical transceivers can also be utilized on Ethernet platforms, SONET/SDH platforms, OTN platforms, etc.

At the router **12***f*, each working and protect transceiver is connected to the switch **52** through an optical splitter **22**. In the event a working transceiver fails, the protect transceiver is configured to take over transmitting the working transceiver's signal through the optical splitter **22** and the switch **52** and onto the optical network **102**. Advantageously, the 1:N protection mechanism **112** minimizes transceiver costs by only using one protection transceiver for N working transceivers. For example, the 1:N protection mechanism **112** can be utilized with mesh restoration to provide similar resiliency as provided with ring configurations while providing better efficiency than rings.

Referring to FIGS. **30-34**, a high availability router interconnect **120** is illustrated with two routers **12***h*,**12***i* interconnected with dual ports **122** over an optical network **102** utilizing a directionless architecture according to an exemplary embodiment of the present invention. Each of the routers **12***h*,**12***i* include the dual ports **122** with each port connected to a separate switch in the redundant directionless switch **52**. The switch **52** provides signals from each port to separate WSS **14** at the ROADM node **64** for transmission over the optical network **102**. FIG. **30** illustrates an equipment configuration of the interconnect **120**.

The ports **122** can each be configured to carry working traffic between the routers **12***h*,**12***i*. FIG. **31** illustrates a link sharing on the ports **122**, such as utilizing MPLS Traffic Engineering (MPLS-TE). Here, two paths **124**,**126** each are configured to provide traffic between the routers **12***h*,**12***i* with excess capacity to provide for rerouting in the event of a failure on one of the paths **124**,**126**. Note, this configuration provides both route and transceiver protection.

FIG. **32** illustrates a rapid protection response of the interconnect **120**. Here, the first path **124** has a failure **128** on it. After the failure **128**, all traffic from the path **124** is rerouted to the path **126**. For example, this can be accomplished using MPLS-FRR (fast reroute). Now, the path **126** is utilized up to full capacity leaving no additional route protection in the interconnect **120**. FIG. **33** illustrates a third path **130** for restoring path diversity while the path **124** is down. The third path **130** is configured by rerouting the optical transceiver from the first path **124** using the switch **52** to the third path **130**. FIG. **34** illustrates a 1+1/1:1 protection mechanism **132** on the dual port transceivers **132** according to an alternate embodiment of the present invention. 1+1/1:1 protection **132** provides layer one protection against faults at both the dual port transceivers **122** and on the paths.

Referring to FIGS. **35-37**, a degree four ROADM node **66** is illustrated with redundant directionless switches **52** for a directionless architecture according to an exemplary embodiment of the present invention. The ROADM node **66** is illustrated with the optical 1+1 protection scheme formed with a splitter **22** and a tail-end switch **24**. An optical transceiver **140** is connected to the splitter **22** on a transmitter and to the tail-end switch **24** on the receiver. Note, the optical transceiver **140** can be in a router, switch, optical cross-connect, WDM transponder, and the like, i.e. although the present invention has been illustrated herein with regard to an IP router, those of ordinary skill in the art will recognize that the present invention can equally apply to any device utilizing an optical transceiver and the like.

The ROADM node **66** includes two redundant directionless switches **52** each includes two optical switches **142**. The separate optical switches **52** provide redundancy at the ROADM node **66**, i.e. a failure of one optical switch **52** is not a single point of failure. Each of the optical switches **142** are separated for receive and transmit sides (denoted as **142***a* for receive and **142***b* for transmit) of the transceiver **140**. The receive side switches **142***a* receive inputs from demultiplexers **144**. The demultiplexers **144** receive outputs from four WSS **146** devices. The WSSs **146** receive inputs external to the node **66** from optical fibers. As described herein, the WSSs **146** are configured to dynamically route one or more wavelengths to each demultiplexer. The receive side switches **142***a* each provide an output to the tail-end switch **24**.

The transmit side switches **142***b* each receive an output from the splitter **22**, and connect to multiple multiplexers **148** which are configured to multiplex one or more outputs from the switches **142***b*. Outputs from the multiplexers **148** can be combined with pass-through signals **150** from the WSSs **146** for output from the node **66**. For example, the multiplexer **148** outputs and pass-through signals **150** can be combined with a multiplexer **152**. Additionally, those of ordinary skill in the art will recognize that this degree four configuration can also be extended to different degree configurations as are known in the art.

FIG. **36** illustrates an exemplary path through the ROADM node **66** for dual transmit/receive signals **160**,**162**. In this configuration, the four inputs/outputs from the ROADM node **66** are labeled as East, West, North, and South. The transceiver **140** transmits a signal to the splitter **22** which provides a dual transmit signal **160** to each of the transmit switches **142***b*. The first transmit switch **142***b* sends one of the dual transmit signals **160** in the North direction, and the second transmit switch **142***b* sends the other of the dual transmit signals **160** in the East direction. The WSSs **146** for North and East directions receive dual receive signals **162** and provide each to one of the receive switches **142***a*. Each of the receive switches **142***a* connect the dual receive signal **162** to the tail-end switch **24**.

FIG. **37** illustrates an alternative configuration of the ROADM node **66** with one of the redundant directionless switches **52** configured as a combination of multiple small-scale switches **164**. Advantageously, the small-scale switches **164** minimize capital expense allowing a configuration which fits the actual deployment size of the ROADM node **66**, and enables the ROADM node **66** to scale as bandwidth is required.

Referring to FIG. **38**, a directionless ROADM node **180** is illustrated with a single large switch **182** according to an exemplary embodiment of the present invention. The ROADM node **180** only shows a drop side for illustration purposes, and those of ordinary skill in the art will recognize that the ROADM node **180** can include an add side with similar components. The ROADM node **180** is of degree two with an East and North direction **184**,**186**. Each direction **184**,**186** includes a WSS **146** which receives an input **188** and provides an express output **190**. The input **188** is received from a node external to the node **180**, such as over optical fiber, and the output **190** transmits from the node **180** to another node.

The WSS **146** is configured to reconfigurably drop different wavelengths from the input **188** to a channel demultiplexer **192**. The demultiplexer **192** is configured to separate one or more channels. In this exemplary embodiment, outputs from the various demultiplexers **192** are connected to the switch **182**. The switch **182** provides a directionless architecture similar to the switch **52** described herein. The switch **182** can route outputs from any of the demulitplexers **192** to any receiver **194**. This avoids the need to hard-wire receivers **194** to the demultiplexers **192** allowing path changes as described herein. Note, the switch **182** requires full capacity up from for all receiver **194** connections. This could require a lot of demultiplexers **192** and significant wiring upon initial deployment.

Referring to FIG. **39**, a ROADM configuration **200** is illustrated with multi-λ fixed filters **202** according to an exemplary embodiment of the present invention. The ROADM configuration **200** is similar to FIG. **38**, but uses the multi-λ fixed filters **202** instead of the single λ demulitplexers **192**. For example, the multi-λ fixed filters **202** can include band splitter or cyclic arrayed waveguide gratings (AWG). This configuration provides fewer unused ports as the network grows since each port of the filters **202** can provide multiple wavelengths. For example, each filter **202** can provide a 4-channel passband on each of 10 ports to provide a total capability of 40-channels for each filter **202**. The configuration **200** can leverage wavelength tunablity on optical transceivers to re-optimize a network and reduce wavelength blocking probability.

Advantageously, the multi-channel (either band-wide or cyclic AWG) fixed filters under the WSS layer provide the WSS **146** single channel selectivity. The ROADM configuration **200** still preserves some channel wavelength tunability, but with the cost of fixed filters. The ROADM configuration **200** also allows a more scalable growth in the switch size that gets used in the directionless architecture. The ROADM configuration **200** provides a balance between tunability and cost. Tunability is available within the ranges of the filters **202** allowing wavelength assignments to be dynamically changed to re-optimize a network and reduce wavelength blocking probability.

Referring to FIG. **40**, a directionless ROADM node **220** is illustrated with one or more small scale switches **222** and multi-λ fixed filters **202** according to an exemplary embodiment of the present invention. The ROADM node **220** only shows a drop side for illustration purposes, and those of ordinary skill in the art will recognize that the ROADM node **220** can include an add side with similar components. The ROADM node **220** is of degree two with an East and North direction **224**,**226**. Each direction **224**,**226** includes a WSS **146** which receives an input **188** and provides an express output **190**. The input **188** is received from a node external to the node **180**, such as over optical fiber, and the output **190** transmits from the node **180** to another node.

In this exemplary embodiment, receivers **194***a*,**194***b* can be either directional or directionless. For example, receiver **194***a* can be initially connected directly to the filter **202** for a directional configuration. However, the node **220** can evolve to a directionless configuration through the addition of the switch **220** and connecting the receiver **194***b* directly to the switch **222** instead of the filter **202**. Additionally, extra switches **222** can be added to provide efficient growth and added redundancy.

Referring to FIG. **41**, a network **300** illustrates connections between two offices **302**,**304** utilizing a combination of mesh restoration and optical ring restoration according to an exemplary embodiment of the present invention. Each office **302**, **304** includes a cross-connect **306** and a DWDM (dense-WDM) platform **308**. The cross-connect **306** can include an optical switch or multi-service platform configured to provide SONET/SDH/OTN switching, and the DWDM platform **308** is configured to transmit/receive multiple wavelengths over an optical network **310**. Alternatively, the cross-connect **306** can also be an IP router, Ethernet switch, or the like.

The cross-connects **306** are configured to provide mesh restoration, such as using ITU-T Automatically Switched Optical Network (ASON), IETF Generalized Multi-Protocol Label Switching (G-MPLS) also known as Automatic Switched Transport Network (ASTN), or the like. The DWDM platforms **308** are configured to provide optical 1+1 protection such as described herein with the splitter **22** and tail-end switch **24**.

Advantageously, the present invention combines the use of mesh restoration and optical ring protection (i.e., not SONET/SDH) to achieve super high availability performance. The optical ring protection can utilized G.709/OTN to encapsulate SONET/SDH signals while maintaining the mesh restoration on the underlying SONET/SDH signals. Additionally, G.709/OTN provides a header with operations, administration, maintenance, and provisioning (OAM&P) capabilities on the optical ring, such as determining fault conditions. The G.709/OTN optical rings provide high availability connectivity for the mesh SONET/SDH connections.

The cross-connect nodes **306** that participate in mesh restoration are connected together using cascaded protection rings **312**,**314** based on the DWDM platform **308**. The use of cascaded protection rings **312**,**314** provides protection against a single fiber failure within the context of a small geographical domain. Thus, multiple fiber failures may exist simultaneously (on different rings **312**,**314**) between a pair of mesh restoration nodes without the need to implement mesh restoration.

The present invention utilizes a protected transparent ring solution between mesh restoration nodes, such as cross-connects **306**. These transparent rings **312**,**314** can include simple optical 1+1/tail-end protection of optical signals over fiber or WDM or, if a managed solution is preferred, then the rings can be defined using OTN/G.709 framing. For example, DWDM platforms **308** can be configured to frame incoming signals from the cross-connect **306** using G.709. This provides complete transparency while providing OAM&P at the DWDM layer. The G.709 framing can be utilized to indicate a protection switch at the DWDM layer.

In this scenario, the connection between a pair of cross-connect nodes **306** simply looks like a highly available SDH or SONET connection. The cross-connect nodes **306** communicate as if each is an adjacent SONET or SDH line or multiplex section terminating piece of equipment. Signaling and routing protocols for mesh restoration can communicate unimpeded across the chosen Data Communications Channel (DCC). The present invention cascades multiple optical pro-

tection rings **312**,**314** and combines the protection attributes of these rings **312**,**314** with mesh restoration to achieve a higher availability solution.

For the present invention to work, a hold-off timer is required at each cross-connect node **306**. In the event of a failure, the cross-connect node **306** detects the failure and attempt to recover service. In this scenario, the cross-connect node **306** must wait to confirm that the intermediate 1+1 optical layer protection has not recovered the service before implementing its own recovery efforts. Because the proposed 1+1 optical protection is based on tail-end protection, it is expected to be rapid so the cross-connect node **306** hold off timer can be quite short, i.e. to ensure sub-50 ms restoration.

Referring to FIG. **42**, the network **300** is illustrated with two simultaneous fiber failures **320**,**322** according to an exemplary embodiment of the present invention. Based on the hold-off timer, the cross-connects **306** detect the failures **320**, **322** but wait to implement mesh restoration. During this wait, the optical 1+1 protection is implemented after the DWDM platforms **308** detect the failures within each ring **312**,**314** and provide 1+1 switching. Accordingly, the cross-connects **306** have service restored prior to the hold-off timer expiring, and therefore do not implement mesh restoration. The DWDM platforms **308** can utilize OTN/G.709 to detect the fault on the rings **312**,**314**. After detecting the failure **320** on the first ring **312**, the DWDM platforms **308** switch on ring **312**. After detecting the failure **322** on the second ring **314**, the DWDM platforms **308** switch on the ring **314**.

Referring to FIGS. **43**-**45**, a network **340** illustrates a large-scale deployment of cross-connects **306***a-e* with cascaded protection rings **341**-**352** according to an exemplary embodiment of the present invention. FIG. **43** illustrates an equipment configuration of the network **340** with multiple DWDM platforms **308** forming the cascaded protection rings **341**-**352**. Note, the rings **341**-**352** can include other DWDM platforms **308** and/or regenerators, optical amplifiers, and the like. For illustration purposes, only head-end nodes are illustrated on the rings **341**-**352**.

FIG. **44** illustrates multiple fiber failures **360** on the various cascaded protection rings **341**-**352**. A logical view **362** illustrates how the cross-connects **306***a-e* view the rings **341**-**352**, i.e. as a pipe. A physical view **364** illustrates the physical deployment of the cross-connects **306***a-e* and the rings **341**-**352**. From the cross-connects **306***a-e* viewpoint, the multiple failure **360** are ignored since the optical 1+1 recovers a connection **370** before expiration of the hold-off timer in the cross-connects **306***e*,**306***a*,**306***b* (i.e., the cross-connects affected by the failures **360**). In the physical view **364**, rings **341**-**343**,**352** perform 1+1 switching to recover based on the multiple failures **360**.

FIG. **45** illustrates a second failure **360** on the ring **343** following the failures **360** in FIG. **44**. Here, the connection **370** is now down since there is no fiber path on the rings **352**,**342**-**344** between cross-connect **306***e*,**306***a*,**306***b*. Now, the cross-connects **306***e*,**306***a*,**306***b* detect the failure and implement the hold-off timer again. However, the hold-off time expires without restoration of the connection **370**. Accordingly, the cross-connects **306***a-e* implement mesh restoration to provide a connection **372** between cross-connects **306***e*,**306***d*,**306***c*,**306***b*.

Although the present invention has been illustrated and described herein with reference to preferred embodiments and specific examples thereof, it will be readily apparent to those of ordinary skill in the art that other embodiments and examples may perform similar functions and/or achieve like results. All such equivalent embodiments and examples are within the spirit and scope of the present invention and are intended to be covered by the following claims.

What is claimed is:

1. A directionless reconfigurable optical add/drop multiplexer (ROADM) node for high availability between switch or router ports, the node communicatively coupled to an optical network via at least two links, the node comprising:

a directionless switch, including one or more switches, connected to each of the at least two links and configured to selectively route a lightpath from a client device to any of the at least two links for protection thereof;

wherein the directionless switch is located between the at least two links and the client device, and wherein the client device is not hard-wired to any of the at least two links; and

wherein the directionless switch is configured with a single input/output for the client device and the protection is 1:1 optical protection.

2. The node of claim **1**, wherein the client device has one protection transceiver for up to N working transceivers, and wherein each of the N working transceivers and the one protection transceiver are connected to the directionless switch.

3. The node of claim **1**, wherein the directionless switch includes a receive side and a transmit side, and wherein the at least two links each comprise a wavelength selective switch connected to the receive side and a multiplexer connected to the transmit side.

4. The node of claim **1**, wherein the directionless switch is a combination of switches added based on bandwidth at the node.

5. A directionless switch method for high availability between switch or router ports, the method comprising:

receiving at least two lightpaths from a client device; and

selectively routing the at least two lightpaths to separate degrees of a reconfigurable optical add/drop multiplexer (ROADM) node, wherein each of the separate degrees provides a link to an optical network;

wherein the client device is not hard-wired to any of the separate degrees; and

wherein the receiving is from one of (i) a single input/output for the client device and the protection is 1:1 optical protection and (ii) dual inputs/outputs for the client device and the protection is 1+1 or 1:1.

6. The method of claim **5**, wherein the receiving is from the dual inputs/outputs for the client device with each of the dual inputs/outputs configured for a maximum fill rate of around 50%, and

wherein responsive to a failure affecting one of the dual inputs/outputs, the other of the dual inputs/outputs is set to 100% using a reroute, and the method further comprises

switching the one of the dual inputs/outputs for restoration, and responsive to the restoration, the dual inputs/outputs are configured for the maximum fill rate of around 50%.

7. The method of claim **5**, wherein the client device has one protection transceiver for up to N working transceivers, and wherein each of the N working transceivers and the one protection transceiver are connected to a directionless switch, including one or more switches.

8. A directionless reconfigurable optical add/drop multiplexer (ROADM) node for high availability between switch or router ports, the node communicatively coupled to an optical network via at least two links, the node comprising:

a directionless switch, including one or more switches, connected to each of the at least two links and configured

to selectively route a lightpath from a client device to any of the at least two links for protection thereof;

wherein the directionless switch is located between the at least two links and the client device, and wherein the client device is not hard-wired to any of the at least two links; and

wherein the directionless switch is configured with dual inputs/outputs for the client device and the protection is 1+1 or 1:1.

9. The node of claim **8**, wherein each of the dual inputs/outputs is configured for a maximum fill rate of around 50% of traffic, and

wherein, responsive to a failure affecting one of the dual inputs/outputs, the other of the dual inputs/outputs is set to 100% of the traffic using a reroute, and the directionless switch is configured to switch the one of the dual inputs/outputs for restoration, and responsive to the restoration, the dual inputs/outputs are configured for the maximum fill rate of around 50% of the traffic.

10. The node of claim **8**, wherein the client device has one protection transceiver for up to N working transceivers, and wherein each of the N working transceivers and the one protection transceiver are connected to the directionless switch.

11. The node of claim **8**, wherein the directionless switch includes a receive side and a transmit side, and wherein the at least two links each comprise a wavelength selective switch connected to the receive side and a multiplexer connected to the transmit side.

12. The node of claim **8**, further comprising:

a second directionless switch connected to each of the at least two links, wherein the second directionless switch provides redundancy to the directionless switch,

wherein the client device has dual inputs/outputs each provided to one of the directionless switch and the second directionless switch, and

wherein the directionless switch and the second directionless switch are configured to selectively route lightpaths from the dual inputs/outputs to any of the at least two links for protection thereof.

13. The node of claim **8**, wherein the directionless switch is a combination of switches added based on bandwidth at the node.

* * * * *