US009271203B2

(12) **United States Patent**
Chin et al.

(10) **Patent No.: US 9,271,203 B2**
(45) **Date of Patent: Feb. 23, 2016**

(54) **ALTERNATE TRANSMISSION SCHEME FOR HIGH SPEED PACKET ACCESS (HSPA)**

(75) Inventors: **Tom Chin**, San Diego, CA (US); **Guangming Shi**, San Diego, CA (US); **Kuo-Chun Lee**, San Diego, CA (US)

(73) Assignee: **QUALCOMM Incorporated**, San Diego, CA (US)

(*) Notice: Subject to any disclaimer, the term of this patent is extended or adjusted under 35 U.S.C. 154(b) by 757 days.

(21) Appl. No.: **12/883,986**

(22) Filed: **Sep. 16, 2010**

(65) **Prior Publication Data**

US 2011/0292909 A1 Dec. 1, 2011

Related U.S. Application Data

(60) Provisional application No. 61/348,140, filed on May 25, 2010.

(51) **Int. Cl.**

H04W 4/00	(2009.01)
H04W 36/00	(2009.01)
H04W 36/08	(2009.01)
H04W 56/00	(2009.01)
H04W 72/14	(2009.01)

(52) **U.S. Cl.**

CPC ***H04W 36/0077*** (2013.01); *H04W 36/08* (2013.01); *H04W 56/00* (2013.01); *H04W 72/14* (2013.01)

(58) **Field of Classification Search**

None

See application file for complete search history.

(56) **References Cited**

U.S. PATENT DOCUMENTS

7,903,768	B2 *	3/2011	Zhu et al.	375/343
8,681,771	B2 *	3/2014	Zhang	H04W 72/1289 370/324
2002/0068571	A1	6/2002	Ohlsson et al.	
2005/0094600	A1 *	5/2005	Zhang et al.	370/331
2005/0272426	A1 *	12/2005	Yang	H04W 36/30 455/436
2007/0160029	A1 *	7/2007	Luo et al.	370/350
2007/0275723	A1 *	11/2007	Jeong et al.	455/436

(Continued)

FOREIGN PATENT DOCUMENTS

CN	1848706	A	10/2006
WO	2006072811	A1	7/2006
WO	WO2006110774	A2	10/2006

OTHER PUBLICATIONS

International Search Report and Written Opinion—PCT/US2011/037995, International Search Authority—European Patent Office—Aug. 25, 2011.

(Continued)

Primary Examiner — Steve Young

(74) *Attorney, Agent, or Firm* — Kristine U. Ekwueme

(57) **ABSTRACT**

Post-hard handover processing in a Time Division—Synchronous Code Division Multiple Access (TD-SCDMA) network may be improved to allow operation of High Speed Packet Access (HSPA) in hard handover. For example, uplink synchronization may be completed concurrent with HSPA to quickly resume HSPA operation in hard handovers. User Equipment (UE) may receive downlink data while completing uplink synchronization. In another example, a unique SYNC_UL code may be assigned to a UE for hard handover. The unique SYNC_UL code allows Node Bs of the TD-SCDMA network to know which UE is performing hard handover. When a Node B is receiving the unique SYNC_UL, the Node B may begin to allocate UL data grants. After receiving UL data from the UE, the Node B may resume High Speed Downlink Packet Access (HSDPA).

20 Claims, 8 Drawing Sheets

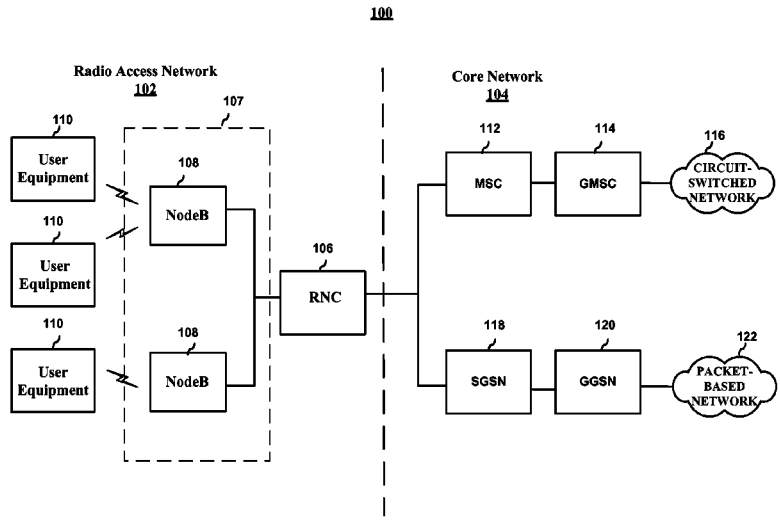

(56) **References Cited**

U.S. PATENT DOCUMENTS

2008/0084849	A1*	4/2008	Wang et al.	370/332
2010/0085929	A1*	4/2010	Harada et al.	370/329
2011/0116468	A1*	5/2011	Zhu	370/331
2011/0171949	A1*	7/2011	Liao	H04W 56/0045 455/422.1
2012/0269166	A1*	10/2012	Chin	H04W 36/0055 370/331

OTHER PUBLICATIONS

Li Shine et al: "TD-SCDMA RTT", Dec. 1, 2004, pp. 39-43,XP55004487,Retrieved from the Internet:URL:http://www.chi na-cic.org.cn/english/digital library/2004121.pdf.

* cited by examiner

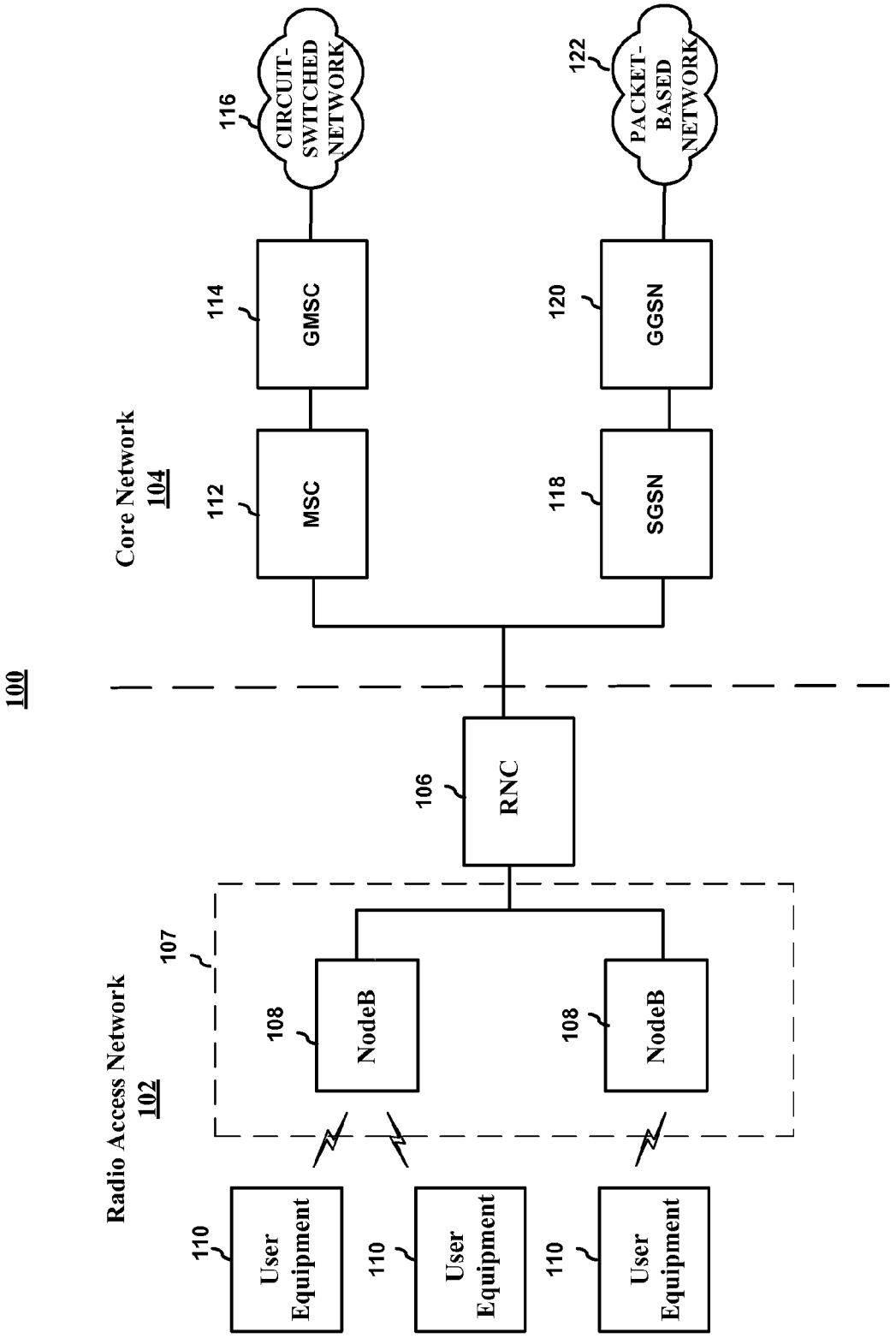
100
Core Network
104
Radio Access Network
102
107
110
User Equipment
110
User Equipment
110
User Equipment
108
NodeB
108
NodeB
106
RNC
112
MSC
114
GMSC
116
CIRCUIT-SWITCHED NETWORK
118
SGSN
120
GGSN
122
PACKET-BASED NETWORK

FIG. 1

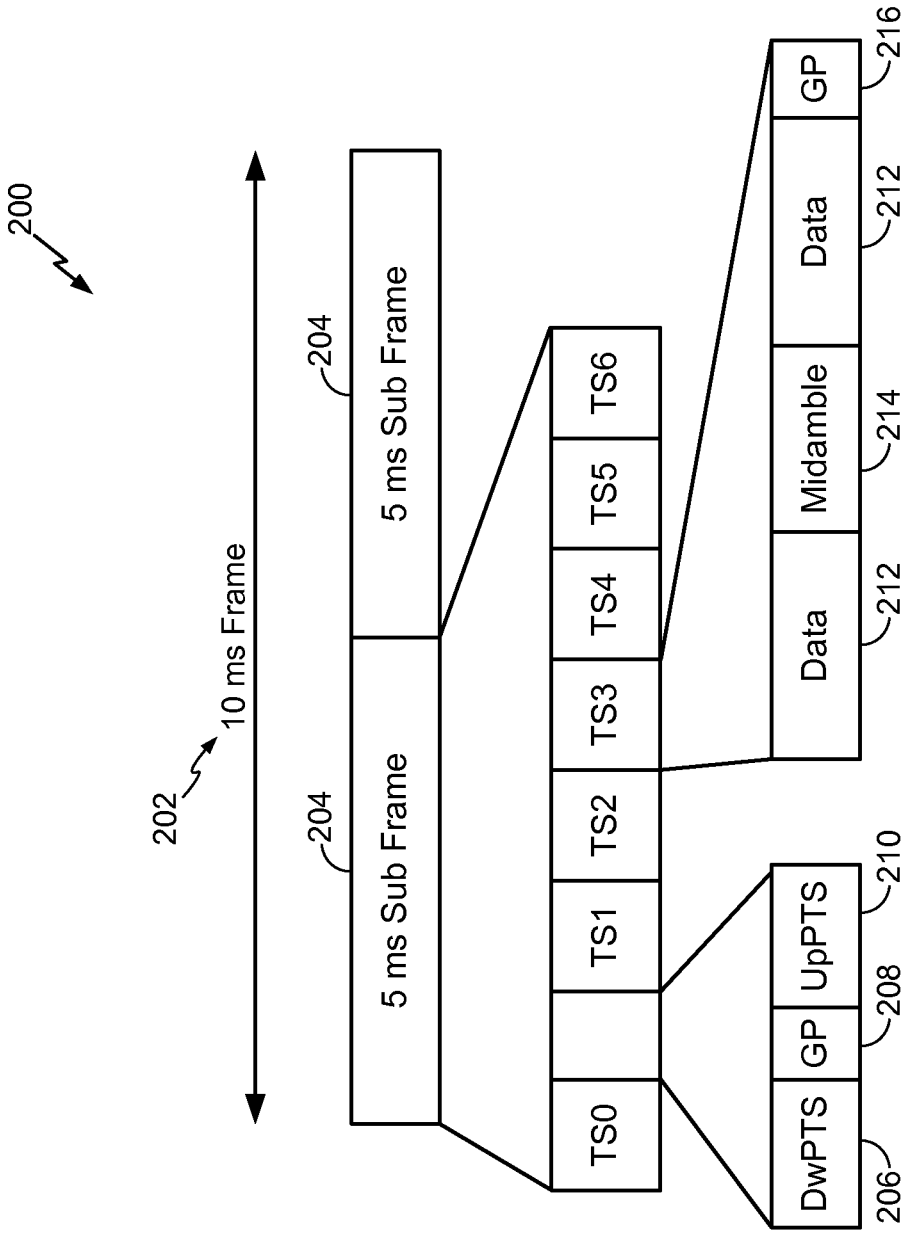
200
202
10 ms Frame
204
5 ms Sub Frame
204
5 ms Sub Frame
TS0
TS1
TS2
TS3
TS4
TS5
TS6
DwPTS
GP
UpPTS
Data
Midamble
Data
GP
206
208
210
212
214
212
216

FIG. 2

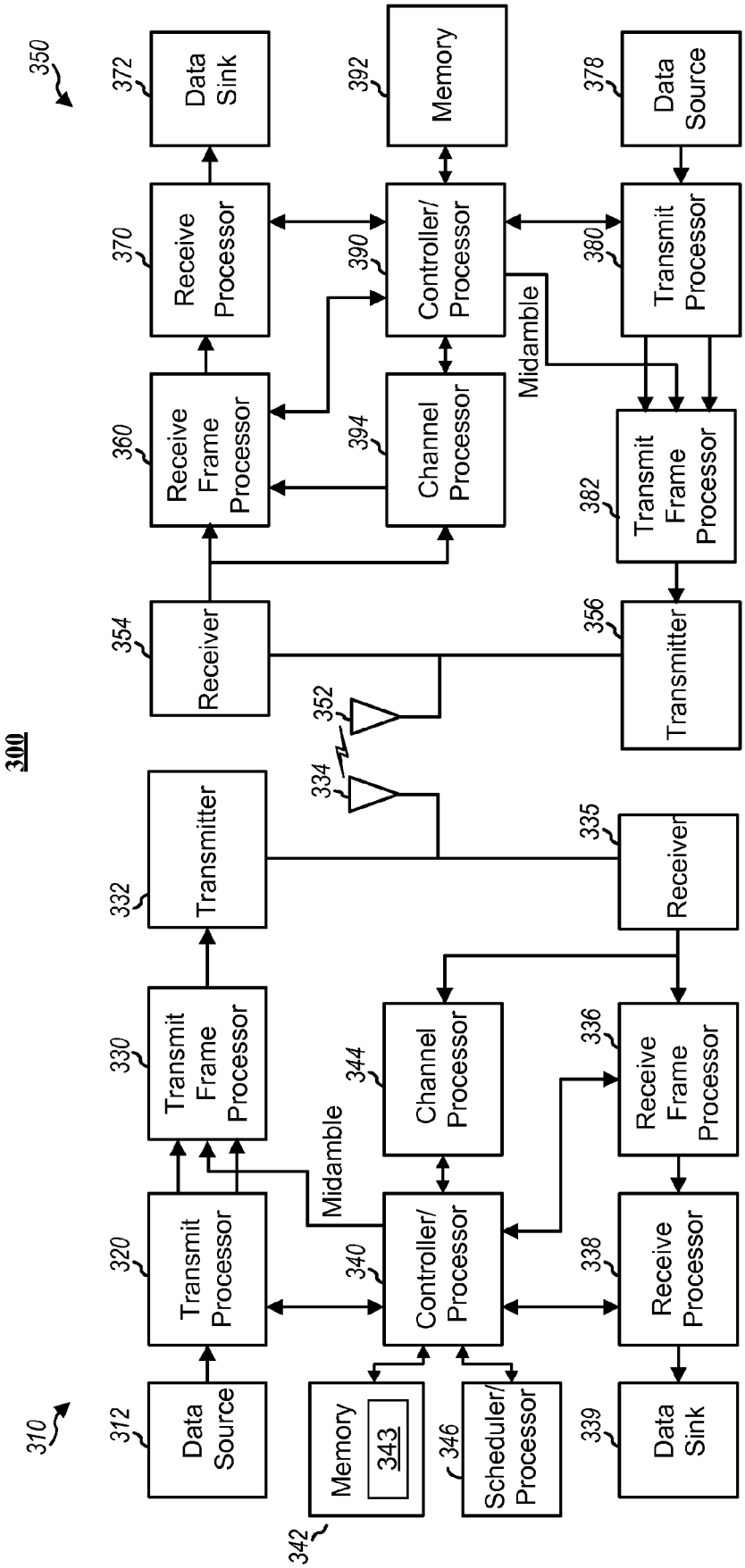
300
310
350
312
Data Source
320
Transmit Processor
330
Transmit Frame Processor
332
Transmitter
334
352
354
Receiver
360
Receive Frame Processor
370
Receive Processor
372
Data Sink
340
Controller/ Processor
342
Memory
343
346
Scheduler/ Processor
344
Channel Processor
Midamble
335
Receiver
336
Receive Frame Processor
338
Receive Processor
339
Data Sink
356
Transmitter
382
Transmit Frame Processor
380
Transmit Processor
378
Data Source
390
Controller/ Processor
392
Memory
394
Channel Processor
Midamble

FIG. 3

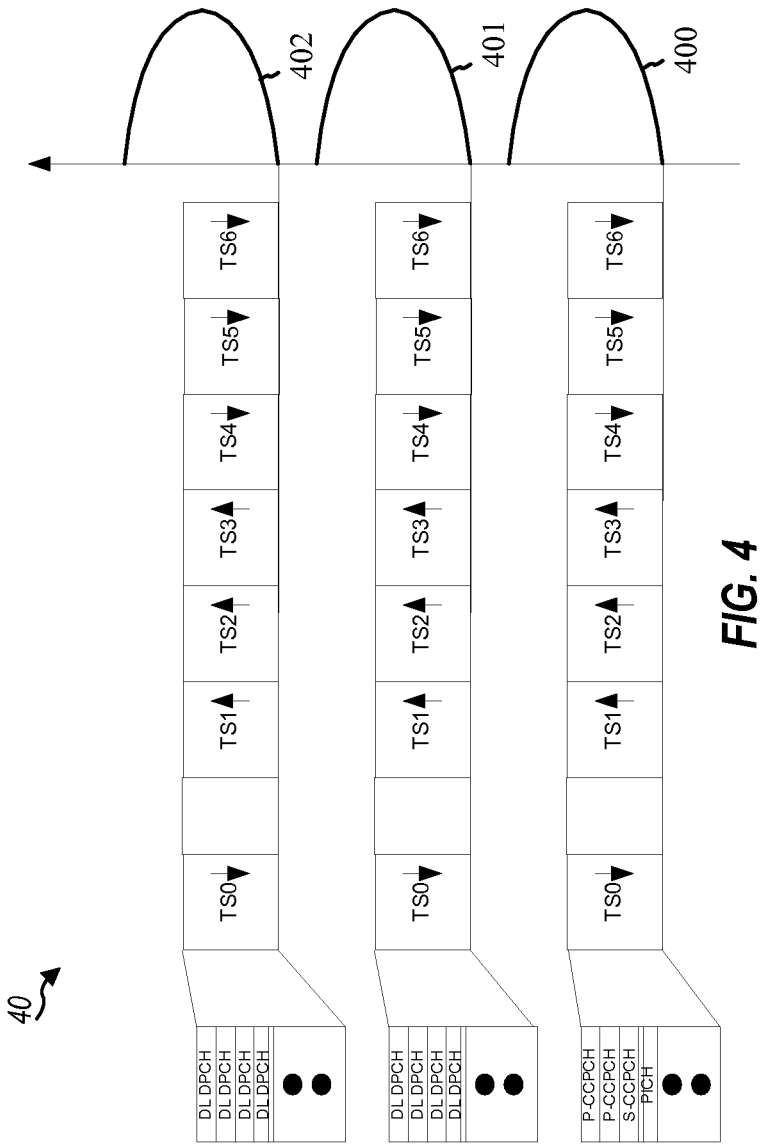
40
DL DPCH
DL DPCH
DL DPCH
DL DPCH
TS0
TS1
TS2
TS3
TS4
TS5
TS6
402
DL DPCH
DL DPCH
DL DPCH
DL DPCH
TS0
TS1
TS2
TS3
TS4
TS5
TS6
401
P-CCPCH
P-CCPCH
S-CCPCH
PICH
TS0
TS1
TS2
TS3
TS4
TS5
TS6
400

FIG. 4

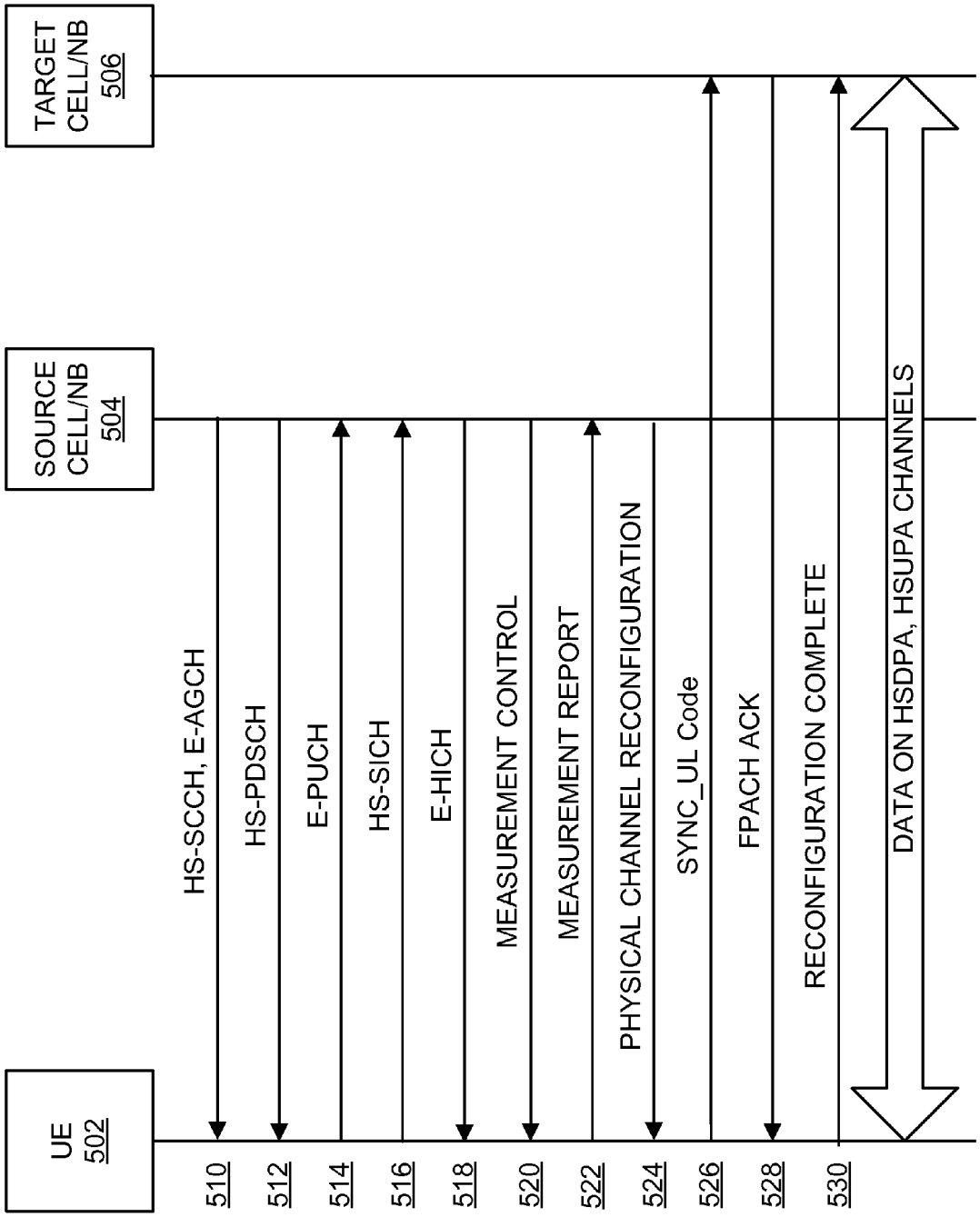
UE
502
SOURCE CELL/NB
504
TARGET CELL/NB
506
HS-SCCH, E-AGCH
HS-PDSCH
E-PUCH
HS-SICH
E-HICH
MEASUREMENT CONTROL
MEASUREMENT REPORT
PHYSICAL CHANNEL RECONFIGURATION
SYNC_UL Code
FPACH ACK
RECONFIGURATION COMPLETE
DATA ON HSDPA, HSUPA CHANNELS
510
512
514
516
518
520
522
524
526
528
530

FIG. 5

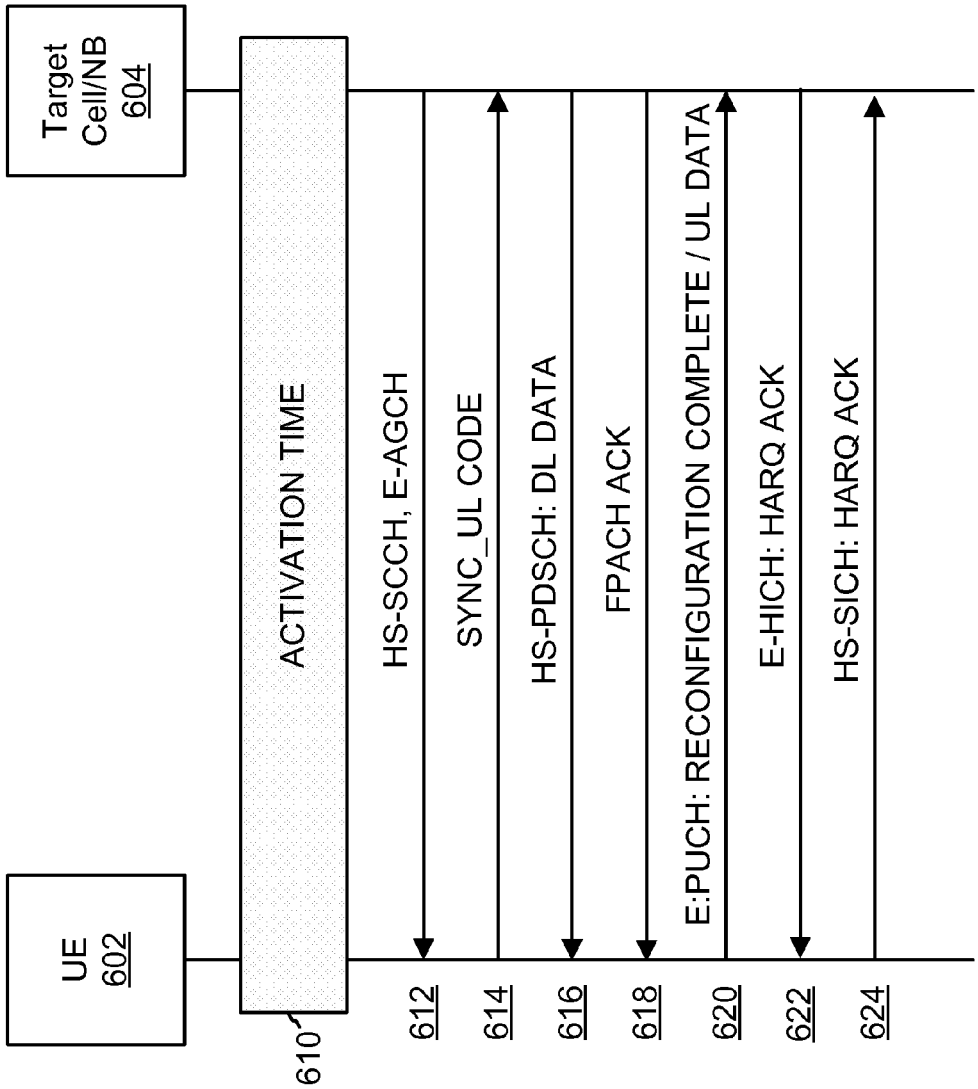
UE
602
Target
Cell/NB
604
610
ACTIVATION TIME
612
HS-SCCH, E-AGCH
614
SYNC_UL CODE
616
HS-PDSCH: DL DATA
618
FPACH ACK
620
E:PUCH: RECONFIGURATION COMPLETE / UL DATA
622
E-HICH: HARQ ACK
624
HS-SICH: HARQ ACK

FIG. 6

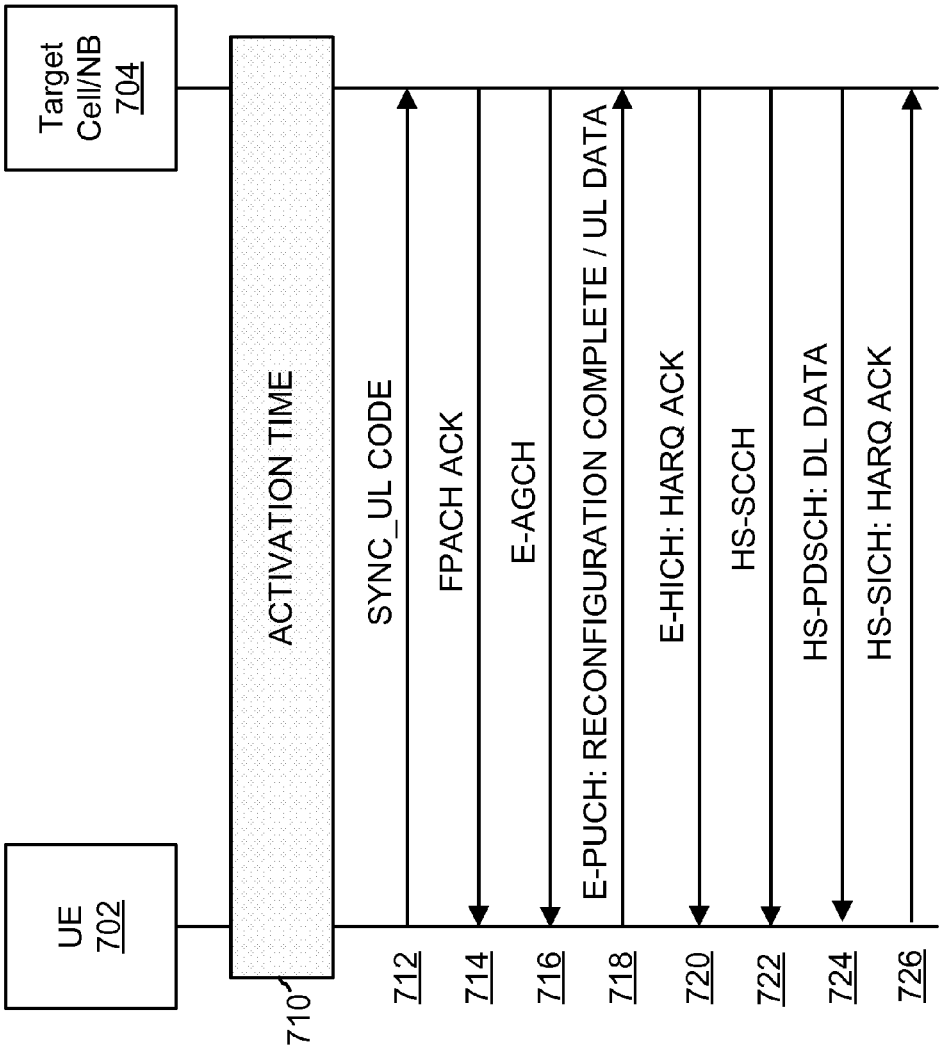
UE
702
Target
Cell/NB
704
710
ACTIVATION TIME
712
SYNC_UL CODE
714
FPACH ACK
716
E-AGCH
718
E-PUCH: RECONFIGURATION COMPLETE / UL DATA
720
E-HICH: HARQ ACK
722
HS-SCCH
724
HS-PDSCH: DL DATA
726
HS-SICH: HARQ ACK

FIG. 7

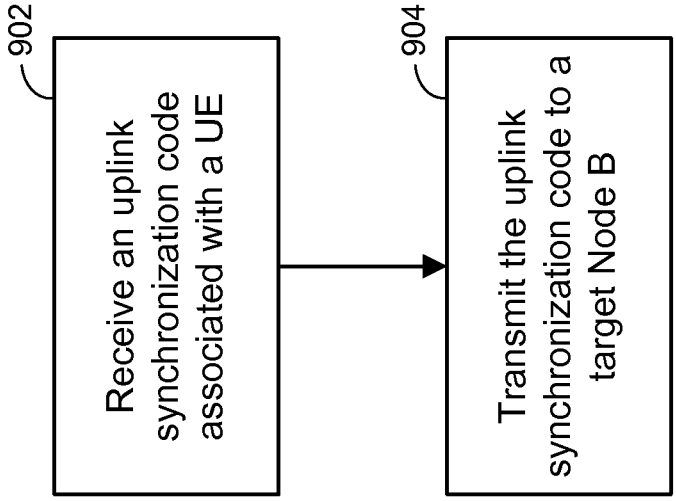
902
Receive an uplink synchronization code associated with a UE
904
Transmit the uplink synchronization code to a target Node B

FIG. 9

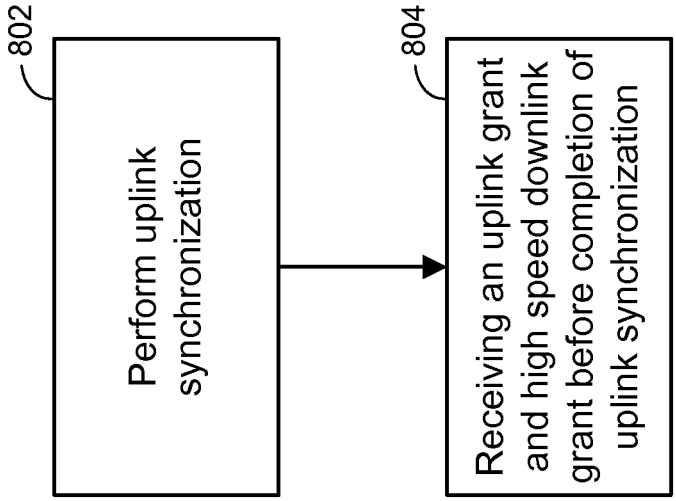
802
Perform uplink synchronization
804
Receiving an uplink grant and high speed downlink grant before completion of uplink synchronization

FIG. 8

ALTERNATE TRANSMISSION SCHEME FOR HIGH SPEED PACKET ACCESS (HSPA)

CROSS REFERENCE TO RELATED APPLICATION

This application claims the benefit of U.S. provisional patent application No. 61/348,140 filed May 25, 2010, in the names of CHIN et al., the disclosure of which is expressly incorporated by reference in its entirety.

BACKGROUND

1. Field

Aspects of the present disclosure relate, in general, to wireless communication systems, and more particularly, to facilitating high performance during High Speed Packet Access (HSPA) in a Time Division—Synchronous Code Division Multiple Access (TD-SCDMA) network.

2. Background

Wireless communication networks are widely deployed to provide various communication services such as telephony, video, data, messaging, broadcasts, and so on. Such networks, which are usually multiple access networks, support communications for multiple users by sharing the available network resources. One example of such a network is the Universal Terrestrial Radio Access Network (UTRAN). The UTRAN is the radio access network (RAN) defined as a part of the Universal Mobile Telecommunications System (UMTS), a third generation (3G) mobile phone technology supported by the 3rd Generation Partnership Project (3GPP). The UMTS, which is the successor to Global System for Mobile Communications (GSM) technologies, currently supports various air interface standards, such as Wideband—Code Division Multiple Access (W-CDMA), Time Division—Code Division Multiple Access (TD-CDMA), and Time Division—Synchronous Code Division Multiple Access (TD-SCDMA). For example, China is pursuing TD-SCDMA as the underlying air interface in the UTRAN architecture with its existing GSM infrastructure as the core network. The UMTS also supports enhanced 3G data communications protocols, such as High Speed Downlink Packet Data (HSDPA), which provides higher data transfer speeds and capacity to associated UMTS networks.

As the demand for mobile broadband access continues to increase, research and development continue to advance the UMTS technologies not only to meet the growing demand for mobile broadband access, but to advance and enhance the user experience with mobile communications.

SUMMARY

In one aspect of the disclosure, a method for performing a handover in a Time Division—Synchronous Code Division Multiple Access (TD-SCDMA) network includes performing uplink synchronization with a target Node B (NB) of the TD-SCDMA network. The method also includes receiving an uplink grant and high speed downlink data from the target NB before completion of the uplink synchronization.

In another aspect, a computer program product for communicating in a wireless network includes a computer-readable medium having code to perform uplink synchronization with a target Node B (NB) of the TD-SCDMA network. The medium also includes code to receive an uplink grant and high speed downlink data from the target NB before completion of the uplink synchronization.

In yet another aspect, an apparatus for communicating in a wireless network includes a processor and a memory coupled to the processor. The processor is configured to perform uplink synchronization with a target Node B (NB) of the TD-SCDMA network. The processor is also configured to receive an uplink grant and high speed downlink data from the target NB before completion of the uplink synchronization.

In a further aspect, an apparatus for communicating in a wireless network includes means for performing uplink synchronization with a target Node B (NB) of the TD-SCDMA network. The apparatus also includes means for receiving an uplink grant and high speed downlink data from the target NB before completion of the uplink synchronization.

In one aspect, a method for performing a handover in a Time Division—Synchronous Code Division Multiple Access (TD-SCDMA) network includes receiving an uplink synchronization code associated with a User Equipment (UE) from a source Node B (NB) of the TD-SCDMA network. The method also includes transmitting the uplink synchronization code to a target NB of the TD-SCDMA network.

In another aspect, a computer program product for communicating in a wireless network includes a computer-readable medium having code to receive an uplink synchronization code associated with a User Equipment (UE) from a source Node B (NB) of the TD-SCDMA network. The medium also includes code to transmit the uplink synchronization code to a target NB of the TD-SCDMA network.

In yet another aspect, an apparatus for communicating in a wireless network includes a processor and a memory coupled to the processor. The processor is configured to receive an uplink synchronization code associated with a User Equipment (UE) from a source Node B (NB) of the TD-SCDMA network. The processor is also configured to transmit the uplink synchronization code to a target NB of the TD-SCDMA network.

In a further aspect, an apparatus for communicating in a wireless network includes means for receiving an uplink synchronization code associated with a User Equipment (UE) from a source Node B (NB) of the TD-SCDMA network. The apparatus also includes means for transmitting the uplink synchronization code to a target NB of the TD-SCDMA network.

BRIEF DESCRIPTION OF THE DRAWINGS

FIG. **1** is a block diagram illustrating an example of a telecommunications system.

FIG. **2** is a block diagram conceptually illustrating an example of a frame structure in a telecommunications system.

FIG. **3** is a block diagram of a Node B in communication with a user equipment in a radio access network.

FIG. **4** is a block diagram illustrating carrier frequencies in a multi-carrier TD-SCDMA communication system.

FIG. **5** is a call flow showing a hard handover in a TD-SCDMA network according to one aspect.

FIG. **6** is a call flow showing a hard handover with concurrent UL synchronization in a TD-SCDMA network according to one aspect.

FIG. **7** is a call flow showing hard handover with a unique SYNC_UL code in a TD-SCDMA network according to one aspect.

FIG. **8** is a flow chart illustrating hard handover in a TD-SCDMA network according to one aspect.

FIG. **9** is a flow chart illustrating hard handover in a TD-SCDMA network according to one aspect.

DETAILED DESCRIPTION

The detailed description set forth below, in connection with the appended drawings, is intended as a description of various

configurations and is not intended to represent the only configurations in which the concepts described herein may be practiced. The detailed description includes specific details for the purpose of providing a thorough understanding of the various concepts. However, it will be apparent to those skilled in the art that these concepts may be practiced without these specific details. In some instances, well-known structures and components are shown in block diagram form in order to avoid obscuring such concepts.

Turning now to FIG. **1**, a block diagram is shown illustrating an example of a telecommunications system **100**. The various concepts presented throughout this disclosure may be implemented across a broad variety of telecommunication systems, network architectures, and communication standards. By way of example and without limitation, the aspects of the present disclosure illustrated in FIG. **1** are presented with reference to a UMTS system employing a TD-SCDMA standard. In this example, the UMTS system includes a (Radio Access Network) RAN **102** (e.g., UTRAN) that provides various wireless services including telephony, video, data, messaging, broadcasts, and/or other services. The RAN **102** may be divided into a number of Radio Network Subsystems (RNSs), such as an RNS **107**, each controlled by a Radio Network Controller (RNC), such as an RNC **106**. For clarity, only the RNC **106** and the RNS **107** are shown; however, the RAN **102** may include any number of RNCs and RNSs in addition to the RNC **106** and RNS **107**. The RNC **106** is an apparatus responsible for, among other things, assigning, reconfiguring and releasing radio resources within the RNS **107**. The RNC **106** may be interconnected to other RNCs (not shown) in the RAN **102** through various types of interfaces, such as a direct physical connection, a virtual network, or the like, using any suitable transport network.

The geographic region covered by the RNS **107** may be divided into a number of cells, with a radio transceiver apparatus serving each cell. A radio transceiver apparatus is commonly referred to as a Node B in UMTS applications, but may also be referred to by those skilled in the art as a Base Station (BS), a Base Transceiver Station (BTS), a radio base station, a radio transceiver, a transceiver function, a Basic Service Set (BSS), an Extended Service Set (ESS), an Access Point (AP), or some other suitable terminology. For clarity, two Node Bs **108** are shown; however, the RNS **107** may include any number of wireless Node Bs. The Node Bs **108** provide wireless access points to a core network **104** for any number of mobile apparatuses. Examples of a mobile apparatus include a cellular phone, a smart phone, a Session Initiation Protocol (SIP) phone, a laptop, a notebook, a netbook, a smartbook, a Personal Digital Assistant (PDA), a satellite radio, a Global Positioning System (GPS) device, a multimedia device, a video device, a digital audio player (e.g., MP3 player), a camera, a game console, or any other similar functioning device. The mobile apparatus is commonly referred to as User Equipment (UE) in UMTS applications, but may also be referred to by those skilled in the art as a mobile station (MS), a subscriber station, a mobile unit, a subscriber unit, a wireless unit, a remote unit, a mobile device, a wireless device, a wireless communications device, a remote device, a mobile subscriber station, an Access Terminal (AT), a mobile terminal, a wireless terminal, a remote terminal, a handset, a terminal, a user agent, a mobile client, a client, or some other suitable terminology. For illustrative purposes, three UEs **110** are shown in communication with the Node Bs **108**. The Downlink (DL), also called the forward link, refers to the communication link from a Node B to a UE, and the Uplink (UL), also called the reverse link, refers to the communication link from a UE to a Node B.

The core network **104**, as shown, includes a GSM core network. However, as those skilled in the art will recognize, the various concepts presented throughout this disclosure may be implemented in a RAN, or other suitable access network, to provide UEs with access to types of core networks other than GSM networks.

In this example, the core network **104** supports circuit-switched services with a mobile switching center (MSC) **112** and a gateway MSC (GMSC) **114**. One or more RNCs, such as the RNC **106**, may be connected to the MSC **112**. The MSC **112** is an apparatus that controls call setup, call routing, and UE mobility functions. The MSC **112** also includes a Visitor Location Register (VLR) (not shown) that contains subscriber-related information for the duration that a UE is in the coverage area of the MSC **112**. The GMSC **114** provides a gateway through the MSC **112** for the UE to access a circuit-switched network **116**. The GMSC **114** includes a Home Location Register (HLR) (not shown) containing subscriber data, such as the data reflecting the details of the services to which a particular user has subscribed. The HLR is also associated with an Authentication Center (AuC) that contains subscriber-specific authentication data. When a call is received for a particular UE, the GMSC **114** queries the HLR to determine the UE's location and forwards the call to the particular MSC serving that location.

The core network **104** also supports packet-data services with a Serving GPRS Support Node (SGSN) **118** and a Gateway GPRS Support Node (GGSN) **120**. GPRS, which stands for General Packet Radio Service, is designed to provide packet-data services at speeds higher than those available with standard GSM circuit-switched data services. The GGSN **120** provides a connection for the RAN **102** to a packet-based network **122**. The packet-based network **122** may be the Internet, a private data network, or some other suitable packet-based network. The primary function of the GGSN **120** is to provide the UEs **110** with packet-based network connectivity. Data packets are transferred between the GGSN **120** and the UEs **110** through the SGSN **118**, which performs primarily the same functions in the packet-based domain as the MSC **112** performs in the circuit-switched domain.

The UMTS air interface is a spread spectrum Direct-Sequence Code Division Multiple Access (DS-CDMA) system. The spread spectrum DS-CDMA spreads user data over a much wider bandwidth through multiplication by a sequence of pseudorandom bits called chips. The TD-SCDMA standard is based on such direct sequence spread spectrum technology and additionally calls for a Time Division Duplexing (TDD), rather than a Frequency Division Duplexing (FDD) as used in many FDD mode UMTS/W-CDMA systems. TDD uses the same carrier frequency for both the Uplink (UL) and Downlink (DL) between a Node B **108** and a UE **110**, but divides uplink and downlink transmissions into different time slots in the carrier.

FIG. **2** shows a frame structure **200** for a TD-SCDMA carrier. The TD-SCDMA carrier, as illustrated, has a frame **202** that is 10 ms in length. The frame **202** has two 5 ms subframes **204**, and each of the subframes **204** includes seven time slots, TS**0** through TS**6**. The first time slot, TS**0**, is usually allocated for downlink communication, while the second time slot, TS**1**, is usually allocated for uplink communication. The remaining time slots, TS**2** through TS**6**, may be used for either uplink or downlink, which allows for greater flexibility during times of higher data transmission times in either the uplink or downlink directions. A Downlink Pilot Time Slot (DwPTS) **206** (also known as the Downlink Pilot Channel (DwPCH)), a guard period (GP) **208**, and an Uplink

Pilot Time Slot (UpPTS) **210** (also known as the uplink pilot channel (UpPCH)) are located between TS**0** and TS**1**. Each time slot, TS**0**-TS**6**, may allow data transmission multiplexed on a maximum of 16 code channels. Data transmission on a code channel includes two data portions **212** separated by a midamble **214** and followed by a Guard Period (GP) **216**. The midamble **214** may be used for features, such as channel estimation, while the GP **216** may be used to avoid inter-burst interference.

FIG. **3** is a block diagram of a Node B **310** in communication with a UE **350** in a RAN **300**, where the RAN **300** may be the RAN **102** in FIG. **1**, the Node B **310** may be the Node B **108** in FIG. **1**, and the UE **350** may be the UE **110** in FIG. **1**. In the downlink communication, a transmit processor **320** may receive data from a data source **312** and control signals from a controller/processor **340**. The transmit processor **320** provides various signal processing functions for the data and control signals, as well as reference signals (e.g., pilot signals). For example, the transmit processor **320** may provide Cyclic Redundancy Check (CRC) codes for error detection, coding and interleaving to facilitate Forward Error Correction (FEC), mapping to signal constellations based on various modulation schemes (e.g., Binary Phase-Shift Keying (BPSK), Quadrature Phase-Shift Keying (QPSK), M-Phase-Shift Keying (M-PSK), M-Quadrature Amplitude Modulation (M-QAM), and the like), spreading with Orthogonal Variable Spreading Factors (OVSF), and multiplying with scrambling codes to produce a series of symbols. Channel estimates from a channel processor **344** may be used by a controller/processor **340** to determine the coding, modulation, spreading, and/or scrambling schemes for the transmit processor **320**. These channel estimates may be derived from a reference signal transmitted by the UE **350** or from feedback contained in the midamble **214** (FIG. **2**) from the UE **350**. The symbols generated by the transmit processor **320** are provided to a transmit frame processor **330** to create a frame structure. The transmit frame processor **330** creates this frame structure by multiplexing the symbols with a midamble **214** (FIG. **2**) from the controller/processor **340**, resulting in a series of frames. The frames are then provided to a transmitter **332**, which provides various signal conditioning functions including amplifying, filtering, and modulating the frames onto a carrier for downlink transmission over the wireless medium through smart antennas **334**. The smart antennas **334** may be implemented with beam steering bidirectional adaptive antenna arrays or other similar beam technologies.

At the UE **350**, a receiver **354** receives the downlink transmission through an antenna **352** and processes the transmission to recover the information modulated onto the carrier. The information recovered by the receiver **354** is provided to a receive frame processor **360**, which parses each frame, and provides the midamble **214** (FIG. **2**) to a channel processor **394** and the data, control, and reference signals to a receive processor **370**. The receive processor **370** then performs the inverse of the processing performed by the transmit processor **320** in the Node B **310**. More specifically, the receive processor **370** descrambles and despreads the symbols, and then determines the most likely signal constellation points transmitted by the Node B **310** based on the modulation scheme. These soft decisions may be based on channel estimates computed by the channel processor **394**. The soft decisions are then decoded and deinterleaved to recover the data, control, and reference signals. The CRC codes are then checked to determine whether the frames were successfully decoded. The data carried by the successfully decoded frames will then be provided to a data sink **372**, which represents applications running in the UE **350** and/or various user interfaces (e.g., display). Control signals carried by successfully decoded frames will be provided to a controller/processor **390**. When frames are unsuccessfully decoded by the receiver processor **370**, the controller/processor **390** may also use an Acknowledgement (ACK) and/or Negative Acknowledgement (NACK) protocol to support retransmission requests for those frames.

In the uplink, data from a data source **378** and control signals from the controller/processor **390** are provided to a transmit processor **380**. The data source **378** may represent applications running in the UE **350** and various user interfaces (e.g., keyboard, pointing device, track wheel, and the like). Similar to the functionality described in connection with the downlink transmission by the Node B **310**, the transmit processor **380** provides various signal processing functions including CRC codes, coding and interleaving to facilitate FEC, mapping to signal constellations, spreading with OVSFs, and scrambling to produce a series of symbols. Channel estimates, derived by the channel processor **394** from a reference signal transmitted by the Node B **310** or from feedback contained in the midamble transmitted by the Node B **310**, may be used to select the appropriate coding, modulation, spreading, and/or scrambling schemes. The symbols produced by the transmit processor **380** will be provided to a transmit frame processor **382** to create a frame structure. The transmit frame processor **382** creates this frame structure by multiplexing the symbols with a midamble **214** (FIG. **2**) from the controller/processor **390**, resulting in a series of frames. The frames are then provided to a transmitter **356**, which provides various signal conditioning functions including amplification, filtering, and modulating the frames onto a carrier for uplink transmission over the wireless medium through the antenna **352**.

The uplink transmission is processed at the Node B **310** in a manner similar to that described in connection with the receiver function at the UE **350**. A receiver **335** receives the uplink transmission through the smart antennas **334** and processes the transmission to recover the information modulated onto the carrier. The information recovered by the receiver **335** is provided to a receive frame processor **336**, which parses each frame, and provides the midamble **214** (FIG. **2**) to the channel processor **344** and the data, control, and reference signals to a receive processor **338**. The receive processor **338** performs the inverse of the processing performed by the transmit processor **380** in the UE **350**. The data and control signals carried by the successfully decoded frames may then be provided to a data sink **339** and the controller/processor **340**, respectively. If some of the frames were unsuccessfully decoded by the receive processor **338**, the controller/processor **340** may also use an Acknowledgement (ACK) and/or Negative Acknowledgement (NACK) protocol to support retransmission requests for those frames.

The controller/processors **340** and **390** may be used to direct the operation at the Node B **310** and the UE **350**, respectively. For example, the controller/processors **340** and **390** may provide various functions including timing, peripheral interfaces, voltage regulation, power management, and other control functions. The computer readable media of memories **342** and **392** may store data and software for the Node B **310** and the UE **350**, respectively. For example, the memory **342** of the Node B **310** includes a handover module **343**, which, when executed by the controller/processor **340**, the handover module **343** configures the Node B to perform handover procedures from the aspect of scheduling and transmission of system messages to the UE **350** for implementing a handover from a source cell to a target cell. A scheduler/processor **346** at the Node B **310** may be used to allocate

resources to the UEs and schedule downlink and/or uplink transmissions for the UEs not only for handovers, but for regular communications as well.

In order to provide more capacity, the TD-SCDMA system may allow multiple carrier signals or frequencies. Assuming that N is the total number of carriers, the carrier frequencies may be represented by the set {F(i), i=0, 1, . . . , N−1}, where the carrier frequency, F(**0**), is the primary carrier frequency and the rest are secondary carrier frequencies. For example, a cell can have three carrier signals whereby the data can be transmitted on some code channels of a time slot on one of the three carrier signal frequencies.

FIG. **4** is a block diagram illustrating carrier frequencies **40** in a multi-carrier TD-SCDMA communication system. The multiple carrier frequencies include a primary carrier frequency **400** (F(**0**)), and two secondary carrier frequencies **401** and **402** (F(**1**) and F(**2**)). In such multi-carrier systems, the system overhead may be transmitted on the first time slot (TS**0**) of the primary carrier frequency **400**, including the Primary Common Control Physical Channel (P-CCPCH), the Secondary Common Control Physical Channel (S-CCPCH), the Pilot Indicator Channel (PICH), and the like. The traffic channels may then be carried on the remaining time slots (TS**1**-TS**6**) of the primary carrier frequency **400** and on the secondary carrier frequencies **401** and **402**. Therefore, in such configurations, a UE will receive system information and monitor the paging messages on the primary carrier frequency **400** while transmitting and receiving data on either one or all of the primary carrier frequency **400** and the secondary carrier frequencies **401** and **402**.

High Speed Downlink Packet Access (HSDPA) protocols in a TD-SCDMA network operate on several channels including a High-Speed Shared Control Channel (HS-SCCH), a High-Speed Physical Downlink Shared Channel (HS-PDSCH), and a High-Speed Shared Information Channel (HS-SICH). The HS-SCCH indicates a Modulation and Coding Scheme (MCS), channelization codes, and time slot resource information for data busts on the HS-PDSCH. The HS-PDSCH is a downlink channel for the UE to receive data. The HS-SICH is an uplink channel for the UE to send Channel Quality Indicator (CQI) reports and HARQ ACK/NACK for HS-PDSCH transmission.

High Speed Uplink Packet Access protocols in a TD-SCDMA network operate on several channels including an Enhanced Dedicated Channel (E-DCH) Physical Uplink Channel (E-PUCH), an Enhanced Dedicated Channel (E-DCH) Absolute Grant Channel (E-AGCH), and an E-DCH Hybrid ARQ Acknowledgement Indicator Channel (E-HICH). The E-PUCH is an uplink channel for the UE to send data. The E-AGCH is a downlink channel for indicating the uplink absolute grant control information. The E-HICH is a downlink channel for sending HARQ ACK/NACK.

Hard handovers occur in TD-SCDMA networks when a UE changes both downlink (DL) and uplink (UL) channels from a source cell (or Node B) to a target cell (or Node B) simultaneously. In hard handovers, the UE performs UL synchronization procedures on the Uplink Pilot Channel (UpPCH) by sending a SYNC_UL code to the target cell and receiving the timing adjustment on the Fast Physical Access Channel (FPACH) from the target cell. The TD-SCDMA network signals from the source cell (or Node B or RNC) the SYNC_UL code resources and FPACH information for use by the UE before hard handover to a target cell. Additionally, the TD-SCDMA network may specify an activation time to the UE during which the hard handover occurs.

FIG. **5** is a call flow showing a hard handover in a TD-SCDMA network according to one aspect. At time **510** a source cell **504** sends to the UE **502** the HS-SCCH and E-AGCH. Then, at time **512** the source cell **504** sends to the UE **502** a HS-PDSCH. At time **514**, the UE **502** sends to the source cell **504** an E-PUCH. Then, at time **516** the UE **502** sends to the source cell **504** a HS-SICH. At time **518** the source cell **504** sends to the UE **502** an E-HICH. Then, at time **520**, the source cell **504** sends to the UE **502** a measurement control message. At time **522**, the UE **502** returns a measurement report to the source cell **504**.

At time **524** the source cell **504** sends to the UE **502** a physical channel reconfiguration message. At time **526** the UE **502** sends a SYNC_UL code to a target cell **506**. The target cell **506** responds at time **528** to the UE **502** with an FPACH acknowledgement. At time **530** the reconfiguration of the UE **502** for the target cell **506** is complete and data on HSDPA and HSUPA channels resumes.

Standards currently do not clearly define how the HSPA channels should resume or whether or not the HSPA communications should resume after completing UL synchronization procedure, i.e. receiving the ACK on FPACH. Moreover, SYNC_UL codes may be shared by multiple UEs such that the target cell can not determine when a UE has completed uplink synchronization and hard handover to the target cell. Thus, there is a need for new post hard handover procedures.

According to one aspect, HSPA reconfiguration occurs concurrently with UL synchronization. Thus, HSPA may quickly resume operation after a hard handover. Concurrent UL synchronization at a target Node B includes allocating the UL data grant on the E-AGCH allowing the UE to send UL data and a physical channel reconfiguration complete message. The target Node B also allocates DL data transmission on the HS-SCCH if DL data is pending for transmission to the UE.

Concurrent UL synchronization occurs on a UE while monitoring the HS-SCCH/HS-PDSCH and the E-AGCH after acquiring a DL of a target Node B. If DL data is pending, the UE receives data on the HS-PDSCH. According to one aspect, the data Acknowledgement (ACK) is sent after receiving the FPACH acknowledgement. If an UL data grant on the E-AGCH is pending, the UE transmits UL data or messages after the UL synchronization completes.

FIG. **6** is a call flow showing a hard handover with concurrent UL synchronization in a TD-SCDMA network according to one aspect. At time **610** a UE **602** enters an activation time for hard handover from a source cell (not shown) to a target cell **604**. Then at time **612** the target cell **604** transmits the HS-SCCH and the E-AGCH to the UE **602**. The E-AGCH may be a code corresponding to the UE. According to one aspect, the E-AGCH is scrambled with a code having a one-to-one correspondence with the media access control (MAC) address of the UE **602**. At time **612**, the target cell **604** performs UL synchronization procedures concurrently with HSDPA and HSUPA transmission; and the UE **602** performs the UL synchronization procedure concurrently with monitoring the HS-SCCH, the HS-PDSCH, and the E-AGCH.

At time **614** the UE **602** transmits the SYNC_UL code to the target cell **604** and at time **616** receives DL data on the HS-PDSCH. According to one aspect, the UE **602** transmits the SYNC_UL code in a different subframe than the target cell **604** sends the DL data on the HS-PDSCH. At time **618** the target cell **604** transmits an acknowledgement on the FPACH to the UE **602**. The FPACH ACK signals the UE **602** to resume transmission of the HS-SICH, the E-PUCH, and the E-HICH.

At time **620**, the UE **602** transmits a physical channel reconfiguration complete message to the target cell **604** over the E-PUCH and transmits uplink data. At time **622** the target

cell **604** transmits a HARQ ACK on the E-HICH to the UE **602** and the UE **602** responds with a HARQ ACK on the HS-SICH at time **624**.

According to another aspect, a source Node B allocates a unique SYNC_UL code to a specific UE for hard handover. The UL synchronization uses the unique SYNC_UL code followed by HSUPA and HSDPA transmissions. When the target Node B receives the SYNC_UL code, the target Node B knows the specific UE is performing a hard handover. When a reconfiguration complete message is sent to the target Node B, the target Node B knows the handover is complete.

During hard handover a UE performs UL synchronization after acquiring a DL of a target NB. Then, after receiving an acknowledgement on the FPACH, the UE begins monitoring the HS-SCCH and the E-AGCH.

During hard handover a target NB allocates UL data grants on the E-AGCH for the UE to send UL data and a physical channel reconfiguration complete message while receiving the SYNC _UL code and sending an acknowledgement on the FPACH. According to one aspect, a small amount of UL data grants occur periodically in each subframe. After receiving UL data from the UE, the NB resumes HSDPA if DL data is pending by allocating DL data to the UE on the HS-SCCH.

FIG. **7** is a call flow showing hard handover with a unique SYNC_UL code in a TD-SCDMA network according to one aspect. At time **710** during an activation time a UE **702** performs hard handover to a target cell **704**. At time **712** the UE **702** transmits a unique SYNC_UL code to the target cell **704** and the target cell **704** responds with an acknowledgement on the FPACH at time **714**. After sending the FPACH ACK, the target cell **714** resumes HSUPA operation. After receiving the FPACH ACK at time **714**, the UE **702** resumes HSDPA and HSUPA operation. Then, at time **716** the target cell **704** transmits the E-AGCH to the UE **702** and the UE **702** sends a reconfiguration complete message on the E-PUCH along with pending UL data at time **718**. According to one aspect, the E-AGCH is scrambled with a code having a one-to-one correspondence with the MAC address of the UE **702**. The target cell **704** resumes HSDPA operation after receiving the first UL data at time **718**.

At time **720** the target cell **704** sends a HARQ acknowledgement on the E-HICH and at time **722** transmits the HS-SCCH. At time **724** the target cell **704** transmits pending DL data on the HS-PDSCH to the UE **702**. Then, the UE **702** transmits a HARQ acknowledgement on the HS-SICH at time **726**.

Performing post-hard handover processing according to the aspects above allows HSPA operations to continue in the hard handover with reduced latency.

FIG. **8** is a flow chart illustrating hard handover in a TD-SCDMA network according to one aspect. At block **802** a UE performs uplink synchronization with a target Node B (NB) of the wireless network. At block **804** a UE receives an uplink grant and high speed downlink data from the target NB before completion of the uplink synchronization.

FIG. **9** is a flow chart illustrating hard handover in a TD-SCDMA network according to one aspect. At block **902** a UE receives a unique uplink synchronization from a source Node B (NB) of the wireless network. At block **904** the UE transmits the uplink synchronization code to a target NB of the wireless network.

Several aspects of a telecommunications system has been presented with reference to TD-SCDMA. As those skilled in the art will readily appreciate, various aspects described throughout this disclosure may be extended to other telecommunication systems, network architectures and communication standards. By way of example, various aspects may be extended to other UMTS systems such as W-CDMA, High Speed Downlink Packet Access (HSDPA), High Speed Uplink Packet Access (HSUPA), High Speed Packet Access Plus (HSPA+) and TD-CDMA. Various aspects may also be extended to systems employing Long Term Evolution (LTE) (in FDD, TDD, or both modes), LTE-Advanced (LTE-A) (in FDD, TDD, or both modes), CDMA2000, Global System for Mobile Communications (GSM), Evolution-Data Optimized (EV-DO), Ultra Mobile Broadband (UMB), IEEE 802.11 (Wi-Fi), IEEE 802.16 (WiMAX), IEEE 802.20, Ultra-Wideband (UWB), Bluetooth, and/or other suitable systems. The actual telecommunication standard, network architecture, and/or communication standard employed will depend on the specific application and the overall design constraints imposed on the system.

Several processors have been described in connection with various apparatuses and methods. These processors may be implemented using electronic hardware, computer software, or any combination thereof. Whether such processors are implemented as hardware or software will depend upon the particular application and overall design constraints imposed on the system. By way of example, a processor, any portion of a processor, or any combination of processors presented in this disclosure may be implemented with a microprocessor, microcontroller, Digital Signal Processor (DSP), a Field-Programmable Gate Array (FPGA), a Programmable Logic Device (PLD), a state machine, gated logic, discrete hardware circuits, and other suitable processing components configured to perform the various functions described throughout this disclosure. The functionality of a processor, any portion of a processor, or any combination of processors presented in this disclosure may be implemented with software being executed by a microprocessor, microcontroller, DSP, or other suitable platform.

Software shall be construed broadly to mean instructions, instruction sets, code, code segments, program code, programs, subprograms, software modules, applications, software applications, software packages, routines, subroutines, objects, executables, threads of execution, procedures, functions, etc., whether referred to as software, firmware, middleware, microcode, hardware description language, or otherwise. The software may reside on a computer-readable medium. A computer-readable medium may include, by way of example, memory such as a magnetic storage device (e.g., hard disk, floppy disk, magnetic strip), an optical disk (e.g., Compact Disc (CD), Digital Versatile Disc (DVD)), a smart card, a flash memory device (e.g., card, stick, key drive), Random Access Memory (RAM), Read Only Memory (ROM), Programmable ROM (PROM), Erasable PROM (EPROM), Electrically Erasable PROM (EEPROM), a register, or a removable disk. Although memory is shown separate from the processors in the various aspects presented throughout this disclosure, the memory may be internal to the processors (e.g., cache or register).

Computer-readable media may be embodied in a computer-program product. By way of example, a computer-program product may include a computer-readable medium in packaging materials. Those skilled in the art will recognize how best to implement the described functionality presented throughout this disclosure depending on the particular application and the overall design constraints imposed on the overall system.

It is to be understood that the specific order or hierarchy of steps in the methods disclosed is an illustration of exemplary processes. Based upon design preferences, it is understood that the specific order or hierarchy of steps in the methods may be rearranged. The accompanying method claims

present elements of the various steps in a sample order, and are not meant to be limited to the specific order or hierarchy presented unless specifically recited therein.

The previous description is provided to enable any person skilled in the art to practice the various aspects described herein. Various modifications to these aspects will be readily apparent to those skilled in the art, and the generic principles defined herein may be applied to other aspects. Thus, the claims are not intended to be limited to the aspects shown herein, but is to be accorded the full scope consistent with the language of the claims, wherein reference to an element in the singular is not intended to mean "one and only one" unless specifically so stated, but rather "one or more." Unless specifically stated otherwise, the term "some" refers to one or more. A phrase referring to "at least one of" a list of items refers to any combination of those items, including single members. As an example, "at least one of: a, b, or c" is intended to cover: a; b; c; a and b; a and c; b and c; and a, b and c. All structural and functional equivalents to the elements of the various aspects described throughout this disclosure that are known or later come to be known to those of ordinary skill in the art are expressly incorporated herein by reference and are intended to be encompassed by the claims. Moreover, nothing disclosed herein is intended to be dedicated to the public regardless of whether such disclosure is explicitly recited in the claims. No claim element is to be construed under the provisions of 35 U.S.C. §112, sixth paragraph, unless the element is expressly recited using the phrase "means for" or, in the case of a method claim, the element is recited using the phrase "step for."

What is claimed is:

1. A method for performing a handover in a Time Division—Synchronous Code Division Multiple Access (TD-SCDMA) network, comprising:

receiving an uplink synchronization code unique to a user equipment (UE) from a source Node B (NB) of the TD-SCDMA network;

performing uplink synchronization with a target Node B (NB) of the TD-SCDMA network after changing both downlink and uplink channels from the source NB to the target NB to stop high speed data communication including high speed downlink data from the source NB and high speed uplink data to the source NB at an activation time specified by the TD-SCDMA network and communicated to the UE, the activation time indicating a time during which handover of the high speed data communication with the target NB occurs;

receiving a data uplink grant assigning network resources for resuming sending uplink data and receiving high speed downlink data from the target NB before completion of the uplink synchronization, the data uplink grant allocated to the UE based at least in part on the uplink synchronization code unique to the UE, the uplink data sent to the target NB and the high speed downlink data from the target NB associated with the high speed data communication handed over from the source NB.

2. The method of claim **1**, further comprising transmitting a message to the target NB after completion of the uplink synchronization, wherein the message indicates completion of the handover.

3. A computer program product for performing a handover in a Time Division—Synchronous Code Division Multiple Access (TD-SCDMA) network, comprising:

a non-transitory computer-readable medium comprising:

code to receive an uplink synchronization code unique to a user equipment (UE) from a source Node B (NB) of the TD-SCDMA network;

code to perform uplink synchronization with a target Node B (NB) of the TD-SCDMA network after changing both downlink and uplink channels from the source NB to the target NB to stop high speed data communication including high speed downlink data from the source NB and high speed uplink data to the source NB at an activation time specified by the TD-SCDMA network and communicated to the UE, the activation time indicating a time during which handover of the high speed data communication with the target NB occurs; and

code to receive a data uplink grant assigning network resources for resuming sending uplink data and to receive high speed downlink data from the target NB before completion of the uplink synchronization, the data uplink grant allocated to the UE based at least in part on the uplink synchronization code unique to the UE, the uplink data sent to the target NB and the high speed downlink data from the target NB associated with the high speed data communication handed over from the source NB.

4. The computer program product of claim **3**, wherein the medium further comprises code to transmit a message to the target NB after completion of the uplink synchronization indicating completion of the handover.

5. An apparatus for performing a handover in a Time Division—Synchronous Code Division Multiple Access (TD-SCDMA) network, comprising:

at least one processor; and

a memory coupled to the at least one processor, wherein the at least one processor is configured:

to receive an uplink synchronization code unique to a user equipment (UE) from a source Node B (NB) of the TD-SCDMA network;

to perform uplink synchronization with a target Node B (NB) of the TD-SCDMA network after changing both downlink and uplink channels from the source NB to the target NB to stop high speed data communication including high speed downlink data from the source NB and high speed uplink data to the source NB at an activation time specified by the TD-SCDMA network and communicated to the UE, the activation time indicating a time during which handover of the high speed data communication with the target NB occurs; and

to receive a data uplink grant assigning network resources for resuming sending uplink data and to receive high speed downlink data from the target NB before completion of the uplink synchronization, the data uplink grant allocated to the UE based at least in part on the uplink synchronization code unique to the UE, the uplink data sent to the target NB and the high speed downlink data from the target NB associated with the high speed data communication handed over from the source NB.

6. The apparatus of claim **5**, wherein the at least one processor is further configured to transmit a message to the target NB after completion of the uplink synchronization indicating completion of the handover.

7. An apparatus for performing a handover in a Time Division—Synchronous Code Division Multiple Access (TD-SCDMA) network, comprising:

means for receiving an uplink synchronization code unique to a user equipment (UE) from a source Node B (NB) of the TD-SCDMA network;

means for performing uplink synchronization with a target Node B (NB) of the TD-SCDMA network after changing both downlink and uplink channels from the source NB to the target NB to stop high speed data communication including high speed downlink data from the

source NB and high speed uplink data to the source NB at an activation time specified by the TD-SCDMA network and communicated to the UE, the activation time indicating a time during which handover of the high speed data communication with the target NB occurs; and

means for receiving a data uplink grant assigning network resources for resuming sending uplink data and for receiving high speed downlink data from the target NB before completion of the uplink synchronization, the data uplink grant allocated to the UE based at least in part on the uplink synchronization code unique to the UE, the uplink data sent to the target NB and the high speed downlink data from the target NB associated with the high speed data communication handed over from the source NB.

8. The apparatus of claim **7**, further comprising means for transmitting a message to the target NB after completion of the uplink synchronization, wherein the message indicates completion of the handover.

9. A method for performing a handover in a Time Division—Synchronous Code Division Multiple Access (TD-SCDMA) network, comprising:

receiving an uplink synchronization code unique to a User Equipment (UE) from a source Node B (NB) of the TD-SCDMA network;

changing both downlink and uplink channels from the source NB to a target NB to stop high speed data communication including high speed downlink data from the source NB and high speed uplink data to the source NB at an activation time specified by the TD-SCDMA network and communicated to the UE, the activation time indicating a time during which handover of the high speed data communication with the target NB occurs;

transmitting the uplink synchronization code to the target NB of the TD-SCDMA network after the activation time in accordance with an uplink synchronization;

receiving a data uplink grant assigning network resources for resuming sending uplink data and receiving high speed downlink data from the target NB before completion of the uplink synchronization, the data uplink grant allocated to the UE based at least in part on the uplink synchronization code unique to the UE; and

resuming high speed data communication including sending uplink data and receiving high speed downlink data from the target NB before completion of the uplink synchronization, the high speed data communication with the target NB associated with the high speed data communication handed over from the source NB.

10. The method of claim **9**, further comprising:

receiving a synchronization acknowledgement; and

transmitting a message to the target NB, the message indicating completion of the handover.

11. The method of claim **9**, wherein the uplink synchronization code comprises one of a set of synchronization codes for the handover.

12. A computer program product for performing a handover in a Time Division—Synchronous Code Division Multiple Access (TD-SCDMA) network, comprising:

a non-transitory computer-readable medium comprising:

code to receive an uplink synchronization code unique to a User Equipment (UE) from a source Node B (NB) of the TD-SCDMA network;

code to change both downlink and uplink channels from the source NB to a target NB to stop high speed data communication including high speed downlink data from the source NB and high speed uplink data to the source NB at an activation time specified by the TD-SCDMA network and communicated to the UE, the activation time indicating a time during which handover of the high speed data communication to the target NB occurs;

code to transmit the uplink synchronization code to the target NB of the TD-SCDMA network after the activation time in accordance with an uplink synchronization;

code to receive a data uplink grant assigning network resources for resuming sending uplink data and receiving high speed downlink data from the target NB before completion of the uplink synchronization, the data uplink grant allocated to the UE based at least in part on the uplink synchronization code unique to the UE; and

code to resume high speed data communication including sending uplink data and receiving high speed downlink data from the target NB before completion of the uplink synchronization, the high speed data communication with the target NB associated with the high speed data communication handed over from the source NB.

13. The computer program product of claim **12**, wherein the medium further comprises:

code to receive a synchronization acknowledgement; and

code to transmit a message to the target NB, the message indicating completion of the handover.

14. The computer program product of claim **12**, wherein the uplink synchronization code comprises one of a set of synchronization codes for the handover.

15. An apparatus for performing a handover in a Time Division—Synchronous Code Division Multiple Access (TD-SCDMA) network, the apparatus comprising:

at least one processor; and a memory coupled to the at least one processor, wherein the at least one processor is configured:

to receive an uplink synchronization code unique to a User Equipment (UE) from a source Node B (NB) of the TD-SCDMA network;

to change both downlink and uplink channels from the source NB to a target NB to stop high speed data communication including high speed downlink data from the source NB and high speed uplink data to the source NB at an activation time specified by the TD-SCDMA network and communicated to the UE, the activation time indicating a time during which handover of the high speed data communication to the target NB occurs;

to transmit the uplink synchronization code to the target NB of the TD-SCDMA network after the activation time in accordance with an uplink synchronization;

to receive a data uplink grant assigning network resources for resuming sending uplink data and receiving high speed downlink data from the target NB before completion of the uplink synchronization, the data uplink grant allocated to the UE based at least in part on the uplink synchronization code unique to the UE; and

to resume high speed data communication including sending uplink data and receiving high speed downlink data from the target NB before completion of the uplink synchronization, the high speed data communication with the target NB associated with the high speed data communication handed over from the source NB.

16. The apparatus of claim **15**, wherein the at least one processor is further configured:

to receive a synchronization acknowledgement; and

to transmit a message to the target NB, the message indicating completion of the handover.

17. The apparatus of claim **15**, wherein the uplink synchronization code is unique to the UE for the handover.

18. An apparatus for performing a handover in a Time Division—Synchronous Code Division Multiple Access (TD-SCDMA) network, comprising:

means for receiving an uplink synchronization code unique to a User Equipment (UE) from a source Node B (NB) of the TD-SCDMA network;

means for changing both downlink and uplink channels from the source NB to a target NB to stop high speed data communication including high speed downlink data from the source NB and high speed uplink data to the source NB at an activation time specified by the TD-SCDMA network and communicated to the UE, the activation time indicating a time during which handover of the high speed data communication to the target NB occurs;

means for transmitting the uplink synchronization code to the target NB of the TD-SCDMA network after the activation time in accordance with an uplink synchronization;

means for receiving a data uplink grant assigning network resources for resuming sending uplink data and receiving high speed downlink data from the target NB before completion of the uplink synchronization, the data uplink grant allocated to the UE based at least in part on the uplink synchronization code unique to the UE; and

means for resuming high speed data communication including sending uplink data and receiving high speed downlink data from the target NB before completion of the uplink synchronization, the high speed data communication with the target NB associated with the high speed data communication handed over from the source NB.

19. The apparatus of claim **18**, further comprising:

means for receiving a synchronization acknowledgement; and

means for transmitting a message to the target NB, the message indicating completion of the handover.

20. The apparatus of claim **18**, wherein the uplink synchronization code is unique to the UE for the handover.

* * * * *