US009482002B2

(12) **United States Patent**
Johnson et al.

(10) **Patent No.: US 9,482,002 B2**
(45) **Date of Patent: Nov. 1, 2016**

(54) **MULTI-USE BUILDING BLOCK AND METHODS**

(71) Applicant: **ANCHOR WALL SYSTEMS, INC.**, Minnetonka, MN (US)

(72) Inventors: **Jay J. Johnson**, Star Prairie, WI (US); **Robert B. Burnquist**, Chaska, MN (US); **Steven Paul Bennett**, Coon Rapids, MN (US)

(73) Assignee: **Anchor Wall Systems, Inc.**, Minnetonka, MN (US)

(*) Notice: Subject to any disclaimer, the term of this patent is extended or adjusted under 35 U.S.C. 154(b) by 0 days.

(21) Appl. No.: **14/891,011**

(22) PCT Filed: **May 13, 2014**

(86) PCT No.: **PCT/US2014/037874**

§ 371 (c)(1),
(2) Date: **Nov. 13, 2015**

(87) PCT Pub. No.: **WO2014/186376**

PCT Pub. Date: **Nov. 20, 2014**

(65) **Prior Publication Data**

US 2016/0090739 A1 Mar. 31, 2016

Related U.S. Application Data

(60) Provisional application No. 61/823,650, filed on May 15, 2013.

(51) **Int. Cl.**
E04C 1/00 (2006.01)
E04B 2/12 (2006.01)
(Continued)

(52) **U.S. Cl.**
CPC . ***E04C 1/00*** (2013.01); ***E04B 2/04*** (2013.01); ***E04B 2/12*** (2013.01); ***E04C 1/395*** (2013.01); ***E04C 3/34*** (2013.01); *E04B 2002/026* (2013.01); *E04B 2002/0265* (2013.01)

(58) **Field of Classification Search**
CPC E04B 1/04; E04B 2002/0265; E04B 2103/02; E04B 2002/0263; E04B 2/10; E04B 2/08; E04B 2002/0234; E04B 2002/0208; E04B 2002/0206; E04B 2/18; E04B 2/12; E04B 2/36; E04B 2/26; E04B 2002/026; E04B 2002/0232; E04C 1/39; E04C 1/00; E04C 1/395; E04C 3/34; E02D 29/02
USPC 52/586
See application file for complete search history.

(56) **References Cited**

U.S. PATENT DOCUMENTS

1,585,374 A 5/1926 Carlson
3,998,022 A 12/1976 Muse
(Continued)

FOREIGN PATENT DOCUMENTS

BE 508 118 A 1/1952
EP 0 130 889 A1 1/1985
(Continued)

OTHER PUBLICATIONS

International Search Report for corresponding International Patent Application No. PCT/US2014/037874 mailed Nov. 27, 2014.

Primary Examiner — Beth Stephan
(74) *Attorney, Agent, or Firm* — Merchant & Gould P.C.

(57) **ABSTRACT**

A multi-use block (**170**) including a block body (**172**) having at least a first leg (**192**). The blocks (**170**) can be placed in different orientations with respect to each other to form multiple interlocking structures. The block (**170**) can be of a variety of materials, including concrete. It is used for making walls and columns. Methods of making and methods of use of the block (**170**) are provided.

22 Claims, 20 Drawing Sheets

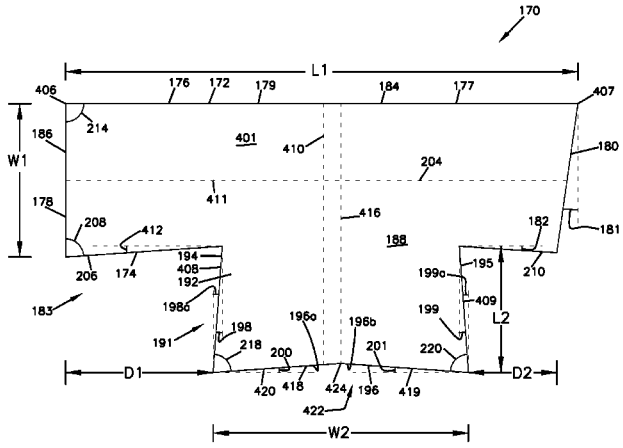

(51) **Int. Cl.**

E04C 1/39	(2006.01)
E04B 2/04	(2006.01)
E04C 3/34	(2006.01)
E04B 2/02	(2006.01)

(56) **References Cited**

U.S. PATENT DOCUMENTS

D244,201	S	5/1977	Muse	
4,123,881	A	11/1978	Muse	
4,896,999	A	1/1990	Ruckstuhl	
5,820,305	A	10/1998	Taylor et al.	
6,464,199	B1	10/2002	Johnson	
6,679,022	B1 *	1/2004	Corporaal	E04B 2/08 52/590.2
7,140,867	B2	11/2006	Scherer et al.	
7,757,451	B2 *	7/2010	Lee Lum	E04C 1/392 52/302.4
8,327,833	B2	12/2012	Scherer et al.	
8,430,603	B2 *	4/2013	Price	E04C 1/395 405/262
9,089,096	B1 *	7/2015	Ulrich	A01G 1/08
2001/0054268	A1	12/2001	Coleman	
2005/0241257	A1	11/2005	Price	
2011/0265418	A1 *	11/2011	Wolter	E04C 1/00 52/561

FOREIGN PATENT DOCUMENTS

FR	493 473	A	8/1919
GB	276 833	A	9/1927
GB	2 179 686	A	3/1987
WO	2008/151403	A1	12/2008

* cited by examiner

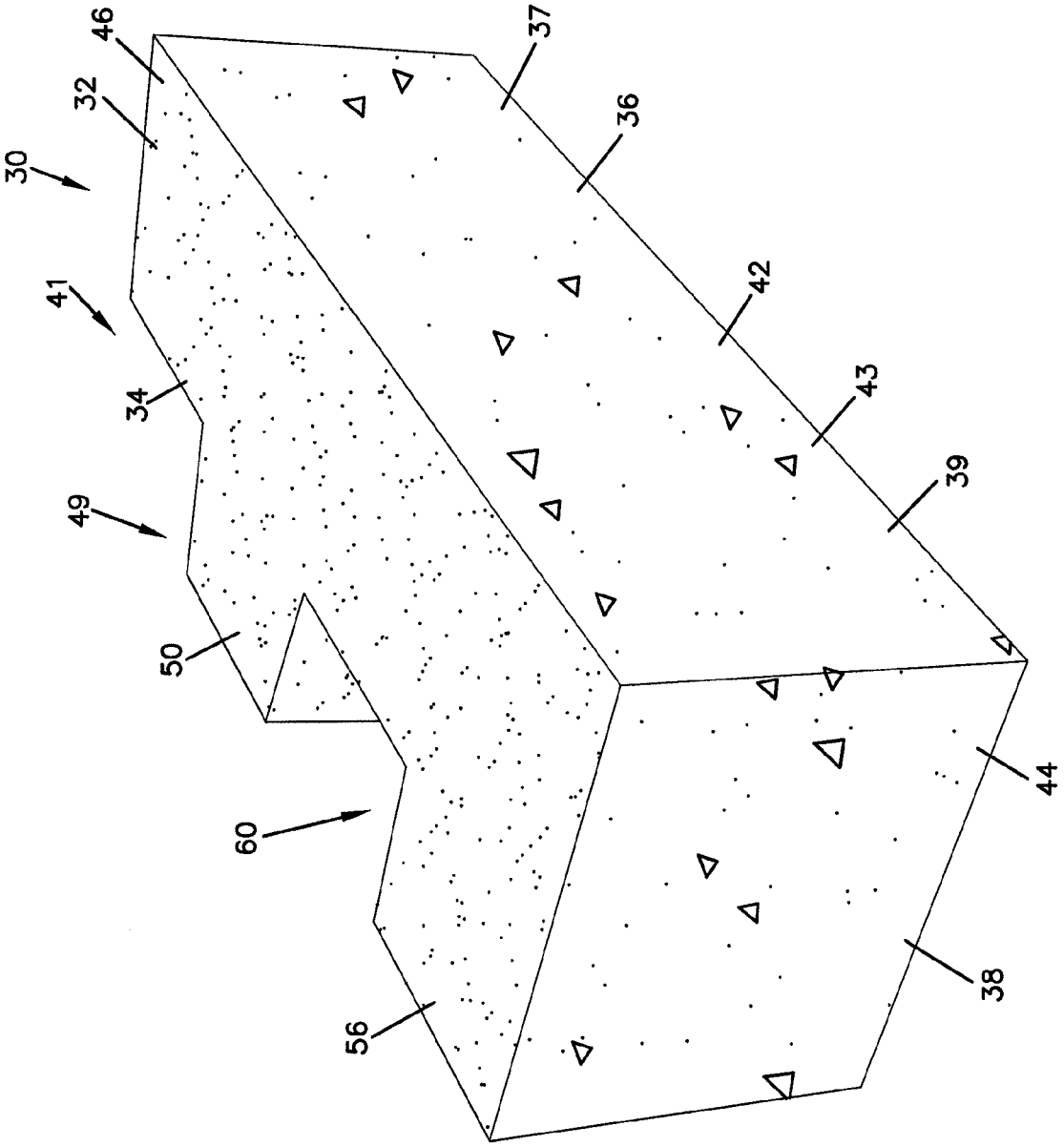

FIG. 1

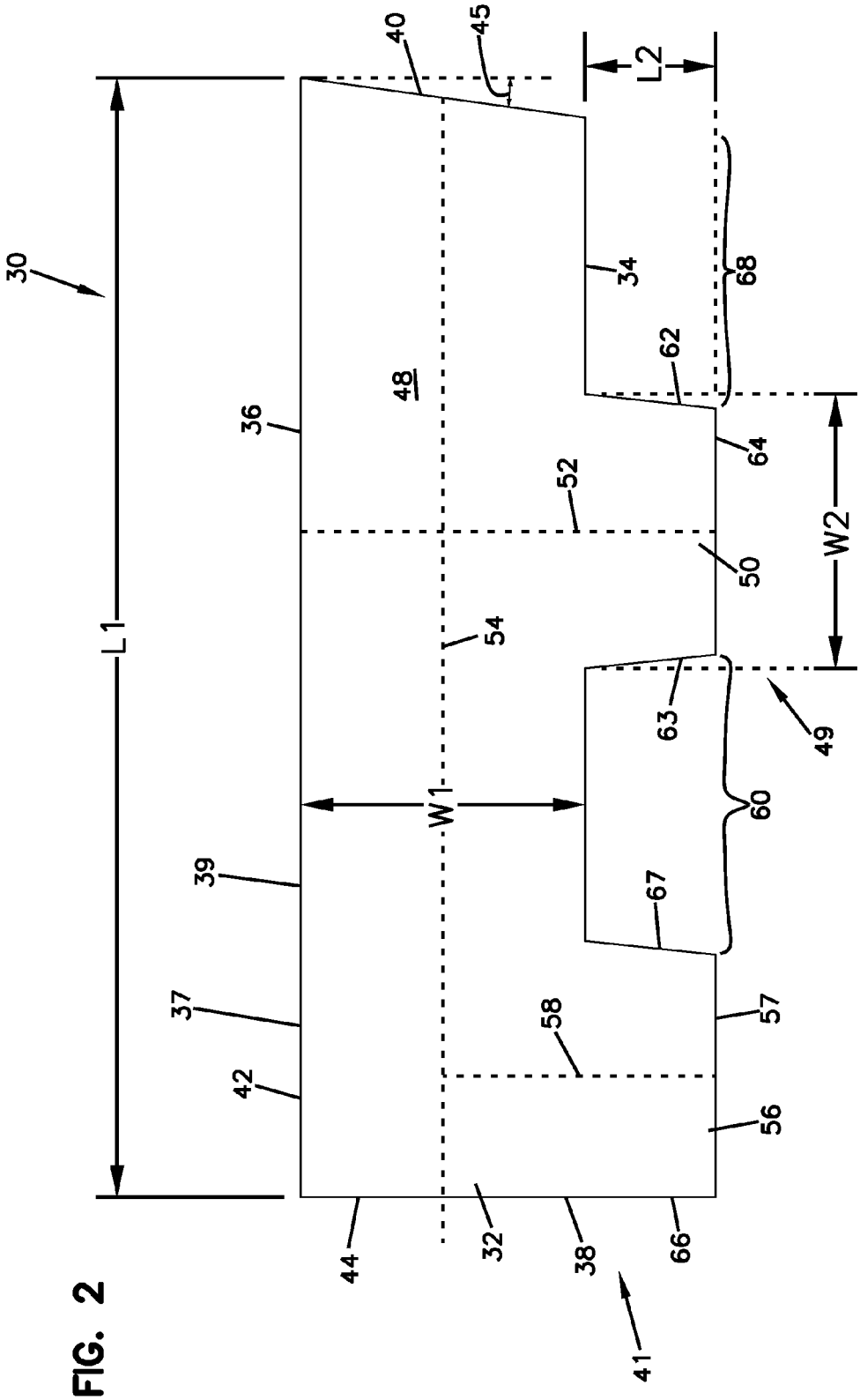
30
40
45
L2
34
68
62
48
36
64
52
50
W2
L1
54
63
49
W1
60
39
67
37
58
57
42
56
44
32
38
66
41

FIG. 2

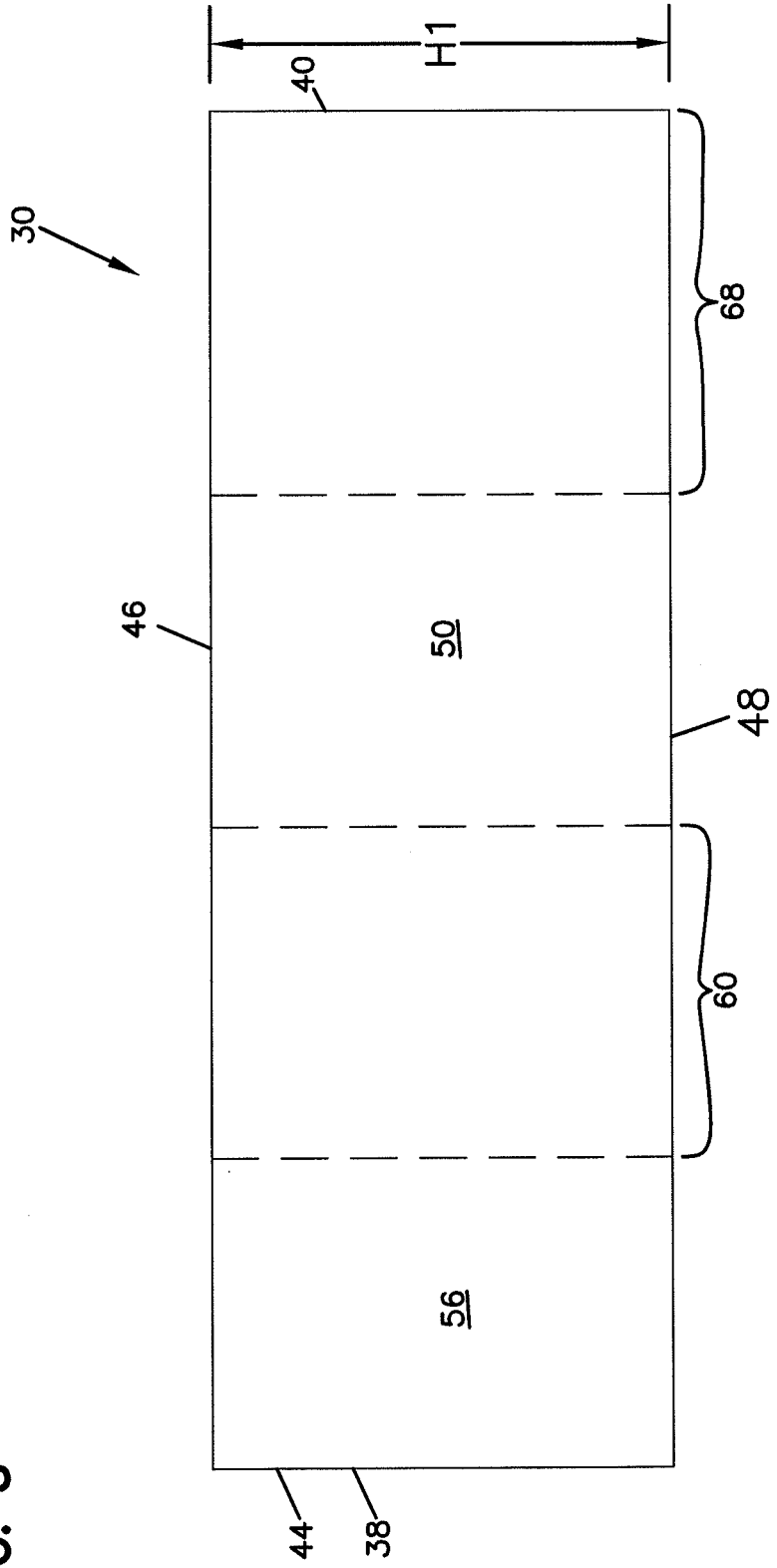

FIG. 3

FIG. 4

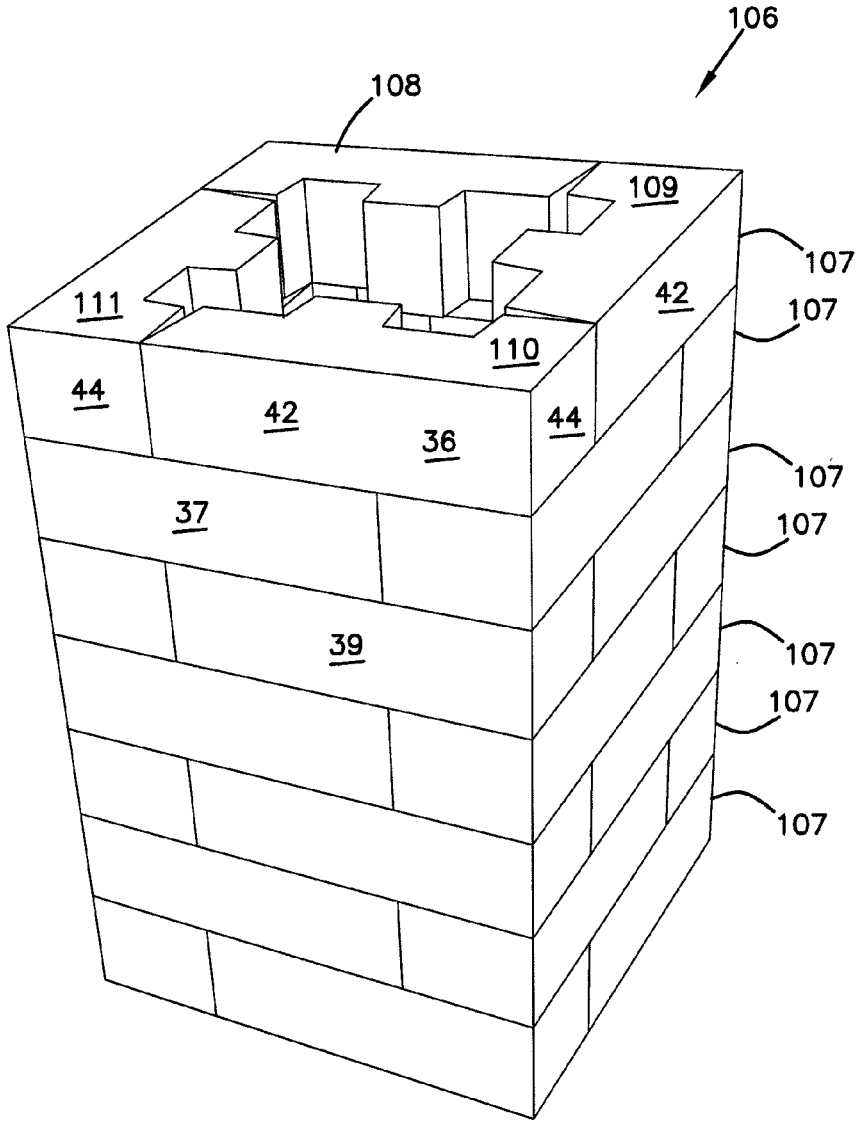
106
108
109
107
107
111
42
110
44
42
36
44
107
37
107
39
107
107
107

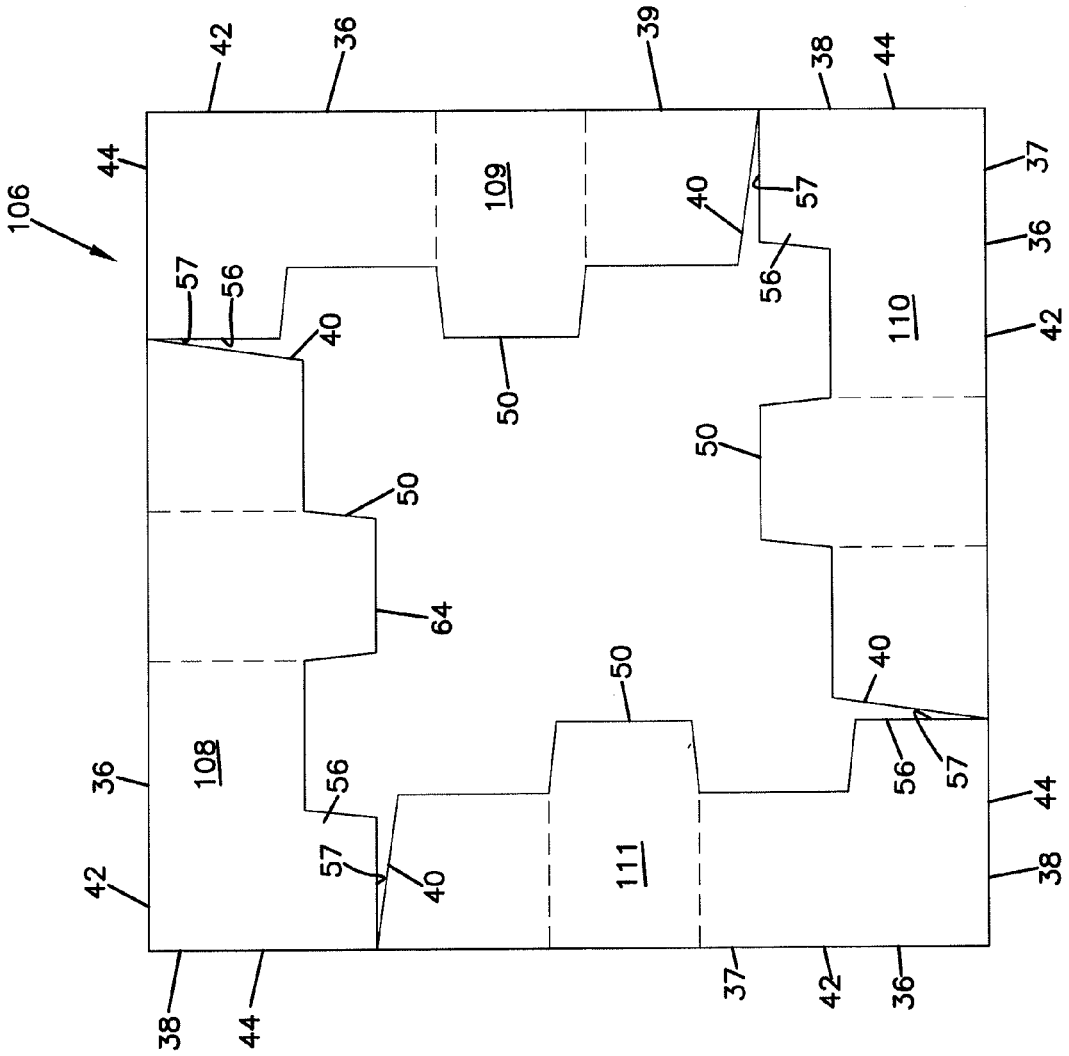

FIG. 5

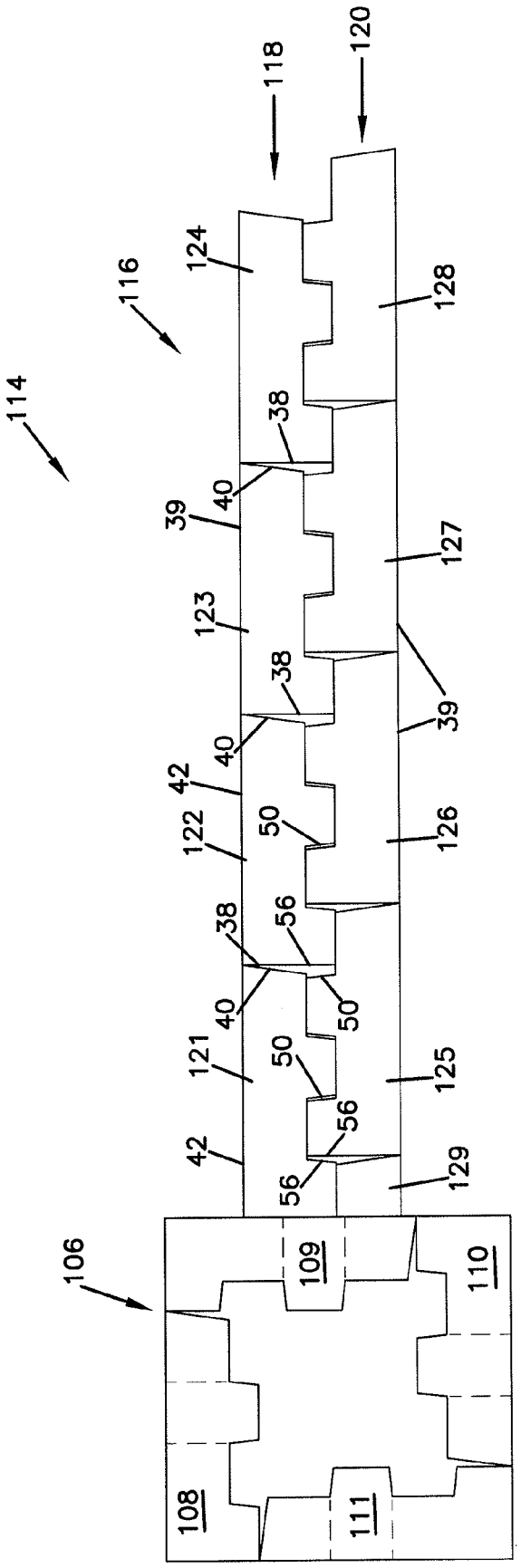
114
116
118
120
124
128
38
40
39
127
123
38
40
39
42
50
122
126
38
56
40
50
121
50
125
56
42
56
129
106
109
110
108
111

FIG. 6

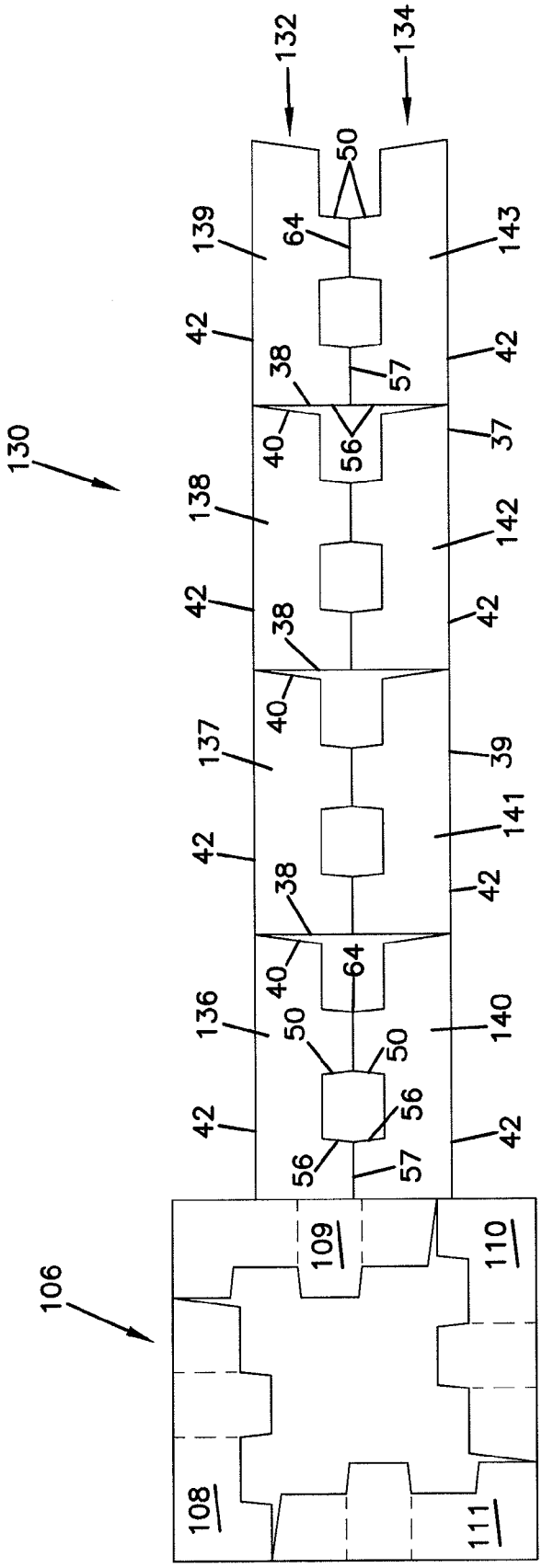
130
132
134
106
108
109
110
111
136
137
138
139
140
141
142
143
37
38
39
40
42
50
56
57
64

FIG. 7

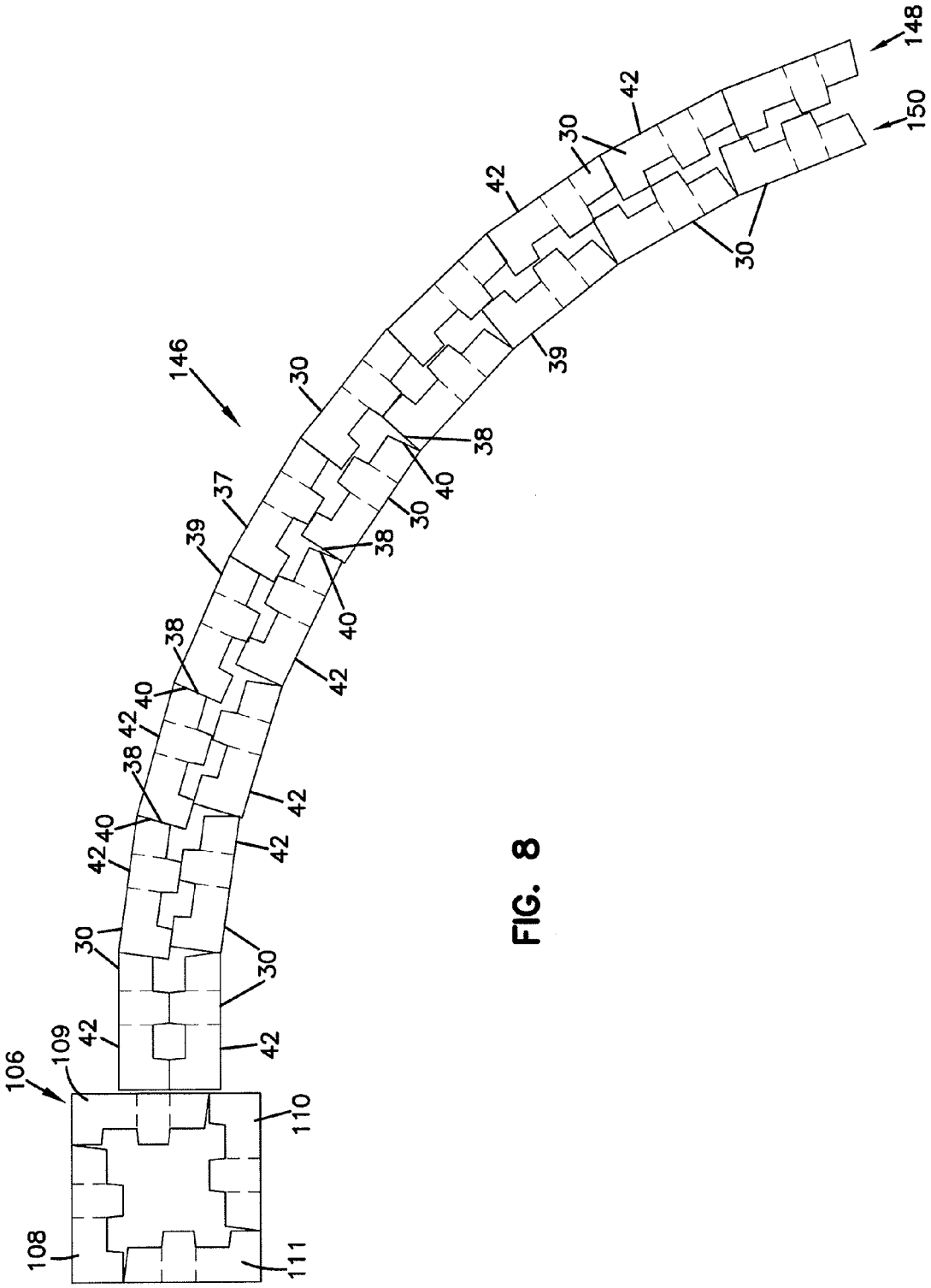

FIG. 8

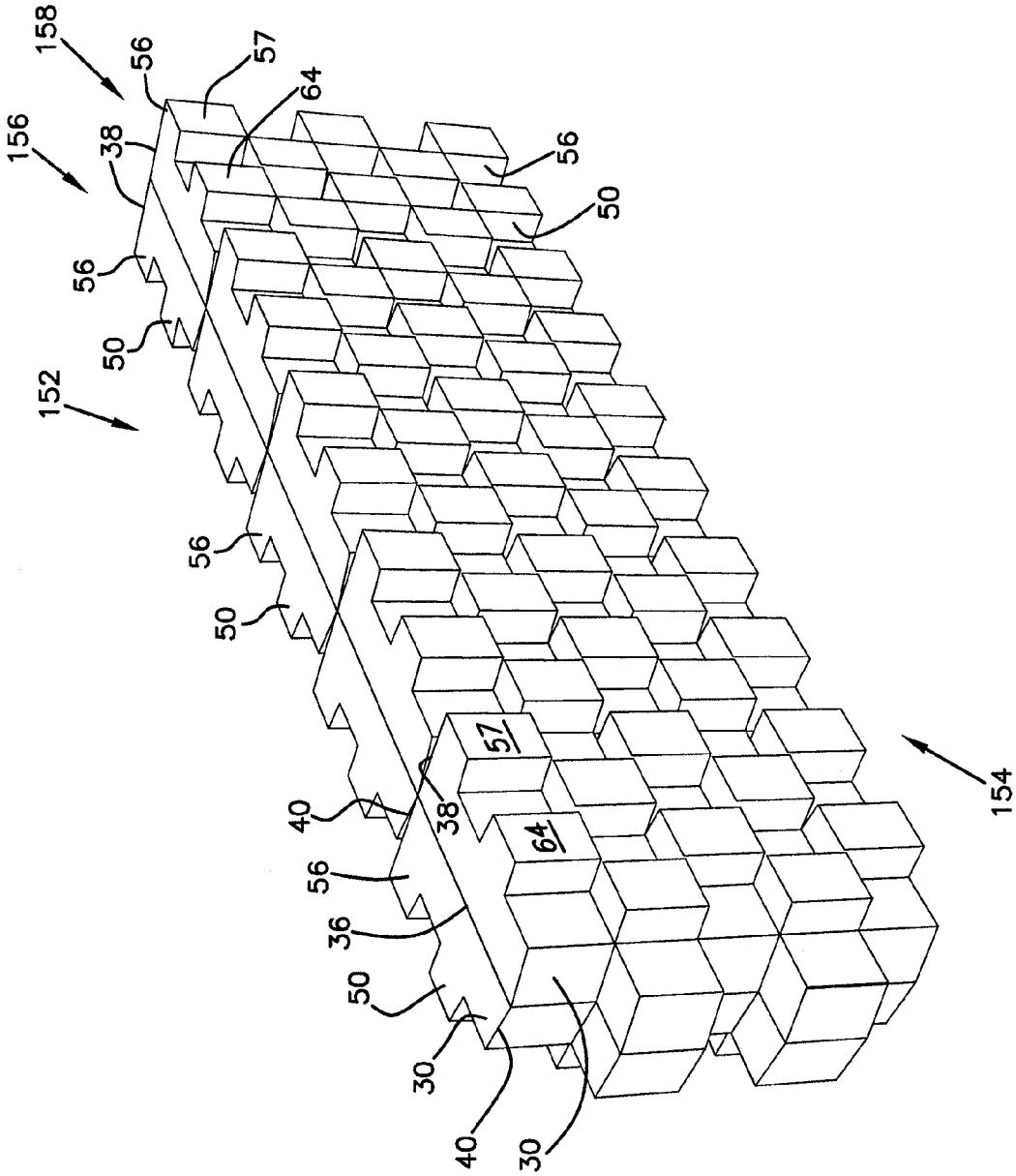

FIG. 9

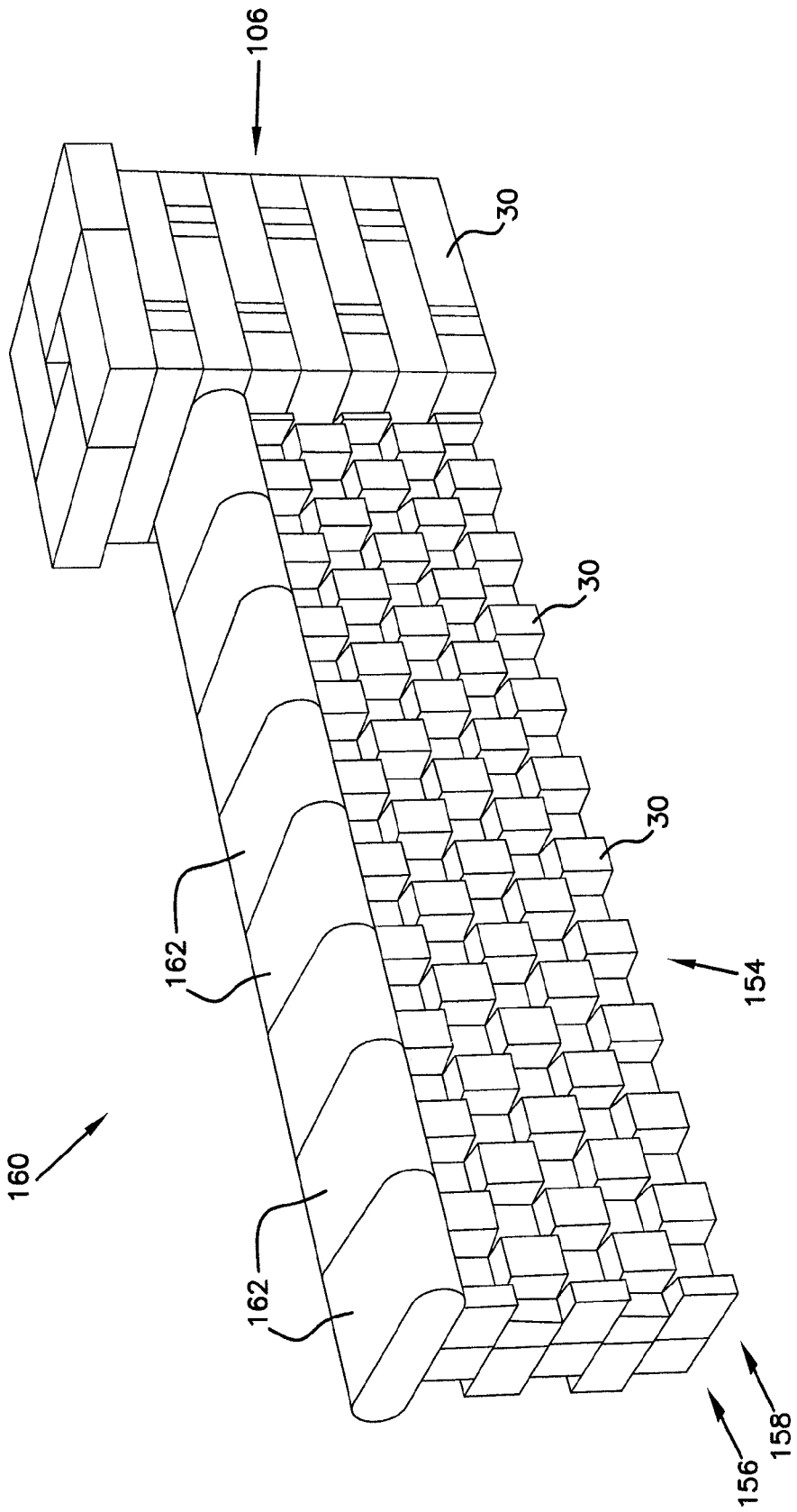

FIG. 10

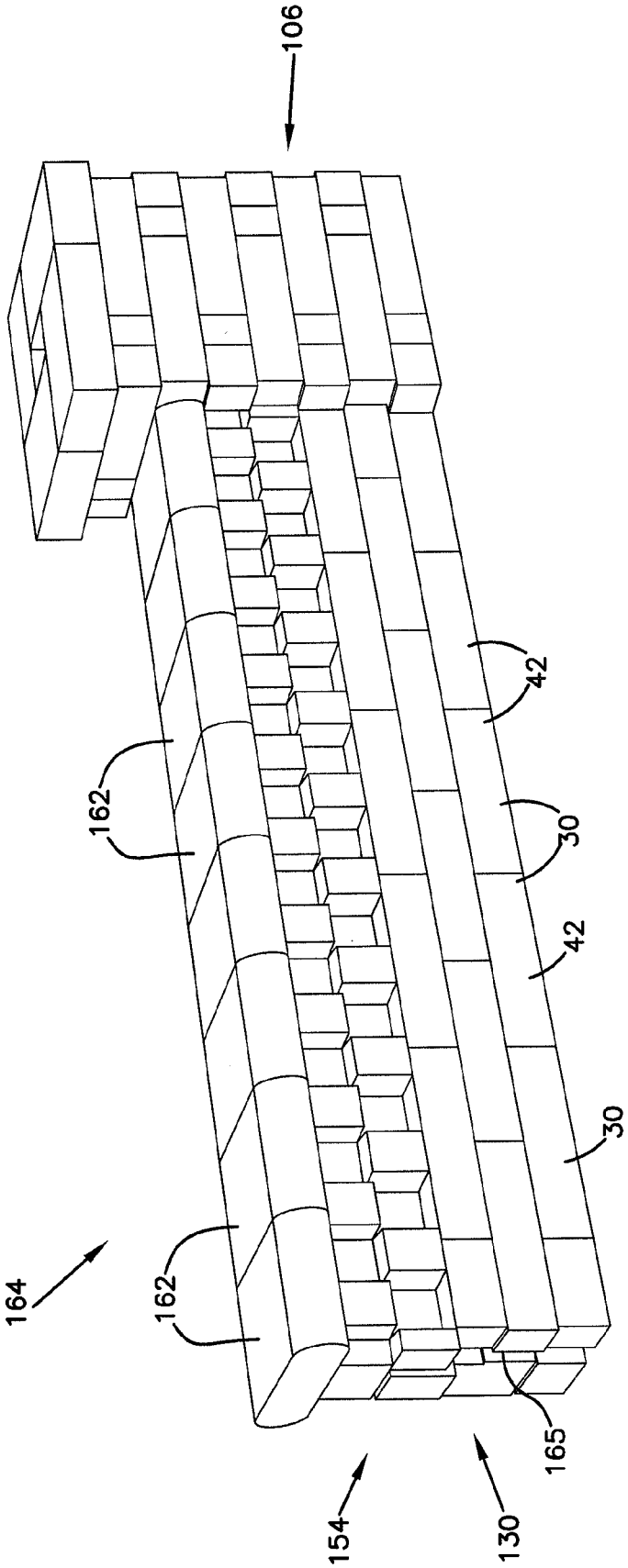

FIG. 11

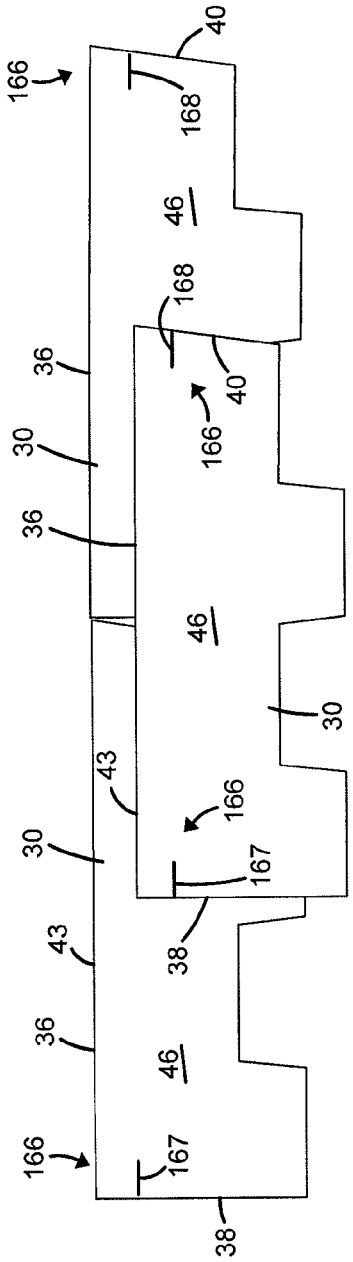
166
40
168
46
168
36
40
166
30
36
46
30
43
166
167
30
38
43
36
46
166
167
38

FIG. 12

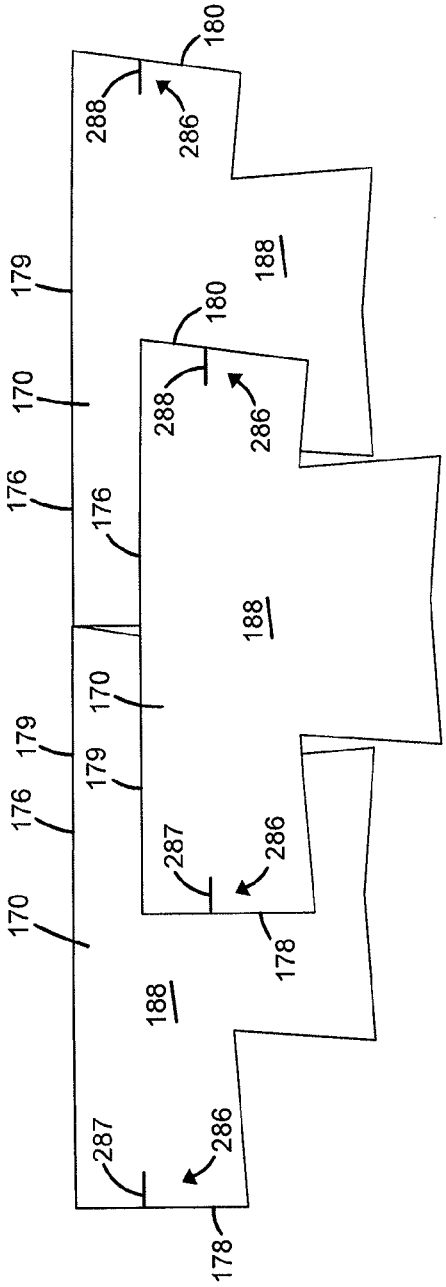
180
288
286
179
188
180
170
288
286
176
176
188
170
179
179
176
287
286
170
178
188
287
286
178

FIG. 20

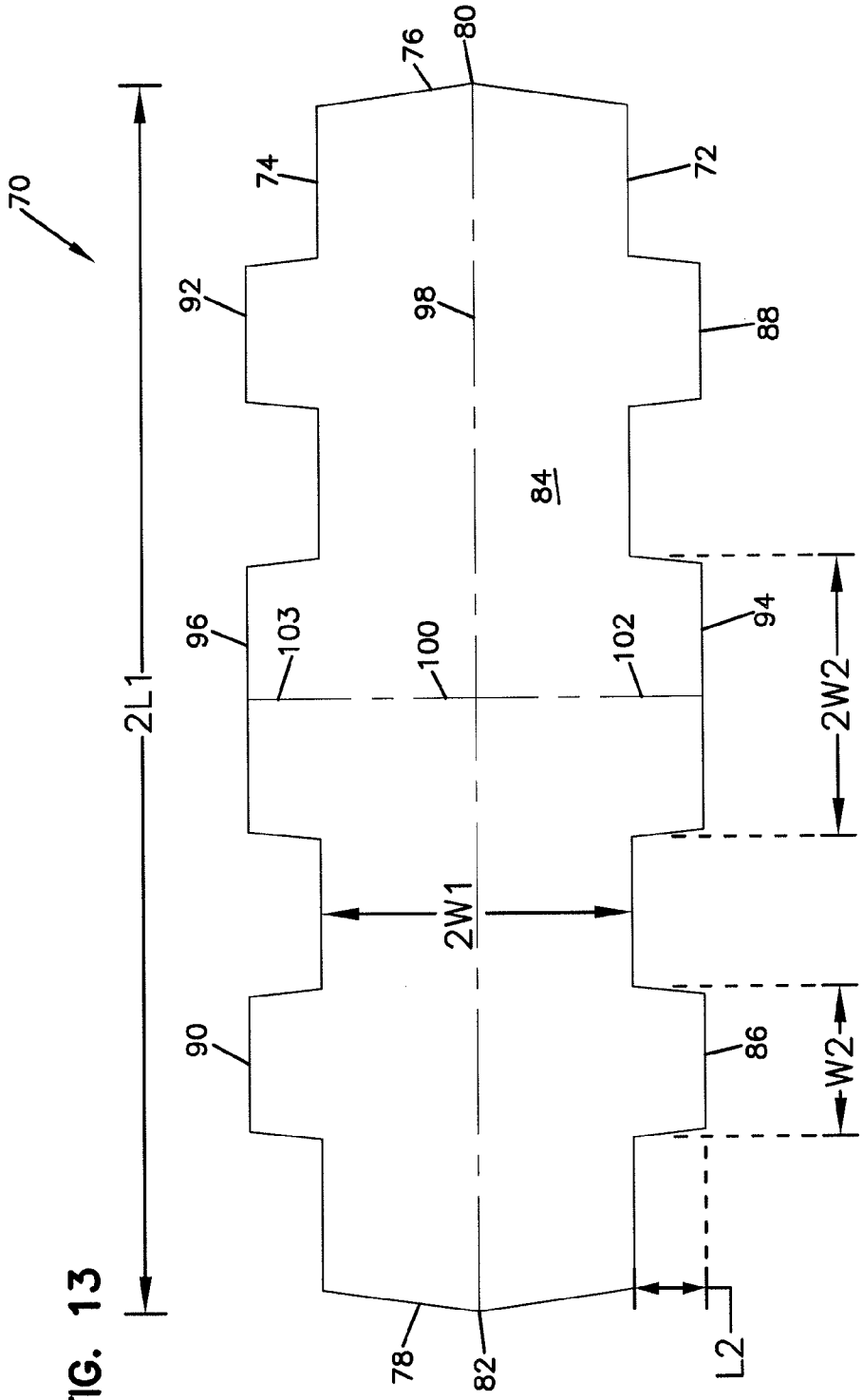
70
2L1
76
80
74
72
92
98
88
84
96
103
100
102
94
2W2
2W1
90
86
W2
78
82
L2

FIG. 13

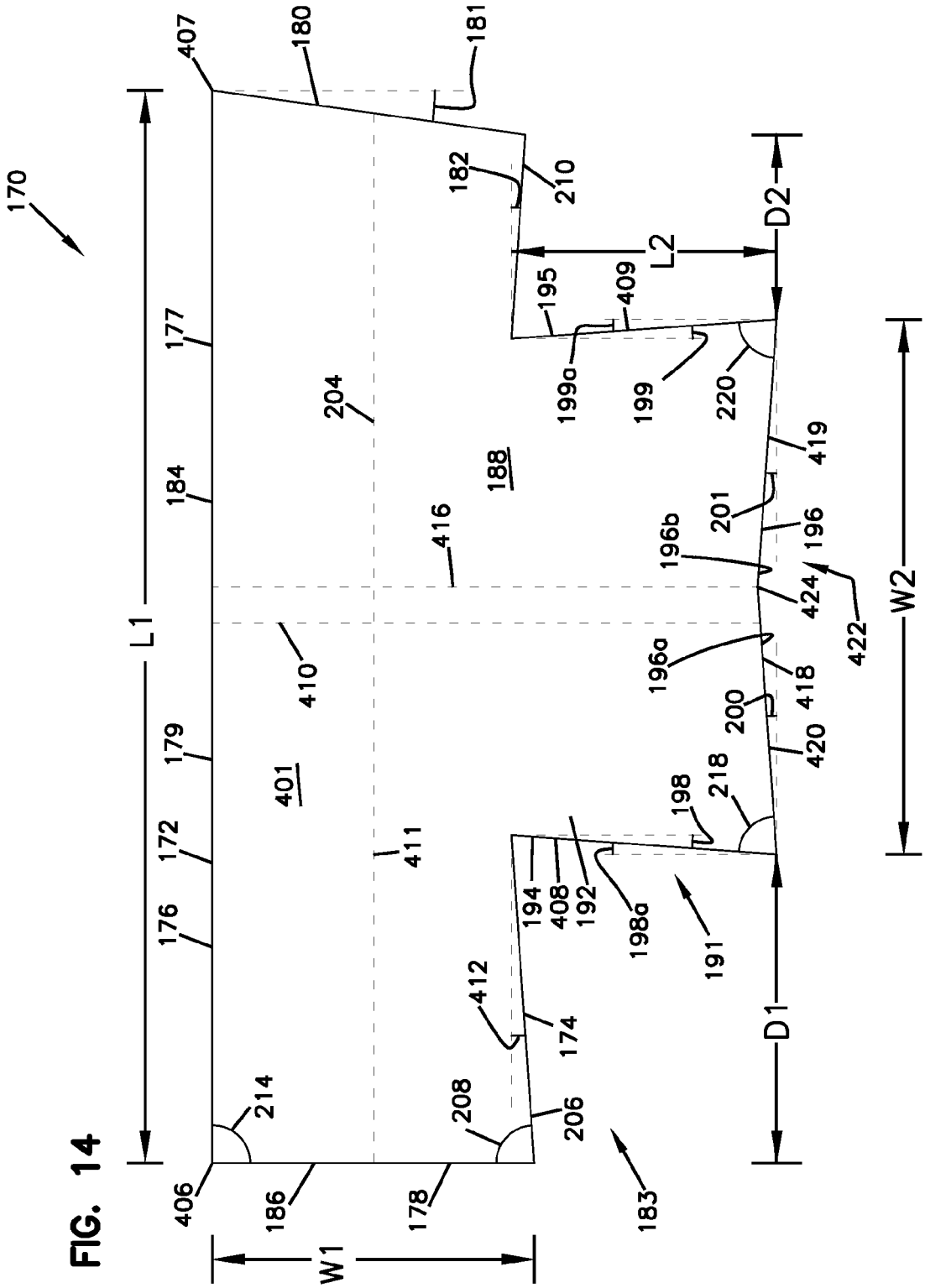
170
407
180
181
182
210
D2
L2
195
409
199a
199
220
177
204
188
419
184
201
196
416
196b
424
422
W2
L1
410
196a
418
200
420
179
401
218
198
172
411
194
408
192
198a
191
176
412
174
D1
214
208
206
406
186
178
183
W1

FIG. 14

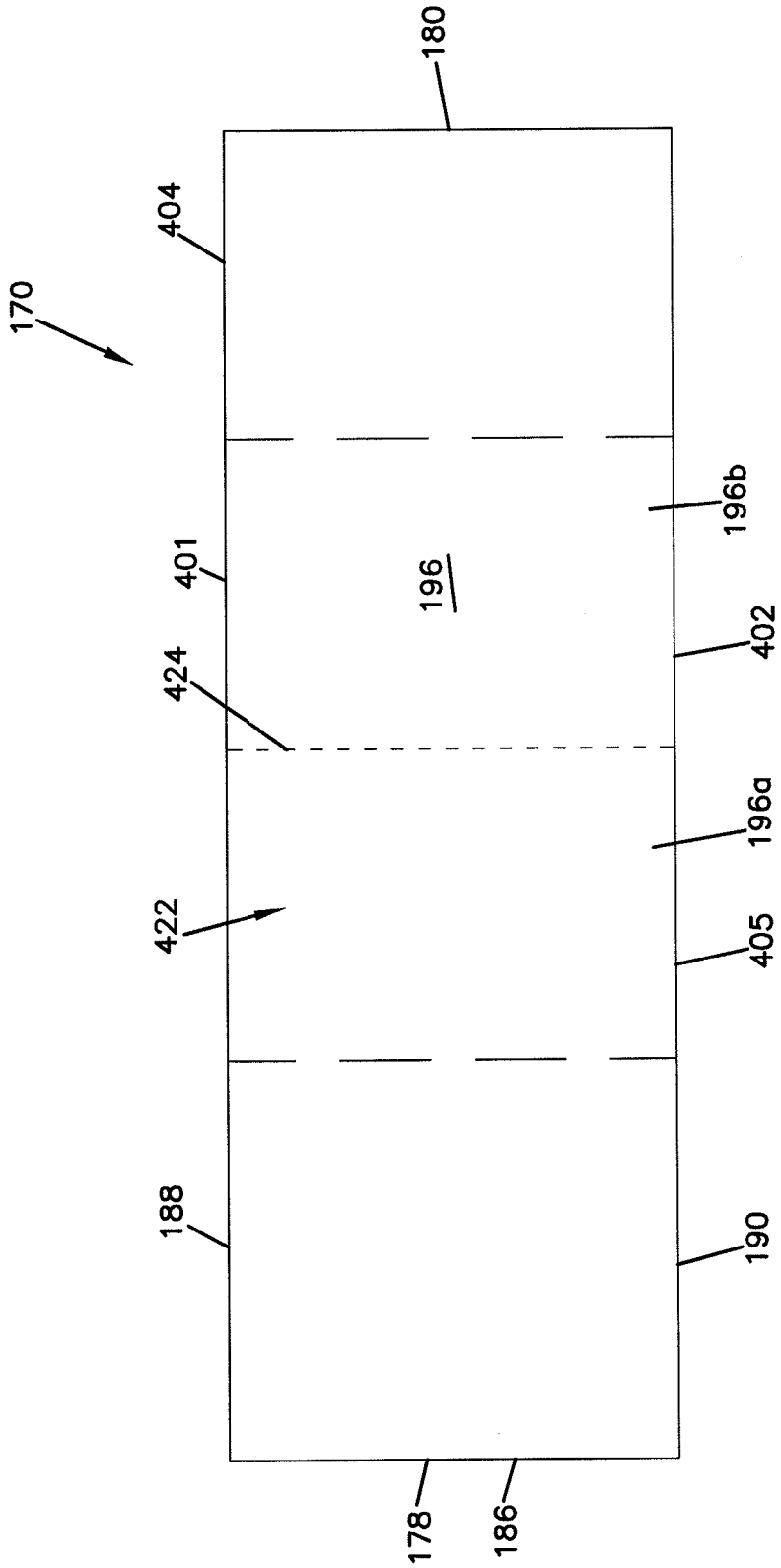

FIG. 15

FIG. 16

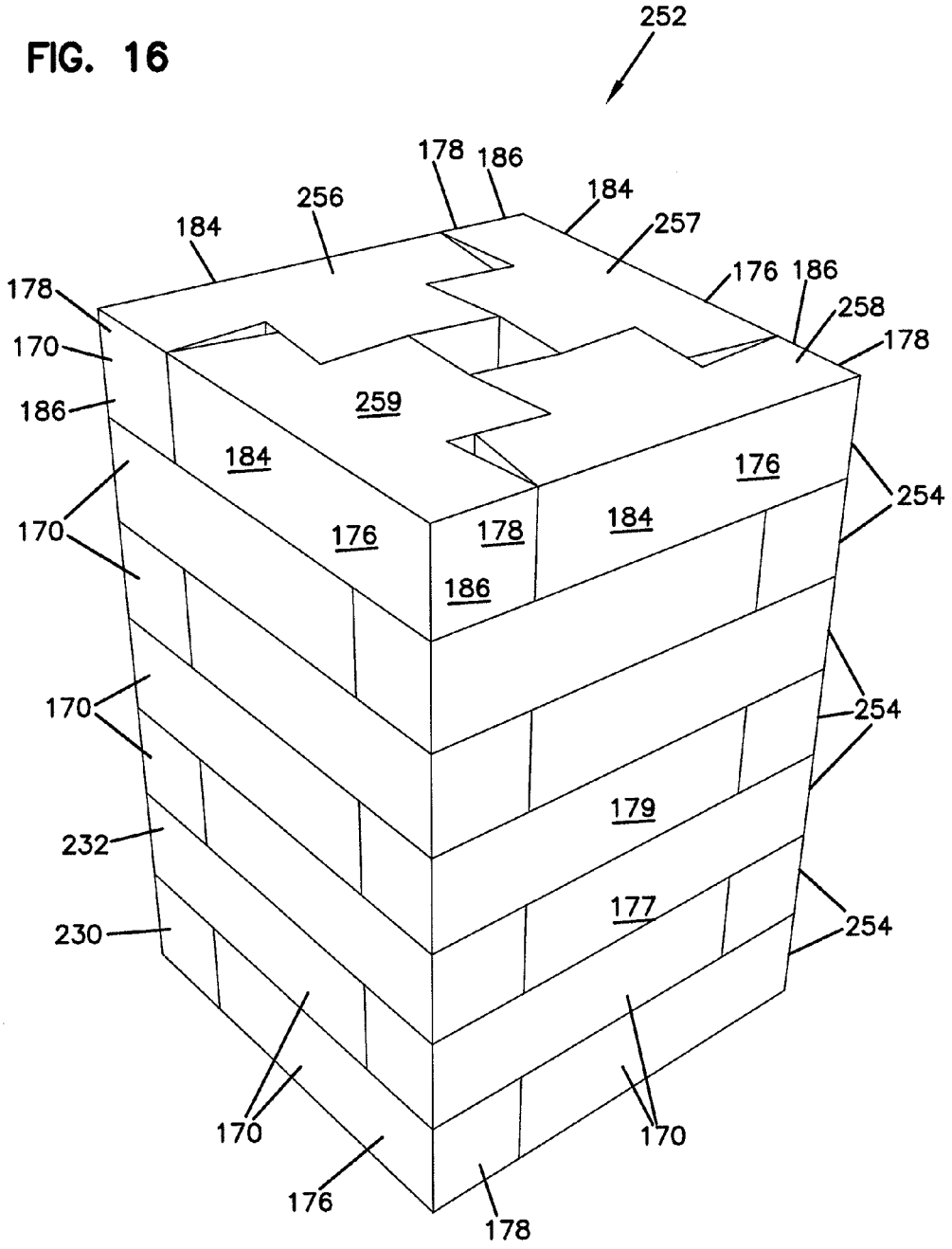
252
178
186
184
256
184
257
176
186
178
258
178
170
186
259
184
176
254
170
176
178
184
186
170
254
179
232
177
230
254
170
170
176
178

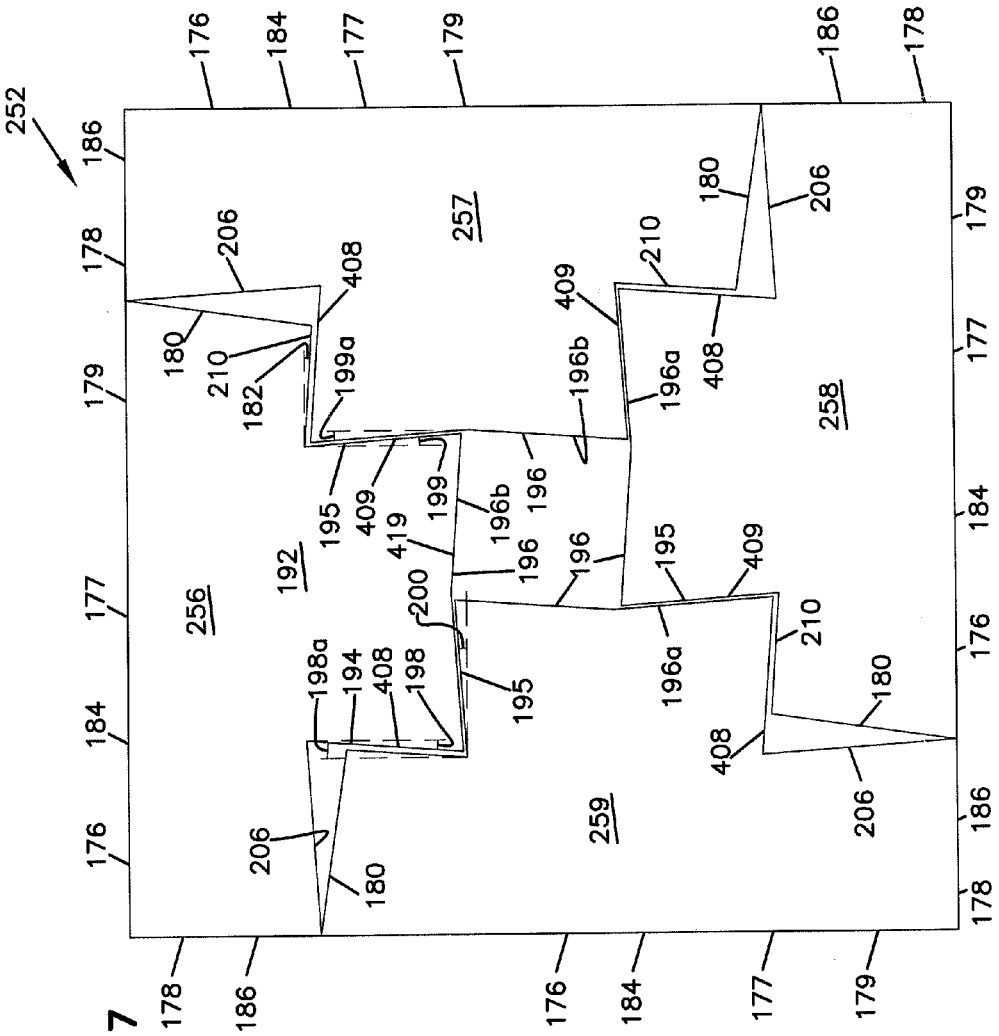
252
176
184
177
179
186
178
257
258
256
259
192
206
180
210
182
408
409
199a
196b
196a
195
199
196
419
200
198a
194
198

FIG. 17

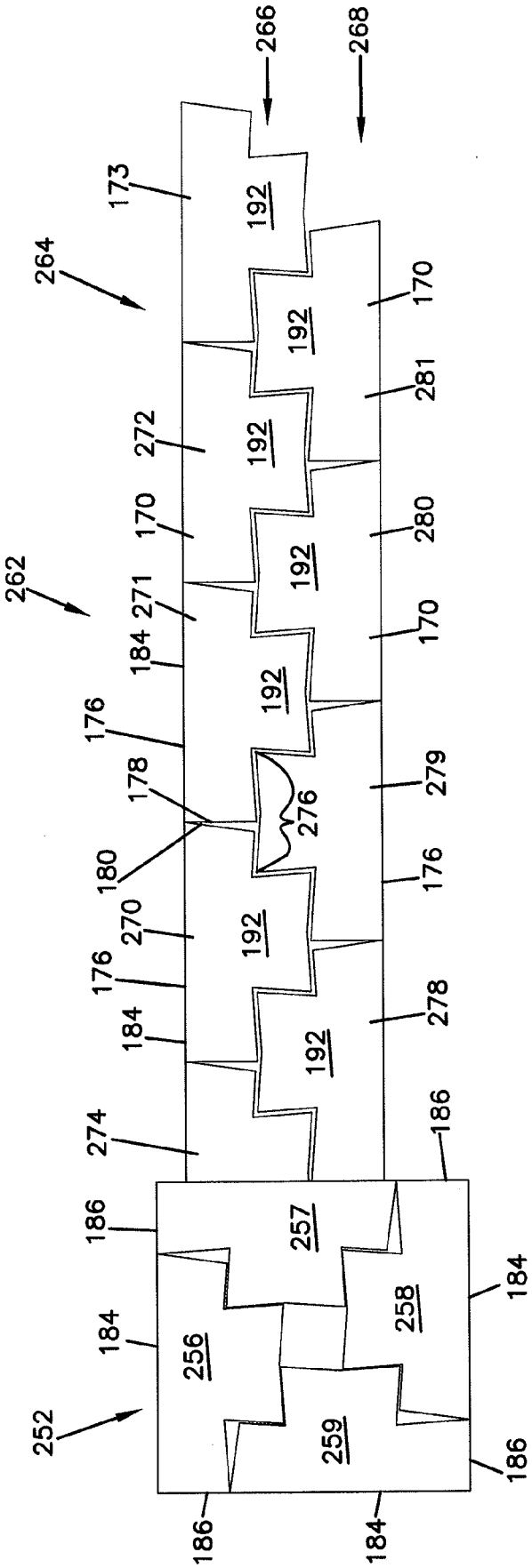
266
268
173
264
192
170
281
272
280
262
271
184
176
178
276
279
180
270
278
274
186
257
258
256
259
252

FIG. 18

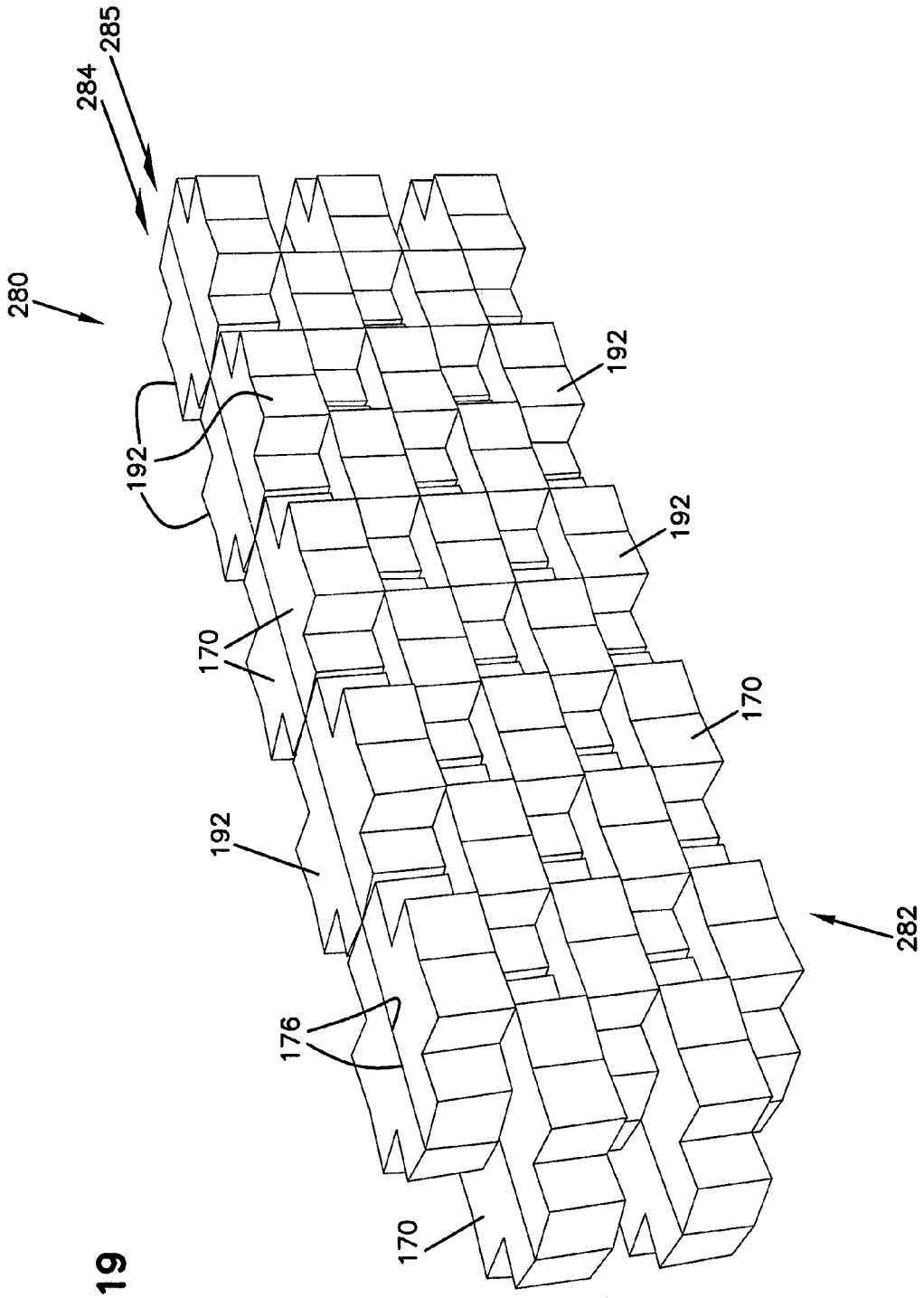

FIG. 19

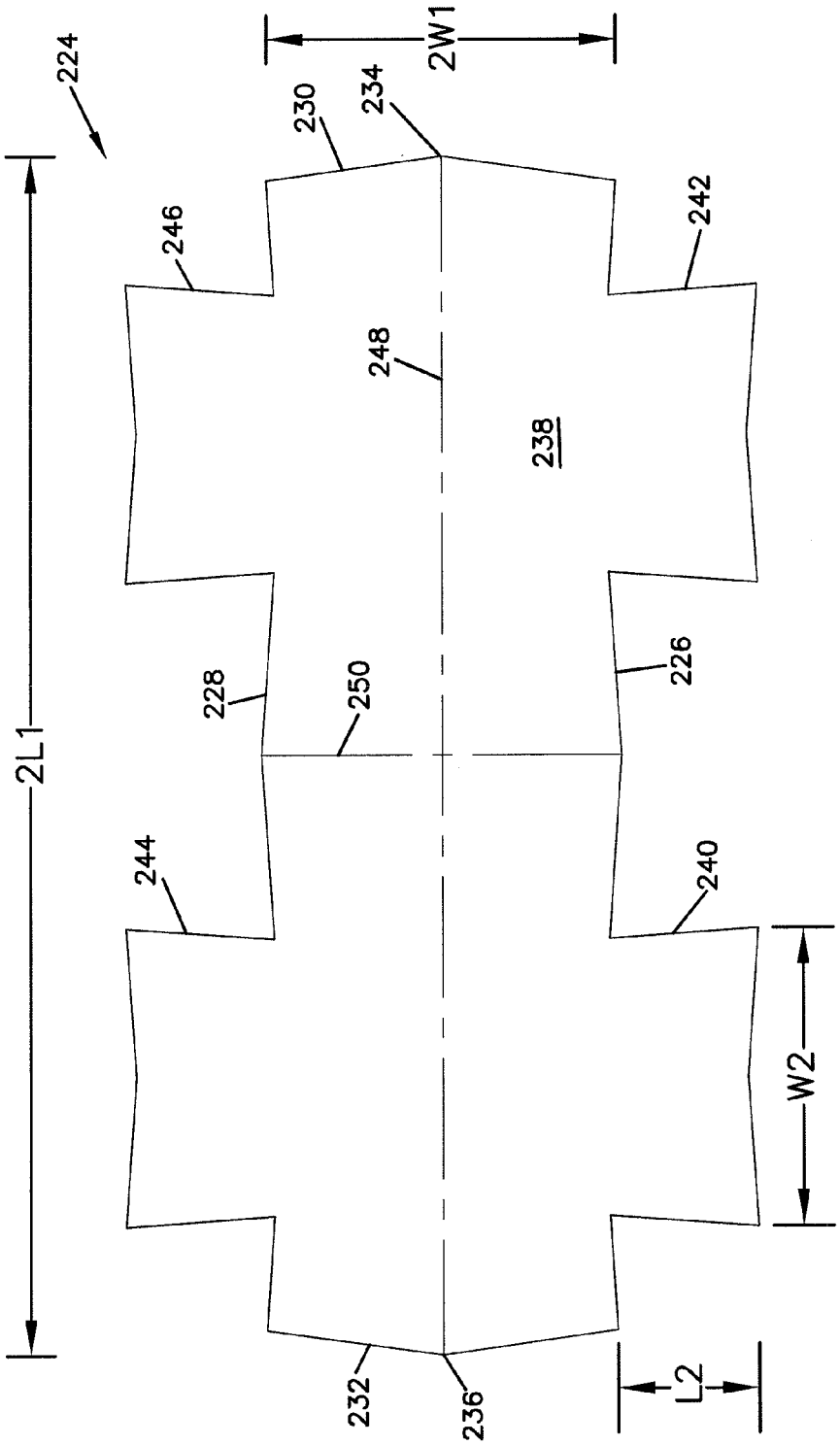
224
2L1
2W1
230
234
246
242
248
238
228
250
226
244
240
W2
232
236
L2

FIG. 21

MULTI-USE BUILDING BLOCK AND METHODS

This application is a National Stage Application of PCT/US2014/037874, filed May 13, 2014, which claims priority under 35 USC §119(e) to U.S. provisional patent application 61/823,650 filed May 15, 2013, and which applications are incorporated herein by reference. A claim of priority is made to each of the above disclosed applications.

TECHNICAL FIELD

This disclosure relates to modular units that can be used in many different ways, including, for example, to build landscaping walls, which may include retaining walls that present one exposed face, or freestanding walls that present two exposed faces. The units disclosed can also be used to build columns and at-grade or above-grade edging strips. The modular units can be used in other applications, such as furniture. This disclosure also relates to methods for making the units and methods for using them.

BACKGROUND

Modular units can be used to build a variety of structures. For example, modular concrete units have been used to build walls for more than a hundred years. In recent years, concrete units have been specifically designed for use in building mortarless landscaping walls (in particular retaining walls that present one exposed face, or freestanding walls that present two, opposed, exposed faces). These units frequently include some form of locator arrangement to assist the installer in achieving the proper orientation of the blocks, and to help to brace the structure against earth pressure, wind pressure, and the like. In the DIY arena in particular, there is a need for simple to use landscape wall—building units. Most of the DIY units that are in use today are sold through retail home center outlets, where shelf space is at a premium and, therefore, managing the number of SKU's (stock keeping units) that are carried in the store is a significant factor.

Modular units can be used in other capacities, such as for furniture including, for example, book shelves, stands, pedestals, etc.

Accordingly, there is a demand for easy-to-use modular units. The modular units can be for a variety of applications. Among the applications include, for example, landscape wall-building blocks that can perform multiple landscape wall and edging functions, and that provide the ornamental features that are important in that arena.

SUMMARY

A multi-use building block is provided. The multi-use block includes an elongate body having a length L**1** and a width W**1**. At least a first leg extends from a first side of the body with its center line perpendicular to the center line of the body. Each leg has a width W**2** parallel to the length L**1** of the body and a length L**2** perpendicular to the length L**1** of the body. Like blocks can be placed in different orientations with respect to each other to form multiple interlocking structures.

In another aspect, a method of making a multi-use concrete building block is provided. The method includes providing an elongate, pre-split body having a length **2**L**1** and a width **2**W**1**. At least a first and second leg extends from a first side of the pre-split body with their center lines perpendicular to the center line of the pre-split body. Each leg has a width W**2** parallel to the length **2**L**1** of the pre-split body and a length L**2** perpendicular to the length **2**L**1** of the pre-split body. At least a first and a second leg extend from a second side of the pre-split body opposite of the first side, with their center lines perpendicular to the center line of the pre-split body. Each leg has a width W**2** parallel to the length **2**L**1** of the pre-split body and a length L**2** perpendicular to the length **2**L**1** of the pre-split body. The upper and lower faces of the pre-split body are planar and parallel to each other. The method includes splitting the pre-split body along the width and along the length to result in four multi-use blocks, with each block having a body with a length L**1** and width W**1**, a first split face, a second split face generally perpendicular to the first split face, and at least one leg extending from a side of the body opposite of the first split face, the leg having a width W**2** parallel to the length L**1** of the body and a length L**2** perpendicular to the length L**1** of the body, so that when two of the blocks are placed end-to-end with their legs on the same side, a space is created between the adjacent legs of the two blocks for receiving the leg of a third like block.

In another aspect, a method of using a multi-use building block is provided. The method includes providing a first, second, and third multi-use block. Each of the blocks includes an elongate, body having a length L**1** and a width W**1**, at least a first leg extending from a first side of the body with its center line perpendicular to the center line of the body, each leg having a width W**2** parallel to the length L**1** of the body and a length L**2** perpendicular to the length L**1** of the body. The upper and lower faces of the block are planar and parallel to each other. The method includes placing the first block and second block end-to-end with their legs on the same side to form a space between the legs. The method includes orienting the third block to face the first block and second block to place the leg of the third block in the space formed between the adjacent legs of the first block and second block.

In another aspect, a building block is provided comprising: an elongate body having opposite first and second sides, opposite first and second end faces extending between the first and second sides, and opposite first and second bearing faces extending between the first and second sides and the first and second end faces; the first bearing face being an upper face in use; the first bearing face having a contact surface portion that is generally planar; the second bearing face having a contact surface portion that is generally planar; the contact surface portion of the first bearing face and the contact surface portion of the second bearing face being generally parallel to each other.

The first side of the body defines a leg; the first side of the body having a first leg side, an opposite second leg side, and a leg end face extending between the first leg side and second leg side; the first side of the body having a first portion extending between the first end face and the first leg side; the first portion being angled at a first extension angle away from the second side of the body, as the first portion extends from the first leg side to the first end face, the first extension angle being non-zero; the first side of the body having a second portion extending between the second end face and the second leg side; the second portion being angled at a second extension angle away from the second side of the body, as the second portion extends from the second leg side to the second end face, the second extension angle being non-zero.

The leg has a center plane that is generally orthogonal to the first and second bearing surfaces, the center plane

bisecting the leg; the first leg side diverging from the second leg side as the first leg side extends away from the first portion of the first side of the body; the first leg side extending away from the first portion at a third extension angle relative to the center plane, the third extension angle being non-zero; the second leg side diverging from the first leg side as the second leg side extends away from the second portion of the first side of the body; the second leg side extending away from the second portion at a fourth extension angle, the fourth extension angle being non-zero.

The leg end face has a first leg end face section and second leg end face section; the first leg end face section being angled inwardly at a fifth extension angle relative to a plane orthogonal to the leg center plane, the first leg end face section extending to about the leg center plane in extension from the first leg side; and the second leg end face section being angled inwardly at a sixth extension angle relative to the plane orthogonal to the leg center plane, the second leg end face section extending to about the leg center plane in extension from the second leg side.

In one aspect, at least the second extension angle, third extension angle, fourth extension angle, and fifth extension angle each are within plus or minus five degrees are each other.

In one aspect, at least the one of the second extension angle, third extension angle, fourth extension angle, and fifth extension angle is within plus or minus 3 degrees of at least one or more of the other of the second extension angle, third extension angle, fourth extension angle, and fifth extension angle.

In one aspect, the second extension angle, third extension angle, fourth extension angle, and fifth extension angle are each within plus or minus 1 degree of each other.

The block can be made of dry cast concrete and the second side of the body can be a split face.

The first end face of the body can be a split face.

The second end face can be angled at a non-zero angle in a direction toward the first end face, as the second end face extends from the second side of the body to the first side of the body.

In one or more embodiments, the first extension angle, second extension angle, third extension angle, fourth extension angle, fifth extension angle and sixth extension angle are each less than 10 degrees.

The first extension angle and sixth extension angle each can be within +/−5 degrees of each of the second extension angle, third extension angle, fourth extension angle, and fifth extension angle.

Any one or all of the first extension angle, second extension angle, third extension angle, fourth extension angle, fifth extension angle and sixth extension angle can be within +/−1 degree of each other.

In some embodiments, at least the second extension angle, third extension angle, fourth extension angle, and fifth extension angle can be within +/−1 degree of each other.

In another aspect, a free standing wall is provided comprising: a plurality of blocks that can be constructed as variously characterized above arranged in multiple courses; each course comprising the blocks being in two rows, with the blocks in each row laid end to end with the second side of each block forming a portion of an exposed face of the wall, and the leg of each block in a first of the rows being between adjacent legs of two blocks in a second of the rows.

In another aspect, a column is provided comprising: a plurality of the blocks as variously characterized above arranged in multiple courses; each course comprising four of the blocks arranged in a rectangle with the second side of each block and an end of an adjacent block forming a side of the column.

The leg end face of each block can be angled to match an angle of one of the first or second leg sides of an adjacent block, whereby the blocks are locked together to resist lateral movement of each of the blocks in the course.

In one or more embodiments, the blocks in a course of blocks are rotated 90 degrees around the vertical axis of the column from the blocks in an adjacent course.

The second side of one of the blocks, and the first end face of an adjacent block, each may have a split face and form a side of the column.

In another aspect, a building block is provided comprising: a body having opposite first and second sides, opposite first and second end faces extending between the first and second sides, and opposite first and second bearing faces extending between the first and second sides and the first and second end faces; the first bearing face being an upper face in use; the first bearing face having a contact surface portion that is generally planar; the second bearing face having a contact surface portion that is generally planar; the contact surface portion of the first bearing face and the contact surface portion of the second bearing face being generally parallel to each other; the first side of the body defining a leg; the first side of the body having a first leg side, an opposite second leg side, and a leg end face extending between the first leg side and second leg side; the first side of the body having a first portion extending between the first end face and the first leg side; the first side of the body having a second portion extending between the second end face and the second leg side; the leg being narrower proximal the first portion and second portion of the first side of the body than at the leg end face; and the leg end face defining a recess in complete extension between the first and second bearing faces and extending inwardly toward the second side of the body; the recess extending at least partially between the first leg side and second leg side.

The leg end face recess may extend inwardly at least 90% of an extension between the first leg side and second leg side.

The leg end face recess may extend inwardly at least 95% of an extension between the first leg side and second leg side.

The leg end face recess may extend inwardly at least 98% of an extension between the first leg side and second leg side.

The leg end face recess can be defined by at least a first leg end face section and second leg end face section; at least the first leg end face section can extend inwardly in at least partial extension from the first leg side; or the second leg end face section can extend inwardly in at least partial extension from the second leg side.

At least one of the first leg end face section and second leg end face section can be generally non-curved sections.

At least one of the first leg end face section and second leg end face section can be generally straight sections.

The first leg end face section and second leg end face section may meet at an intersection in the first leg end face.

In one or more embodiments, the intersection of the first leg end face section and second leg end face section is along a region of the leg end face between 45-55% of the leg end face between the first leg side and second leg side.

In one or more embodiments, the intersection of the first leg end face section and second leg end face section is along a region of the leg end face between 48-52% of the leg end face between the first leg side and second leg side.

In one or more embodiments, the first leg end face section extends inwardly in complete extension from the first leg side to the second leg end face section; and the second leg end face section extends inwardly in complete extension from the second leg side to the first leg end face section.

The first leg end face section can be angled toward the second leg end face section from the first leg side at a first extension angle, the first extension angle being non-zero; and the second leg end face section can be angled toward the first leg end face section from the second leg side at an angle about equal to the first extension angle.

The first portion of the first side of the body can be angled at the first extension angle toward the second side as it extends from the first end face to the first leg side.

The second portion of the first side of the body can be angled at the first extension angle toward the second side as it extends from the second end face to the second leg side.

The first portion of the first side of the body can be angled at a non-zero angle toward the second side as it extends from the first end face to the first leg side.

The second portion of the first side of the body can be angled at a non-zero angle toward the second side as it extends from the second end face to the second leg side.

The angle of the first portion and angle of the second portion are about equal, in one or more embodiments.

The leg end face recess can be defined by a first leg end face section and second leg end face section; the first leg end face section can be angled toward the second leg end face section from the first leg side at an angle, the angle being non-zero; and the second leg end face section can be angled toward the first leg end face section from the second leg side at an angle, the angle being non-zero.

In one or more embodiments, the angle of the first leg end face and second leg end face are about equal to the angles of the first portion and second portion.

A distance between the first and second end faces at the second side of the body can be greater than a distance between the first and second end faces at the first side of the body.

The second end face can be angled in a direction toward the first end face, as the second end face extends from the second side of the body to the first side of the body, the angle being non-zero.

The second side of the body can be a split face.

The first end face can be a split face.

In another aspect, a free standing wall is provided comprising: a plurality of blocks as variously characterized above and arranged in multiple courses; each course comprising the blocks being in two rows, with the blocks in each row laid end to end with the second side of each block forming a portion of an exposed face of the wall, and the leg of each block in a first of the rows being between adjacent legs of two blocks in a second of the rows.

In another aspect, a column is provided comprising a plurality of the blocks as variously characterized above and arranged in multiple courses; each course comprising four of the blocks arranged in a rectangle with the second side of each block and an end of an adjacent block forming a side of the column.

The leg end face of each block can be angled to match an angle of one of the first or second leg sides of an adjacent block, whereby the blocks are locked together to resist lateral movement of each of the blocks in the course.

In one or more embodiments, the blocks in a course of blocks are rotated 90 degrees around the vertical axis of the column from the blocks in an adjacent course.

The second side of one of the blocks, and the first end face of an adjacent block each may have a split face and form a side of the column.

In another aspect, a building block is provided comprising a body having opposite first and second sides, opposite first and second end faces extending between the first and second sides, and opposite upper and lower faces extending between the first and second sides and the first and second end faces; the upper and lower faces being generally planar and generally parallel to each other; a leg extending from the first side of the body; the leg having opposite leg sides and an end leg face; the leg sides extending between the first side of the body and the end leg face; the first side of the body having a first portion extending between the first end face and one of the leg sides; the first side of the body having a second portion extending between the second end face and the other of the leg sides; a widest portion of the leg being at the end leg face; and the end leg face including a recessed portion.

The end leg face can have a first section recessed inwardly from one of the leg sides at an angle; and the end leg face can have a second section recessed inwardly from the other of the leg sides at an angle which is the same as the angle of the first section.

The first portion of the first side can angle inwardly as it extends from the first end face to one of the leg sides; and the second portion of the first side can angle inwardly as it extends from the second end face to the other of the leg sides.

The angle of the first portion to the one of the leg sides, and the angle of the second portion to the other of the leg sides can be the same angle as the angle of the first section end leg face and second section end leg face.

The block can be made of dry cast concrete and the second side of the body can be a split face.

The first end face can be a split face.

The body can be longer at the second side than the first side.

The second end face can extend inwardly as it extends from the second side of the body to the first side of the body.

In another aspect, a building block is provided comprising: a body having opposite first and second sides, opposite first and second end faces extending between the first and second sides, and opposite first and second bearing faces extending between the first and second sides and the first and second end faces; the first bearing face being an upper face in use; the second end face being oriented at an acute angle relative to the second side; and the first side of the body defining a leg with a free end extending generally transverse to a remaining portion of the body; the leg being spaced from the first and second end faces of the body; and the leg being narrower at its proximal end than at its distal end, the proximal end being closer to the second side of the body than the distal end, and the distal end defining the free end of the leg.

The block can be made of dry cast concrete and the second side of the body can comprise a split face.

The first end face of the body can comprise a split face.

The first end face of the body can be generally perpendicular to the second side of the body.

The block can be configured and arranged such that when a first and second block, each as variously characterized above, are set next to each other: a portion of the first body end face of the first block is in contact with a portion of the second body end face of the second block; the second sides of the first block and second block extend generally along a common line and point in the same direction; and a gap

results between the legs of the first block and second block forming an opening shaped to accept the leg of a third like-formed block when a third block is oriented with its second side pointed in an opposite direction of the second sides of the first block and second block.

The second side can have a first portion extending from the first end face to the leg, and a second portion extending from the second end face to the leg.

The building block can be configured and arranged such that when a first, second, third, and fourth block, each as variously characterized above, are set next to each other: the first body end face of the second block is generally aligned with, and pointing in generally a same direction as, the second side of the first block; the third block is next to, and in contact with, the second block, with the first body end face of the third block generally aligned with, and pointing in generally a same direction as, the second side of the second block; the fourth block is between, and in contact with, the third block and first block with the first body end face of the fourth block generally aligned with, and pointing in generally a same direction as, the second side of the third block; the first body end face of the first block is generally aligned with, and pointing in generally a same direction as, the second side of the fourth block; and gaps are formed between: (i) respective second portions of the first side of each of the first, second, third, and fourth blocks, and (ii) respective distal ends of the leg of each of the first, second, third, and fourth blocks; each of the gaps being filled by a leg of one of the first, second, third, and fourth blocks.

In another aspect, a building block is provided comprising: a body having opposite first and second sides, opposite first and second end faces extending between the first and second sides, and opposite first and second bearing faces extending between the first and second sides and the first and second end faces; the first bearing face being an upper face in use; the first bearing face having a contact surface portion that is generally planar; the second bearing face having a contact surface portion that is generally planar; the contact surface portion of the first bearing face and the contact surface portion of the second bearing face being generally parallel to each other; the second side having opposite ends; a second side center plane generally orthogonal to the first and second bearing surfaces being in the middle of the opposite ends of the second side; the first side of the body defining a leg; the leg having a leg center plane that is generally orthogonal to the first and second bearing surfaces, the leg center plane bisecting the leg; an outer perimeter of the leg being symmetrical about the leg center plane; the leg center plane being non-coplanar with the second side center plane; and wherein the first bearing face has an outer perimeter shape, and the outer perimeter shape of a non-leg portion of the first bearing face is a non-mirror image relative to the second side center plane.

In any of the above combinations, the block can be concrete.

In any of the above combinations, the block can be dry cast concrete.

In another aspect, a multi-use concrete block is provided including an elongate body having a length L**1** and a width W**1**, at least a first leg extending from a first side of the body with its centerline perpendicular to the centerline of the body, each leg having a width W**2** parallel to the length L**1** of the body and a length L**2** perpendicular to the length L**1** of the body, wherein when two of the blocks are placed end to end with their legs on the same side a space is created between the adjacent legs of the two blocks for receiving the leg of a third like block, the upper and lower faces of the block being planar and parallel to each other. A second leg can extend from the first side of the block, the second leg having the same dimensions as the first leg and also having its centerline perpendicular to the centerline of the body; the second leg being spaced from the first leg to create a space between the legs for receiving one of the legs of a third like block.

A variety of examples of desirable features or methods are set forth in the description that follows.

BRIEF DESCRIPTION OF THE DRAWINGS

FIG. **1** is a perspective view of a first embodiment of a multi-use block, constructed in accordance with the principles of this disclosure;

FIG. **2** is a top view of the block of FIG. **1**;

FIG. **3** is a rear view of the block of FIG. **1**;

FIG. **4** is a perspective view of one embodiment of a column that can be constructed with the block of FIG. **1**;

FIG. **5** is a top view of the column of FIG. **4**;

FIG. **6** is a top view of one embodiment of a column and wall that can be constructed with the block of FIG. **1**;

FIG. **7** is a top view of another embodiment of a column and wall that can be constructed with the block of FIG. **1**;

FIG. **8** is a top view of another embodiment of a column and wall that can be constructed with the block of FIG. **1**;

FIG. **9** is a perspective view of another embodiment of a wall that can be constructed with the block of FIG. **1**;

FIG. **10** is a perspective view of another embodiment of a column and wall that can be constructed with the block of FIG. **1**;

FIG. **11** is a perspective view of another embodiment of a wall and column that can be constructed with the block of FIG. **1**;

FIG. **12** is a top view of three of the blocks of FIG. **1** oriented in a configuration to form a retaining wall having a setback;

FIG. **13** is a top view of one embodiment of a pre-split concrete body used in making the block of FIG. **1**;

FIG. **14** is a top view of another embodiment of a multi-use concrete block, constructed in accordance with the principles of this disclosure;

FIG. **15** is a front view of the block of FIG. **14**;

FIG. **16** is a perspective view of one embodiment of a column that can be constructed with the block of FIG. **14**;

FIG. **17** is a top view of the column of FIG. **16**;

FIG. **18** is a top view of one embodiment of a column and wall that can be constructed with the block of FIG. **14**;

FIG. **19** is a perspective view of one embodiment of a wall that can be constructed with the block of FIG. **14**;

FIG. **20** is a top view of **3** of the blocks of FIG. **14** oriented in a configuration to form a retaining wall having a setback; and

FIG. **21** is a top view of one embodiment of a pre-split concrete body used in making the block of FIG. **14**.

DETAILED DESCRIPTION

A. The First Embodiment, FIGS. **1-13**

(1) The Block, FIGS. **1-3**

FIG. **1** is a perspective view of a first embodiment of a multi-use block **30**, constructed in accordance with the principles of this disclosure. The block **30** is shaped in a way to allow it many varied uses. The block **30** can be made out of a many different materials. When made of concrete, the

block **30** can be used in freestanding walls and columns. The walls and columns can be made in many different ways, some of which are described further below, to result in various aesthetically pleasing walls. The block **30** is made in a way to efficiently utilize materials and manufacturing techniques.

When used as a building block for walls and columns, for example, typically, the block **30** will be molded from dry cast concrete. However, it can be made of wet cast concrete, plastic or other moldable material. The block **30** can be molded, as shown in FIG. **1**, or it can be molded and then subject to manufacturing techniques to result in the block **30** shown in FIG. **1**. Some preferred manufacturing methods will be described further below.

In other arrangements, the block **30**, when utilized in, for example, casual furniture arrangements can be made from non-concrete materials. The non-concrete materials can include, for example, wood or plastic. Example plastics can include thermoset plastics, polystyrene, PVC; or other moldable material.

The block **30** includes a block body **32**. The block body **32** has a length L**1** (FIG. **2**) and width W**1** (FIG. **2**). In general, the body **32** will be elongate, in that the length L**1** will be greater than the width W**1**. The body **32** can be "generally rectangular." As used herein, the term "generally rectangular" can include shapes having 2 pairs of opposite sides that can deviate from being parallel, with the deviations being typically less than about +/−15 degrees.

The block body **32** has a first side **34** and an opposite second side **36**. Between the first side **34** and second side **36** are opposite first and second end faces **38**, **40**. As will be explained further below, in some implementations and when the block body **32** is made from concrete, the second side **36** will also be a first split face **42**, and the first end face **38** will also be a second split face **44**. By the term "split face", it is meant that the faces of the block are created as a result of a splitting process.

In some uses of the block **30**, the second side **36** will be a front section **37** having a front face **39**. In some structures, the front face **39** will be exposed when the block **30** is assembled with like blocks **30** in a structure. The first and second end faces **38**, **40** extend rearwardly from the front face **39**. The block **30** will have a rear section **41** formed integrally with the front section **37**.

The block **30** has an upper face **46** and an opposite lower face **48** (FIG. **2**). In general, the upper face **46** and lower face **48** are planar and parallel to each other. The upper face **46** and lower face **48** include no protrusions or projections or indentations. In this example, the block **30** is free of through-holes or cores.

In FIG. **2**, it can be seen how the second end face **40**, which extends between the second side **36** and the first side **34**, tapers inwardly as the end face **40** extends from the second side **36** to the first side **34**. As used herein, the term "taper(s)" means generally to angle, so to "taper inwardly" means to be angled **25** inwardly. In embodiments where the second side **36** is also the first split face **42**, when the block **30** is made from concrete, the second end face **40** tapers inwardly as the second end face **40** extends from the first split face **42** to the first side **34**. The angle of taper **45** is typically less than 10 degrees.

The block **30** includes at least a first leg portion **49**, which can be part of the rear section **41**. The first leg portion **49** can include a first leg **50**. The first leg **50** extends from the first side **34** of the body **32**. The leg **50** will have a center line **52** that is generally perpendicular to the center line **54** of the body **32**. The leg **50** is generally rectangular.

In FIG. **2**, it can be seen that the first leg **50** has a width W**2**, which is parallel to the length L**1** of the body **32**. The first leg **50** has a length L**2** that is generally perpendicular to the length L**1** of the body **32**.

The block **30** is shaped such that when two of the blocks **30** are placed end-to-end with their respective at least first leg **50** being pointed in the same direction (that is, on the same side), a space is created between the adjacent legs of the two blocks for receiving the generally rectangular leg **50** of a third like block. This is described further below.

Still in reference to FIG. **2**, the block **30** further includes a second generally rectangular leg **56**. The second leg **56** has the same dimensions as the first leg **50**. The second leg **56** also includes a center line **58** that is perpendicular to the center line **54** of the body **32**.

The second leg **56** is spaced from the first leg **50** to create a receiving space **60** between the legs **50**, **56** for receiving one of the generally rectangular legs **50** or **56** of a third like block **30**.

In the embodiment of FIG. **2**, the first leg **50** has a pair of opposite leg sides **62**, **63**. In preferred embodiments, the leg sides **62**, **63** are tapered toward each other as they extend away from the body **32**, terminating at end leg face **64**. The end leg face **64** is generally planar. The angle of the leg sides **62**, **63**, as measured relative to the direction of the length L**2** can be less than 10 degrees, for example, 4-8 degrees.

The second leg **56** has opposite leg sides **66**, **67**. Many embodiments are possible, and in this example, the leg side **67** tapers in a direction toward the other leg side **66**, while the leg side **66** is generally straight as it extends form the body **32**. The leg side **67** can taper at an angle of less than 10 degrees, for example 4-8 degrees.

Still in reference to FIGS. **1** and **2**, the block **30** includes one of the legs **56** being at one end of the body **32**. The first leg **50** is spaced from the second end face **40**. The space between the first leg **50** and second end face **40** forms a receiving space **68** for receiving one of the legs **50**, **56** of a like block **30**.

Many different embodiments of the block **30** can be made. One example block **30** has a length L**1** of 11-12 inches, for example about 11.8 inches. It has a width W**1** of about 2.5-3.5 inches, for example about 3 inches. The leg width W**2** is about 2-3 inches, for example about 2.6 inches. The receiving spaces **60**, **68** will be 2-3 inches, for example about 2.8-2.9 inches. The height H**1** (FIG. **3**) will be about 3.5-4.5 inches, for example 4 inches.

(2) Method of Making the Block of FIGS. **1** and **2**, FIG. **13**

Before turning to various freestanding walls, columns, and other structures that can be made from the block **30**, attention is directed to FIG. **13**, which illustrates one example method of making the block **30**.

In FIG. **13**, a pre-split body **70** is illustrated. The pre-split body **70** can be made by molding dry cast concrete. The pre-split body **70** has a length 2L**1** and a width 2W**1** and can be generally rectangular.

The pre-split body **70** includes a first side **72** and an opposite second side **74**. Extending between the first side **72** and second side **74** are opposite first and second end walls **76**, **78**.

In the example shown in FIG. **13**, the first end wall **76** tapers from a center **80** inwardly as the end wall **76** extends from the center **80** to each of the first side **72** and second side

74. Similarly, the second end wall **78** tapers inwardly as it extends from a center **82** to the first side **72** and second side **74**.

The pre-split body **70** will have a generally planar upper face **84** and lower face. The upper face **84** and lower face will be generally parallel to each other. The pre-split body **70** can be free of through-holes or cores.

Still in reference to FIG. **13**, at least a first leg **86** and second leg **88** extend from the first side **72** of the pre-split body **70**. Each of the legs **86**, **88** has a width W**2** parallel to the length 2L**1** of the pre-split body **70**, and a length L**2** perpendicular to the length 2L**1** of the pre-split body **70**. The legs **86**, **88** are generally rectangular.

The pre-split body **70** further includes at least a first leg **90** and a second leg **92** extending from the second side **74** of the pre-split body **70**. The first leg **90** and second leg **92** will generally be the same size as the first leg **86** and second leg **88**, and have their center lines perpendicular to the center line of the pre-split body **70**. The legs **90**, **92** can be generally rectangular.

The pre-split body **70** also includes a third leg **94** extending from the first side **72** and a third leg **96** extending from the second side **74**. In FIG. **13**, the third leg **94** is between and spaced from the first leg **86** and second leg **88**. The third leg **96** is between and spaced from the first leg **90** and second leg **92**. The third legs **94**, **96** have center lines perpendicular to the center line of the pre-split body **70**. The third legs **94**, **96** have a width of twice the width of the first and second legs **86**, **88**, **90**, **92**, which is a width of 2W**2**. The third legs **94**, **96** are generally rectangular.

To make the block of FIG. **1**, the method includes splitting the concrete pre-split body **70** along the length at splitting line **98** and along the width at splitting line **100** to result in four multi-use blocks **30**. The resulting four multi-use blocks **30** will each have a body **32** with length L**1** and width W**1**, first split face **42**, created along the splitting line **98** and second split face **44** created along the splitting line **100**. The second split face **44** will be generally perpendicular to the first split face **42**.

The step of splitting can include, first, splitting the pre-split body along the splitting line **100**, which is along the width 2W**1**, to result in a first and second split block, with each split block having a length of L**1**. After that step, then the first split block and second split block can be split along the splitting line **98**, which is along the length L**1**, to result in the four multi-use blocks **30**.

The step of splitting along the width of the pre-split body **70** can also include splitting the pre-split body **70** along a center line **102**, **103** of the third legs **94**, **96**. In FIG. **13**, the center line **102**, **103** is the same line as the splitting line **100**.

When the pre-split body **70** is made in the way described above, the result will be four multi-use blocks **30**, having first split face **42**, second split face **44** generally perpendicular to the first split face **42**, and at least one generally rectangular leg **50**, **56** extending from the side **34** opposite the first split face **42**.

A variety of techniques for splitting the concrete pre-split body **70** can be used. In one example, the splitting can be done in accordance with U.S. Pat. No. 8,327,833 incorporated herein by reference. Alternatively, a basic splitting process can be used. For example, in one method, the step of splitting along the splitting line **100** across the width 2W**1** uses a basic splitting technique, while the step of splitting along the split line **98** across the length is done in accordance with U.S. Pat. No. 8,327,833.

Other methods of making the block **30** can include making the block **30** with mold-textured faces as described in U.S. Pat. No. 6,464,199, which is incorporated herein by reference. The block **30** can also have a sculpted face at **36**, **38** as described in U.S. Pat. No. 7,140,867, which is incorporated herein by reference.

(3) Example Structures, FIGS. **4-12**

The block **30**, when made of concrete, can be used to make a variety of walls, including freestanding walls, small retaining walls (garden walls), columns, edging walls, single course edging, and other structures. These structures can be made to have aesthetically pleasing exterior appearances.

FIG. **4** illustrates one example column **106** that can be constructed from the block **30**. FIG. **5** illustrates the top view of the column of FIG. **4**. The column **106** includes a plurality of courses **107** of the blocks **30**. In the example shown, there are four blocks **30** in each course. In the top course, the four blocks **30** are shown at **108**, **109**, **110**, and **111**.

It should be appreciated that the column **106** is formed so that the exterior surfaces are all either the first split face **42** or second split face **44**, to give the column **106** an attractive exterior appearance. As can be seen in the drawings, the column **106** is formed by starting with one of the blocks, for example first block **108**, and then laying second block **109** adjacent to it, such that the end leg face **57** of the second leg **56** abuts the second end face **40** of the first block **108**. Also, the second split face **44** of the second block **109** will be aligned with the first split face **42** of the first block **108**. Next, the third block **110** is laid adjacent to the second block **109**, such that the second split face **44** of the third block **110** is aligned with the first split face **42** of the second block **109** and the end leg face **57** of the third block **110** abuts the second end face **40** of the second block **109**. Finally, the fourth block **111** is placed in between the first block **108** and third block **110** and opposing the second block **109**. The first split face **42** of the fourth block **111** will be laid so that it is next to and aligned with the second split face **44** of the first block **108**. The second split face **44** of the fourth block **111** will be aligned with the first split face **42** of the third block **110**. In adjacent courses **107** of the column **106** the blocks have opposite top face **46** or bottom face **48** facing upward so that the blocks in the column are not vertically aligned in adjacent courses.

FIG. **6** illustrates the top view of a combination column and freestanding wall at **114**. The wall **114** abuts the column **106**. The wall **114** is made from the blocks **30** in a nested formation **116**. By "nested" it is meant that when two of the blocks **30** are placed end-to-end with their legs pointing in the same direction, a space is created between the adjacent legs of the two blocks and receives the leg of a third like block.

In FIG. **6**, a first row of blocks is shown at **118**, while a second row of blocks is shown at **120** opposing and nested with the first row **118**. The first row **118** includes blocks **121**, **122**, **123**, **124** arranged end-to-end, such that the second end face **40** of the block **121** is adjacent to the first end face **38** of the block **122**, and the legs **50**, **56** are pointing in the same direction, toward the second row **120**. Similarly, the second end face **40** of the block **122** is adjacent to the first end face **38** of the block **123**, and the second end face **40** of the block **123** is adjacent to the first end face **38** of the block **124**.

When the blocks **121-124** are arranged as shown in the first row **118**, the receiving spaces **60**, **68** (FIG. **2**) are created, to receive the legs **50**, **56** from the blocks **125**, **126**, **127**, **128** making up the second row **120**. The blocks **125-128** are arranged end-to-end, as described for the first row **118**. As can be seen in FIG. **6**, the second leg **56** of the

block **125** is received in the space **60** (FIG. **2**) between the first leg **50** and second leg **56** of the block **121**. The first leg **50** is received in the space **68** (FIG. **2**) of the block **121**. This pattern continues throughout the wall **114**.

It should be noted that row **120** also includes a partial block section **129**. A splitting groove may be made across the upper or lower face **46**, **48** of the block **30** to facilitate the splitting to form the block section **129**, when one is needed.

FIG. **7** illustrates a top view of another embodiment of a combination column **106** and wall **130**, constructed from blocks **30** of FIG. **1**. In this embodiment, the wall **130** is a non-nested wall, in which the end leg faces **57**, **64** abut each other.

In FIG. **7**, the wall includes a first row **132** opposed to a second row **134**. The first row includes blocks **136**, **137**, **138**, **139** made according to the block **30** of FIG. **1**. The second row **134** includes blocks **140**, **141**, **142**, **143**, also made according to the block **30** of FIG. **1**. The blocks **136-139** of the first row **132** are arranged end to end, so that the first split face **42** of each block is aligned with the next adjacent block. The second end face **40** of the block **136** abuts against the first end face **38** of the block **137**. Similarly, the second end face **40** of the block abuts the first end face **38** of the block **138**. Similarly, the second end face **40** of the block **138** abuts the first end face **38** of the block **139**.

The second row **134** is arranged similarly as the first row **132**, with respective end faces **40**, **38** abutting each other, while the first split face **42** of each of the blocks **140-143** is aligned with the next adjacent block.

When arranged in this manner, the first leg **50** of each of the blocks **136-139** is opposed to and abuts one of the first legs **50** of the blocks **140-143**. Similarly, the second leg **56** of each of the blocks **136-139** is opposed to and against one of the second legs **56** of each of the blocks **140-143**.

FIG. **8** illustrates a top view of another embodiment of a combination column **106** and wall **146**. The wall **146** in FIG. **8** is a curved wall **146**. The taper of the second end face **40** allows for the blocks **30** to be arranged in curves without exposing any gaps between the blocks **30**.

In FIG. **8**, a first row **148** of blocks **30** is shown opposed to a second row **150** of blocks **30**. In each of the rows, the blocks **30** are arranged adjacent to each other so that the respective first split face **42** of each block **30** is adjacent to and in alignment with the first split face **42** of the next adjacent block **30**.

As can be seen in FIG. **8**, the first row **148** forms a curve so that the outside curve is formed by the first split face **42**. In that first row **148**, the second end face **40** of each of the blocks **30** is engaged completely against the first end face **38**, so that there are no gaps between them. Because of the taper on the second end face **40**, when the first end face **38** of the next adjacent block **30** is pressed against it, a curve is formed along the first row **148** on the edge formed by the adjacent first split faces **42**.

The second row **150** is arranged to be opposing the first row **148**. The second end face **40** of one of the blocks **30** is adjacent to the first end face **38** of the next adjacent block **30** so that at least the adjacent corners are touching. To form a curve in the second row **150**, the gap between adjacent second end faces **40** and first end faces **38** is not visible from outside of the wall. This forms the inside curve of the second row **150** along the first split faces **42** of the adjacent blocks **30**.

FIG. **9** is a perspective view of another wall **152** that can be constructed from blocks **30** of FIG. **1**. The wall **152** is a non-nested waffle face wall **154**. The waffle face wall **154** is constructed by placing two rows **156**, **158** of blocks **30** so that the second side **36** of each block **30** in the row **156** is against the second side **36** of each block **30** in the row **158**. This results in the legs **50**, **56** of each of the blocks **30** being directed outwardly, to be visible from the exterior of the wall **152**. In the example shown in FIG. **9**, the waffle face wall **154** has five courses with the blocks **30** of each course offset from the adjacent course by the width of one of the legs, **50**, **56**.

FIG. **10** is a perspective view of a wall **160** including the waffle faced wall **154** adjacent the column **106**. The wall **160** is finished with cap blocks **162**, which cover the top of both of the opposing rows **156**, **158**.

FIG. **11** is a perspective view of a mixed face wall **164** constructed from the blocks **30**. In this embodiment, the wall **164** includes a combination of both the wall **130** of FIG. **7** and the waffle faced wall **154** of FIG. **9**. Many combinations are possible. In the example shown in FIG. **11**, the bottom three courses **165** of the mixed face wall **164** is a wall **130** as shown in FIG. **7**, in which the exterior appearance is relatively planar, with the first split face **42** of each of the blocks **30** being visible. The top two courses of the wall **164** are the waffle face **154**, in which the legs **50**, **56** are visible. Cap blocks **162** form the upper surface of the wall **164** and cover both opposing rows in the mixed face wall **164**. The column **106** is adjacent and against the mixed face wall **164**.

The block **30** can be used for making a small retaining wall (a garden wall). FIG. **12** shows a top view of three of the blocks **30** of FIG. **1** oriented in a configuration to form a retaining wall having a setback. The blocks **30** can be stacked in successive courses with a running bond and typically with some batter, which is a gradual upward and backward slope to assist the wall in resisting forces exerted on it by the retained soil. A setback can be used with each block **30** to assist in forming the desired batter.

Preferably, the block **30** includes no lips, tongues, "dogbones" or other integral "positive-interference" setback-establishing configurations. That is, the preferred block **30** is lip-free, tongue-free, dogbone-free, and other positive-interference-free. In lieu thereof, the block **30** includes a visual setback indicator **166**. In general, the visual setback indicator **166** helps to guide the construction of a retaining wall to have a desired setback distance for successive courses of blocks in a wall constructed with the blocks **30**.

In order to be easily used, the visual setback indicator **166** is on the upper face **46** of the block **30** and is so located as to provide a reference in relation to the lower front edge **43** (FIG. **1**) of the block(s) **30** to be laid on the upper face **46**. In contemplated embodiments, the visual setback indicators are easily visible to the installer during the installation process, and are located relative to each other so as to indicate the proper setback to the installer. Because most walls are built with a "running bond" pattern, the visual setback indicator includes visual portions on the upper face **46** near the edges where the upper face **46** meets the first and second end faces **38**, **40**.

A variety of embodiments for the visual setback indicator **166** are contemplated. In FIG. **12**, the visual setback indicator **166** is shown as extending only partially across the upper face **46** in two sections **167**, **168**. The section **167** extends on the upper face **46** from the first end face **38**. The second section **168** extends on the upper face **46** from the second end face **40**. In this embodiment, the first and second sections **167**, **168** are each less than one-third of the entire width across the upper face **46** at the location of the visual setback indicator **166**.

B. The Second Embodiment of a Multi-Use Block, FIGS. **14-21**

(1) The Block, FIGS. **14** and **15**

The second embodiment of a multi-use building block is illustrated in FIG. **14** at **170**. Like the block of the first embodiment, the block **170** can be made of many different types of materials. When used as a block for construction of, e.g., walls and columns, it is typically made of concrete, preferably dry cast concrete but it can be made of wet cast concrete. The block **170** includes a body **172** having a length L**1** and a width W**1**. The length L**1** is longer than the width W**1**, so that the body **172** is elongate. The body **172** is "generally rectangular," as previously defined.

In other arrangements, the block **170**, when utilized in, for example, casual furniture arrangements can be made from non-concrete materials. The non-concrete materials can include, for example, wood or plastic. Example plastics can include thermoset plastics, polystyrene, PVC; or other moldable material. In the embodiment of FIG. **14**, the body **172** includes opposite first and second sides **174**, **176**, and opposite first and second end faces **178**, **180** extending there between.

As characterized herein, the body **172** is tapered, in that it is longer at second side **176** than first side **174**. In section (4) below, alternate characterizations of the body **172** are discussed. This taper can be achieved by setting one or both of the end faces **178**, **180** at an angle **181** to the second side **176**. The second end face **180** extends inwardly as it extends from the second side **176** to the first side **174**. The angle **181** of the second end face **180** relative to the second side **176** will be less than 10 degrees, for example about 8 degrees. In this embodiment, the body **172** is tapered inwardly from end faces **178**, **180** toward a leg **192**, which will be explained further below.

In some methods of making the block **170**, the resulting second side **176** will be a first split face **184**, and the first end face **178** will be a second split face **186**. An example method of making will be described further below in connection with FIG. **21**.

In some uses of the block **170**, the second side **176** will be a front section having a front face **179**. In some structures, the front face **179** will be exposed when the block **170** is assembled with like blocks **170** in a structure. The first and second end faces **178**, **180** extend rearwardly from the front face **179**. The block **170** will have a rear section **183** formed integrally with the front section **177**.

The block **170** further includes an upper face **188** and a lower face **190** (FIG. **14**). Preferably, the upper face **188** and lower face **190** are generally planar and parallel to each other. In this example, the block **170** is free of through-holes or cores, although it could be made with such voids.

The block **170** includes at least a first leg portion **191**, which can be part of the rear section **183**. The first leg portion **191** is leg **192**. As characterized herein, the leg **192** extends from the first side **174** of the body **172**. Alternate definitions are included in section (4) below. The leg **192** is generally rectangular, but in preferred embodiments, deviates from a rectangular shape as can be seen in FIG. **14**. The leg **192** includes opposite leg sides **194**, **195**. The opposite leg sides **194**, **195** extend between an end leg face **196** and the first side **174** of the body **172**. In this embodiment, the leg sides **194**, **195** are angled (or tapered) away from each other as they extend away from the body **172** and toward the end leg face **196**. The angle is shown at **198** for leg side **194** and is less than 10 degrees, for example, about 4 degrees. The leg side **195** is also angled at angle **199**, which is the same angle as angle **198**.

The end leg face **196** includes a recessed portion. For example, the end leg face **196** has a section **196***a* recessed inwardly from the leg side **194** at an angle **200** of less than 10 degrees, for example about 4 degrees. Similarly, the end leg face **106** has a section **196***b* recessed inwardly from leg side **195** at angle **201**, which is the same angle as angle **200**.

The leg **192** has a center line **202** which is perpendicular to the center line **204** of the body **172**. The leg **192** has a width W**2**, which is parallel to the length L**1** of the body **172**. The width W**2** is the widest portion of the leg **192**, measured at the end leg face **196**, in this embodiment. Further, the leg **192** includes a length L**2**, perpendicular to the length L**1** of the body **172**. The length L**2** is the greatest length of the first leg **192**, as measured from the body **172** to an end point of one of the leg sides **194**, **195**.

The leg **192** of the block **170** is the only leg on the block **170**. In this example, the leg **192** is spaced from each of the first end face **178** and second end face **180**.

In the embodiment shown in FIG. **14**, the leg **196** is spaced from the first end face a distance D**1**, and spaced from the second end face **180** a distance D**2**, in which D**1** is greater than D**2**.

Still in reference to FIG. **14**, the first side **174** includes first portion **206**, which is between the first end face **178** and the leg side **194**. This first portion **206** is at a non-perpendicular angle **208** relative to the first end face **178** and to the leg side **194**. For example, the angle **208** between first portion **206** and first end face **178** is less than 90 degrees, for example about 86 degrees. As can be seen, the first portion **206** of the first side **174** angles inwardly (i.e., tapers inwardly) as it extends from the first end face **178** to the leg side **194**.

Similarly, the first side **174** has a second portion **210**. The second portion **210** extends between the second end face **180** and the leg side **195**. The second portion **210**, in this example, is angled at a non-perpendicular angle **212** between the second end face **180** and the second portion **210**. The angle **212** will be greater than 90 degrees, for example about 94 degrees. As can be seen, the second portion **210** tapers inwardly at an angle **182** as it extends from the second end face **180** to the leg side **195**. The angle **182** will be less than 10 degrees, for example, about 4 degrees.

The angle **198** of the leg side **194**, the angle **200** of the end leg face section **196***a*, the angle **198** of leg side **195**, the angle **200** of the end leg face section **196***b* and the angle **182** of the second side portion **210** are the same. These relationships are helpful when constructing a column **252** (FIGS. **16** and **17**) to help lock the blocks **170** together to prevent any one of the blocks **170** from moving laterally relative to the others. There is a similar locking relationship between second portion **210** of the first side **174** and the leg side **194**. A steady, linear taper shown by angles **182**, **198** and **200** can also be stepped or curvilinear to be helpful in resisting pullout of the leg **192** from between two adjacent units in the same course.

In one useful example, the block **170** will have a length L**1** of less than 13 inches, for example about 11.8-12 inches. The width W**1** will be 3-4 inches, for example about 3.6 inches. The length L**2** will be less than 4 inches, for example about 2.8-3 inches. The length of D**1** will be between 3 and 4 inches, for example about 3.4 inches, while the length of D**2** will be less than 3 inches, for example about 2-2.1 inches. The angle **214** will be about 90 degrees, while the

angle **216** will be about 82 degrees. The angles **218** and **220** will each be about 82 degrees. The height between the upper face **188** and lower face **190** will be less than 5 inches, for example about 4 inches.

(2) Example Method, FIG. **21**

Before turning to various freestanding walls, columns, and other structures that can be made with the block **170**, attention is directed to FIG. **21**, which illustrates one method for making the block **170**, when made from concrete. In FIG. **21**, a pre-split body is shown at **224**. The pre-split body **224** can be made as a result of molding dry cast concrete. The pre-split body **224** has a length **2L1** and a width **2W1** and, the pre-split body **224** (without the legs **240**, **242**, **244**, **246**) is generally rectangular.

The pre-split body **224** includes a first side **226** and an opposite second side **228**. Extending between the first side **226** and second side **228** are opposite first and second end walls **230**, **232**.

In the example shown in FIG. **21**, the first end wall **230** tapers from a center **234** inwardly as the end wall **230** extends from the center **234** to each of the first side **226** and second side **228**. Similarly, the second end wall **232** tapers inwardly as it extends from a center **236** to the first side **226** and second side **228**.

The pre-split body **224** will have a generally planar upper face **238** and lower face. The upper face **238** and lower face will be generally parallel to each other.

Still in reference to FIG. **21**, at least a first leg **240** and second leg **242** extend from the first side **226** of the pre-split body **224**. Each of the legs **240**, **242** has a width W2 parallel to the length **2L1** of the pre-split body **224**, and a length L2 perpendicular to the length **2L1** of the pre-split body **224**. The legs **240**, **242** are generally rectangular.

The pre-split body **224** further includes a first leg **244** and second leg **246** extending from the second side **228** of the pre-split body **224**. The first leg **244** and second leg **246** will generally be the same size as the first leg **240** and second leg **242** and have their center lines perpendicular to the center line of the pre-split body **224**.

To make the block **170** of FIG. **14**, the method includes splitting the concrete pre-split body **224** along the length at splitting line **248** and along the width at splitting line **250** to result in four multi-use blocks **170** (FIG. **14**). The resulting four multi-use blocks **170** will each have a body **172** with length L1 and width W1, and first split face **184**, created along the splitting line **248** and second split face **186** created along the splitting line **250**. The second split face **186** will be generally perpendicular to the first split face **184**.

The step of splitting can include, first, splitting the pre-split body **224** along the splitting line **250**, which is along the width **2W1**, to result in a first and second split block, with each split block having a length of one-half of **2L1**, which would be L1. After that step, then the first split block and second split block can be split along the splitting line **248**, which is along the length L1, to result in the four multi-use blocks **170**.

A variety of techniques for splitting the pre-split body **224** can be used. For example, in one method, the step of splitting along the splitting line **250** across the width **2W1** uses a basic splitting technique, while the step of splitting along the split line **248** across the length is done in accordance with U.S. Pat. No. 8,327,833, which is incorporated herein by reference.

(3) Structures Made with the Embodiment of FIGS. **14-15**: FIGS. **16-20**

The block **170**, when made from concrete, can be used to make a variety of freestanding walls, garden walls, edging walls, single course edging, columns, and other structures. The structures can be made to have aesthetically pleasing exterior appearances.

FIG. **16** illustrates one example column **252** that can be constructed from the block **170**. FIG. **17** shows a top view of the column of FIG. **16**. The column **252** includes a plurality of courses **254** of the blocks **170**. In the example shown, there are four blocks **170** in each course **254**. In the top course, the four blocks **170** are shown at **256**, **257**, **258**, and **259**.

The column **252** is formed so that the exterior surfaces are all either the first split face **184** or second split face **186**, to give the column **252** an attractive exterior appearance.

In one example, the column **252** is formed by starting with one of the blocks, for example the first block **256**, and then laying the second block **257** adjacent to it, such that the second split face **186** of the block **257** is in alignment with the first split face **184** of the first block **256**. The second end face **180** of the block **256** will abut the first portion **206** of the first side **174** of the block **257**. Next, the third block **258** is laid adjacent to the second block **257**, such that the second split face **186** of the third block **258** is adjacent and in alignment with the first split face **184** of the second block **257**. The second end face **180** of the second block **257** abuts the first portion **206** of the third block **258**. The third block **258** is generally opposite the first block **256**. Finally, the fourth block **259** is laid between the first block **256** and the third block **258**, such that the second split face **186** of the fourth block **259** is adjacent and in alignment with the first split face **184** of the third block **258**. Because of the angles of the sides **194** and **195** of the leg **192**, the fourth block **259** must be moved into the position illustrated in FIG. **16** from above the other blocks. The first split face **184** of the fourth block **259** is then adjacent and in alignment with the second split face **186** of the first block **256**. The first portion **206** of the fourth block **259** abuts the second end face **180** of the third block **258**. Further, the second end face **180** of the fourth block **259** abuts the first portion **206** of the first block **256**. The angles **198** of the leg sides **194** and **195** of each block **256-259** are the same as the angles **182** of the second portion **210** and the angles **200** of each section **196*a***, **196*b*** of the end leg face **196**. As a result, when the blocks **256-259** are placed as illustrated in FIG. **16**, they lock the four blocks **256-259** together so they cannot be moved laterally. Optionally, the courses can be glued together with a suitable adhesive, to increase the stability and integrity of the structure.

FIG. **18** illustrates the top view of a combination column **252** and freestanding wall **262**. The wall **262** is abuts the column **252**. The wall **262** is made from the blocks **170** in a nested formation **264**. By "nested" it is meant that when two of the blocks **170** are placed end-to-end with their legs **192** pointing in the same direction, a space is created between the adjacent legs **192** of the two blocks, which receives the leg **192** of a third like block.

In FIG. **18**, a first row of blocks is shown at **266**, while a second row of blocks **268** is shown opposing and nested with the first row of blocks **266**. The first row of blocks **266** includes blocks **270**, **271**, **272**, and **273** arranged end-to-end, such that the first split face **184** of each of the blocks is adjacent and in alignment with the first split face **184** of the next adjacent block to form a generally straight line. It

should be noted that row **266** also includes a half block **274**. A splitting groove may be made across the middle of the upper or lower face **188**, **190** of the block **170** to facilitate the splitting to form the half block **274** when one is needed. The second end face **180** of each block **170** abuts the first end face **178** of the adjacent block.

When the blocks **270-273** and half block **274** are arranged end-to-end, in the first row **266**, receiving spaces **276** are created to receive the legs **192** of blocks **278**, **279**, **280**, **281** making up the second row **268**. The blocks **278-281** are arranged end-to-end, as described for the first row **266**.

As can be seen in FIG. **18**, the leg **192** of the block **278** is received within the receiving space **276** between blocks **274** and **270**. The leg **192** of the block **270** is received in the receiving space **276** between blocks **278** and **279**. The leg **192** of the block **271** is received within the receiving space **276** between the blocks **279** and **280**. The pattern continues throughout the wall **262**. In the wall **264**, the angled leg sides **194** and **195** of a block interlock with the angled leg sides **194**, **195** of two other blocks on the opposite side of the wall **262** and prevent the block from being pulled out laterally.

FIG. **19** is a perspective view of another wall **280** that can be constructed from the blocks **170** of FIG. **14**. The wall **280** is a non-nested waffle face wall **282**. The waffle face wall **282** is constructed by placing two rows **284**, **285** of the blocks **170** so that the second side **176** of each block **170** in the row **284** abuts the second side **176** of the block **170** in the row **285**. This results in the legs **192** of each of the blocks **170** being directed outwardly, to be visible from the exterior of the wall **280**. In the example shown in FIG. **19**, the waffle face wall **282** has five courses.

The block **170** can be used for making a small retaining wall (a garden wall). FIG. **20** shows a top view of three of the blocks **170** of FIG. **14** oriented in a configuration to form a retaining wall having a setback. The blocks **170** can be stacked in successive courses with a running bond and typically with some batter, which is a gradual upward and backward slope to assist the wall in resisting forces exerted on it by the retained soil. A setback can be used with each block **170** to assist in forming the desired batter.

Preferably, the block **170** includes no lips, tongues, "dogbones" or other integral "positive-interference" setback-establishing configurations. That is, the preferred block **170** is lip-free, tongue-free, dogbone-free, and other positive-interference-free. In lieu thereof, the block **170** includes a visual setback indicator **286**. In general, the visual setback indicator **286** helps to guide the construction of a retaining wall to have a desired setback distance for successive courses of blocks in a wall constructed with the blocks **170**.

In order to be easily used, the visual setback indicator **286** is on the upper face **188** of the block **170** and is so located as to provide a reference in relation to a lower front edge of the block(s) **170** to be laid on the upper face **188**. In contemplated embodiments, the visual setback indicators are easily visible to the installer during the installation process, and are located relative to each other so as to indicate the proper setback to the installer. Because most walls are built with a "running bond" pattern, the visual setback indicator includes visual portions on the upper face **188** near the edges where the upper face **188** meets the first and second end faces **178**, **180**.

A variety of embodiments for the visual setback indicator **286** are contemplated. In FIG. **20**, the visual setback indicator **286** is shown as extending only partially across the upper face **188** in two sections **287**, **288**. The section **287** extends on the upper face **188** from the first end face **178**. The second section **288** extends on the upper face **188** from the second end face **180**. In this embodiment, the first and second sections **287**, **288** are each less than one-third of the entire width across the upper face **188** at the location of the visual setback indicator **286**.

(4) Additional Observations re the Embodiment of FIGS. **14-21**

In addition to the characterizations above, additional observations and/or alternate definitions regarding the block **170** embodiment of FIGS. **14-21** are included herein.

Referring to FIG. **14**, the block body **172** includes opposite first and second sides **174**, **176**, and opposite first and second end faces **178**, **180** extending therebetween.

The body **172** further has opposite first and second bearing faces **401**, **402** (FIG. **15**). The first and second bearing faces **401**, **402** extend between the first and second sides **174**, **176** and between the first and second end faces **178**, **180**. In normal use, when the block **170** is used for construction of structures such as freestanding walls, garden walls, edging walls, single course edging, columns, etc., the first bearing face **401** is the upper face **188** in use. The second bearing face **402** is the lower face **190**.

The first bearing face **401** has a contact surface portion **404**. The contact surface portion **404** is the part of the first bearing face **401** that is in touching engagement with a like block **170** stacked on the first bearing face **401**. In one or more example embodiments, the contact surface portion **404** is the outermost projecting part of the first bearing face **401**. In preferred embodiments, the contact surface portion **404** is generally planar. By "generally planar", it is meant that the surface forms a plane but can have some minor deviations.

The second bearing face **402** has a contact surface portion **405**. The contact surface portion **405** is the part of the second bearing face **402** that is in touching engagement with either the ground or with the contact surface portion **404** of the first bearing face **401** of the like block **170**, when stacked on the first bearing face **401** of the like block **170**. In one or more example embodiments, the contact surface portion **404** is the outermost projecting part of the second bearing face **402**. In preferred embodiments, the contact surface portion **405** is generally planar. In one or more example embodiments, the contact surface portion **404** of the first bearing face **401** and the contact surface portion **405** of the second bearing face **402** are generally parallel to each other.

The second side **176** of the body **172** has first and second opposite ends **406**, **407**. The second side **176** defines a second side center plane **410** that is generally orthogonal to the first and second bearing faces **401**, **402**.

An end face center plane **411** that is generally orthogonal to the first and second bearing faces **401**, **402** extends between the end faces **178**, **180**. The end face center plane **411** is generally orthogonal to the second side center plane **410**. In one or more embodiments, the end face center plane **411** contains the centerline **204** of the body **172**.

In reference again to FIG. **14**, the first side **174** of the body **172** defines leg **192**. As such, the first side **174** of the body has the opposite leg sides **194**, **195** and leg end face **196**. The leg side **194** corresponds to a first leg side **408**, while the opposite leg side **195** corresponds to second leg side **409**. The leg end face **196** extends between the first leg side **408** and second leg side **409**.

The first side **174** of the body **172** has the first portion **206**. The first portion **206** extends between the first end face **178** and the first leg side **408**.

Preferably, the first portion **206** is angled at a first extension angle **412** away from the second side **176** of the body

172, as the first portion 206 extends from the first leg side 408 to the first end face 178, the first extension angle 412 being non-zero. By the term, "extension angle", it is meant the angle measured when a straight line is drawn between endpoints, here the endpoints being: (i) the "intersection" of the first leg side 408 and first portion 206, and (ii) the "intersection" of the first end face 178 and first portion 206; but "extension angle" does not require the surface (here, the first portion 206) between the end points to be straight or planar. Rather, the surface between the end points can be curved, jagged, indented, protruding, etc. As used herein, by the term "intersection", it is meant the midpoint between the joining surfaces, such that if the intersection is radiused, the endpoint is taken at the midpoint of the radius.

The first extension angle 412 is measured relative to a line parallel to the end face center plane 411. The first extension angle 412 can be less than 10 degrees in some embodiments; less than 9 degrees in some embodiments; less than 8 degrees in some embodiments; less than 7 degrees in some embodiments; less than 6 degrees in some embodiments; less than 5 degrees in some embodiments. The first extension angle 412 can be greater than 1 degree in some embodiments; greater than 2 degrees in some embodiments; greater than 3 degrees is some embodiments; and greater than 4 degrees in some embodiments. In one or more example embodiments, the first extension angle 412 can be 2-7 degrees; and in one or more example embodiments, the first extension angle 412 can be 3-5 degrees. In one or more example embodiments, the first extension angle 412 can be about 4 degrees.

The first side 174 of the body 172 has the second portion 210 extending between the second end face 180 and the second leg side 409.

Preferably, the second portion 210 is "angled" at a second extension angle, also corresponding to the angle 182 shown in FIG. 14, away from the second side 176 of the body 172, as the second portion 210 extends from the second leg side 409 to the second end face 180, the second extension angle 182 being non-zero. As above, the term, "extension angle", means the angle measured when a straight line is drawn between endpoints, here the endpoints being: (i) the intersection of the second leg side 409 and second portion 210, and (ii) the intersection of the second end face 180 and second portion 210; but "extension angle" does not require the surface (here, the second portion 210) between the end points to be straight or planar.

The second extension angle 182 is measured relative to a line parallel to the end face center plane 411. The second extension angle 182 can be about equal to or different from the first extension angle 412. The second extension angle 182 can be less than 10 degrees in some embodiments; less than 9 degrees in some embodiments; less than 8 degrees in some embodiments; less than 7 degrees in some embodiments; less than 6 degrees in some embodiments; less than 5 degrees in some embodiments. The second extension angle 182 can be greater than 1 degree in some embodiments; greater than 2 degrees in some embodiments; greater than 3 degrees is some embodiments; and greater than 4 degrees in some embodiments. In one or more example embodiments, the second extension angle 182 can be 2-7 degrees; and in one or more example embodiments, the second extension angle 182 can be 3-5 degrees. In one or more example embodiments, the second extension angle 182 can be about 4 degrees.

The leg 192 is preferably narrower proximal the first portion 206 and second portion 210 of the first side 174 of the body 172 than at the leg end face 196. By the term "narrower", it is meant that: (i) a greatest distance between the first leg side 408 and second leg side 409 is less at the location where the leg 192 projects from the first portion 206 and second portion 210 than (ii) a greatest distance between the first leg side 408 and second leg side 409 at (adjacent to) the leg end face 196.

Alternately phrased, the leg 192 is narrower at its proximal end than at its distal end 419. The proximal end is closer to the second side 176 of the body 172 than the distal end 419, and the distal end 419 defines a free end 420 of the leg 192. The free end 420 of the leg 192 defines the leg end face 196. The proximal end of the leg 192 is the part of the leg that projects from the first portion 206 and second portion 210.

In preferred embodiments, the leg 192 has a widest portion 418 being at the leg end face 196. By "widest", it is meant that (i) a shortest distance between the first leg side 408 and second leg side 409 at (adjacent to) the leg end face 196 is greater than (ii) a shortest distance between the first leg side 408 and second leg side 409 along any other part of the leg 192.

The leg 192 has a center plane 416 that is generally orthogonal to the first and second bearing faces 401, 402. The center plane 416, in one or more example embodiments, can bisect the leg 192. In FIG. 14, the center plane 416 contains the leg center line 202.

As can be seen in FIG. 14, the leg 192 extends generally transverse to a remaining portion of the body 172. By "transverse", it is meant the center plane 416 of the leg 192 crosses the end face center plane 411. While the center plane 416 of the leg 192 need not be orthogonal to the end face center plane 411, in one or more example embodiments, the leg center plane 416 is orthogonal to the end face center plane 411.

An example of the leg 192 being narrower proximal the first portion 206 and second portion 210 includes the first leg side 408 diverging from the second leg side 409, as the first leg side 408 extends away from the first portion 206 of the first side 174 of the body 172. In one or more example embodiments, the first leg side 408 extends away from the first portion 206 at a third extension angle, corresponding to angle 198 in FIG. 14, relative to the leg center plane 416. The third extension angle 198 will be non-zero. The term "extension angle" is as used above, and refers to measurement of a line drawn between endpoints. In this case, the endpoints are at the intersection of: (i) first portion 206 and first leg side 408; and (ii) first leg side 408 and leg end face 196. The term "extension angle" does not require the surface between the end points to be straight or planar.

An extension angle 198*a* is also illustrated as being the extension angle of the first leg side 408 extending from leg end face 196 to the first portion 206. The extension angle 198*a* will be the same measurement as the third extension angle 198.

The second leg side 409 diverges from the first leg side 408, as the second leg side 409 extends away from the second portion 210 of the first side 174 of the body 172. In one or more example embodiments, the second leg side 409 extends away from the second portion 210 at a fourth extension angle 199 in FIG. 14, relative to the leg center plane 416. The fourth extension angle 199 will be non-zero. The term "extension angle" is as used above, and refers to measurement of a line drawn between endpoints. In this case, the endpoints are at the intersection of: (i) second portion 206 and second leg side 409, and (ii) second leg side 409 and leg end face 196; although, again, as stated above,

"extension angle" does not require the surface between the end points to be straight or planar.

An extension angle **199***a* is also illustrated as being the extension angle of the second leg side **409** extending from leg end face **196** to the second portion **409**. The extension angle **199***a* will be the same measurement as the fourth extension angle **199**.

The third extension angle **198** and fourth extension angle **199** can be equal to each other or different from each other. The third extension angle **198** and the fourth extension angle **199** can be less than 10 degrees in some embodiments; less than 9 degrees in some embodiments; less than 8 degrees in some embodiments; less than 7 degrees in some embodiments; less than 6 degrees in some embodiments; less than 5 degrees in some embodiments. The third extension angle **198** and fourth extension angle **199** can be greater than 1 degree in some embodiments; greater than 2 degrees in some embodiments; greater than 3 degrees is some embodiments; and greater than 4 degrees in some embodiments. In one or more example embodiments, the third extension angle **198** and fourth extension angle **199** can be 2-7 degrees; and in one or more example embodiments, the third extension angle **198** and fourth extension angle **199** can be 3-5 degrees. In one or more example embodiments, the third extension angle **198** and fourth extension angle **199** can be about 4 degrees.

The leg end face **196** defines a recess **422**. The recess **422** can be useful when arranging the blocks **170** together to form columns **252**.

Preferably, the recess **422** is in complete extension between the first and second bearing faces **401**, **402**. The recess **422** extends inwardly toward the remaining portion of the block **170**. Alternately phrased, the recess **422** extends inward toward the second side **176** of the body **172**.

In preferred embodiments, the recess **422** extends at least partially between the first leg side **408** and second leg side **409**. By "at least partially", it is meant that the recess **422** is not required to be in complete extension between the first leg side **408** and second leg side **409**. For example, the recess **422** can start at the first leg side **408** and extend only part of the way to the second leg side **409** by stopping short of meeting the second leg side **409**; or vice-versa, by starting at the second leg side **409** and extending only part of the way to the first leg side **408**); or the recess **422** can extend at any location along the leg end face **196** and not extend fully to the first leg side **408** or second leg side **409**. In one example, the recess **422** can extend by starting at one of the first leg side **408** or second leg side **409** and stop at the middle of the leg **192** at the leg center plane **416**, with the remaining portion of the leg end face **196** to the other of the leg sides **408** or **409** being non-recessed.

In one or more example embodiments, the leg end face recess **422** extends inwardly at least 90% of an extension between the first leg side **408** and second leg side **409**.

In some example embodiments, the leg end face recess **422** extends inwardly at least 95% of an extension between the first leg side **408** and second leg side **409**.

In some example embodiments, the leg end face recess **422** extends inwardly at least 98% of an extension between the first leg side **408** and second leg side **409**.

While many embodiments are possible, in FIG. **14**, the leg end face recess **422** is defined by at least first leg end face section **196***a* and second leg end face section **196***b*. At least one of the first leg end face section **196***a* and second leg end face section **196***b* extend inwardly toward the second side **176** of the body **172**. In the embodiment shown in FIG. **14**, both the first leg end face section **196***a* and second leg end face section **196***b* extend inwardly toward the second side **176** of the body **172**.

In one or more example embodiments, the first leg end face section **196***a* extends inwardly in at least partial extension from the first leg side **408**.

In one or more example embodiments, the second leg end face section **196***b* extends inwardly in at least partial extension from the second leg side **409**.

While many different shapes and geometries are possible, in preferred implementations, the first leg end face section **196***a* is a generally non-curved section. The second leg end face section **196***b* can preferably be a generally non-curved section.

In one or more example embodiments, the first leg end face section **196***a* can be a straight section. In one or more example embodiments, the second leg end face section **196***b* can be generally a straight section.

In some embodiments, the first leg end face section **196***a* and second leg end face section **196***b* meet at an intersection **424** in the leg end face **196**. The intersection **424** of the first leg end face section **196***a* and second leg end face section **196***b* can be at any location between the first leg side **408** and second leg side **409**. In one or more example embodiments, the intersection **424** is along a region of the leg end face **196** between 45-55% of the leg end face **196** between the first leg side **408** and second leg side **409**. For example, the intersection **424** can be plus or minus 5% of the distance from the center plane **416**, when the center plane **416** lies at 50% of the overall distance between the first leg side **408** and second leg side **409**.

In some example embodiments, the intersection **424** of the first leg end face section **196***a* and second leg end face section **196***b* is along a region of the leg end face **196** between 48-52% of the leg end face **196** between the first leg side **408** and second leg side **409**. For example, the intersection **424** can be plus or minus 2% of the distance from the center plane **416**, when the center plane **416** lies at 50% of the overall distance between the first leg side **408** and second leg side **409**.

In some example embodiments, the intersection **424** of the first leg end face section **196***a* and second leg end face section **196***b* is along a region of the leg end face **196** that is in the center between the first leg side **408** and second leg side **409**, for example, even with the center plane **416**, when the center plane **416** lies at 50% of the overall distance between the first leg side **408** and second leg side **409**.

Referring to FIG. **14**, the first leg end face section **196***a* extends inwardly in complete extension from the first leg side **408** to the second leg end face section **196***b*.

In many example embodiments, the second leg end face section **196***b* extends inwardly in complete extension from the second leg side **409** to the first leg end face section **196***a*.

Preferably, the first leg end face section **196***a* is angled inwardly at a fifth extension angle, described previously at reference numeral **200**, relative to a plane orthogonal to the leg center plane **416**. In the example shown, the plane orthogonal to the leg center plane **416** includes the end face center plane **411**, meaning that in some preferred embodiments, the fifth extension angle **200** of the first leg end face section **196***a* is taken relative to the end face center plane **411**. In example embodiments, the first leg end face section **196***a* extends to about the leg center plane **416** in extension from the first leg side **408**. The term "extension angle" is as used above, and refers to measurement of a line drawn between endpoints. In this case, the endpoints are at the intersection of: (i) first leg side **408** and first leg end section

196*a*; and (ii) first leg end section **196***a* and leg center plane **416**. "Extension angle" does not require the surface between the end points to be straight or planar.

The fifth extension angle **200**, third extension angle **198**, fourth extension angle **199** and second extension angle **182** can be equal to each other or different from each other. The fifth extension angle **200** can be less than 10 degrees in some embodiments; less than 9 degrees in some embodiments; less than 8 degrees in some embodiments; less than 7 degrees in some embodiments; less than 6 degrees in some embodiments; less than 5 degrees in some embodiments. The fifth extension angle **200** can be greater than 1 degree in some embodiments; greater than 2 degrees in some embodiments; greater than 3 degrees is some embodiments; and greater than 4 degrees in some embodiments. In one or more example embodiments, the fifth extension angle **200** can be 2-7 degrees; and in one or more example embodiments, the fifth extension angle **200** can be 3-5 degrees. In one or more example embodiments, the fifth extension angle **200** can be about 4 degrees.

The second leg end face section **196***b* is angled inwardly at a sixth extension angle, described previously at reference numeral **201**, relative to the plane orthogonal to the leg center plane **416**. In the example shown, the plane orthogonal to the leg center plane **416** includes the end face center plane **411**, meaning that in some preferred embodiments, the sixth extension angle **201** of the second leg end face section **196***b* is taken relative to the end face center plane **411**. In some example embodiments, the second leg end face section **196***b* extends to about the leg center plane **416** in extension from the second leg side **409**. The term "extension angle" is as used above, and refers to measurement of a line drawn between endpoints. In this case, the endpoints are at the intersection of: (i) second leg side **409** and second leg end section **196***b*; and (ii) second leg end section **196***b* and leg center plane **416**; although, again, as stated above, "extension angle" does not require the surface between the end points to be straight or planar.

The sixth extension angle **201**, fifth extension angle **200**, third extension angle **198**, and fourth extension angle **199** can be equal to each other or different from each other. The sixth extension angle **201** can be less than 10 degrees in some embodiments; less than 9 degrees in some embodiments; less than 8 degrees in some embodiments; less than 7 degrees in some embodiments; less than 6 degrees in some embodiments; less than 5 degrees in some embodiments. The sixth extension angle **201** can be greater than 1 degree in some embodiments; greater than 2 degrees in some embodiments; greater than 3 degrees is some embodiments; and greater than 4 degrees in some embodiments. In one or more example embodiments, the sixth extension angle **201** can be 2-7 degrees; and in one or more example embodiments, the sixth extension angle **201** can be 3-5 degrees. In one or more example embodiments, the sixth extension angle **201** can be about 4 degrees.

By reviewing the column **252** in FIG. **17**, it can be appreciated that for advantages in constructing the column **252** in a manner which will cause the blocks **170** to lock together and resist lateral movement between blocks **170**, when the first bearing face **401** is used as the upper face, the second extension angle **182** (the angle of the second portion **210** extending from the second leg side **409** to the second end face **180**); the third extension angle **198** (the angle the first leg side **408** extends away from the first portion **206**); fourth extension angle **199** (the angle the second leg side **409** extends away from the second portion **210**); and the fifth extension angle **200** (the angle the first leg end face section **196***a* is angled inwardly) are made to be within plus or minus five degrees of each other. In some embodiments, the second extension angle **182**, third extension angle **198**, fourth extension angle **199**, and fifth extension angle **200** are within (plus or minus) three degrees of each other. In still further embodiments, the second extension angle **182**, third extension angle **198**, fourth extension angle **199**, and fifth extension angle **200** are about equal, meaning that they are within (plus or minus) one degree of each other.

In preferred embodiments, the first extension angle **412**, second extension angle **182**, third extension angle **198**, fourth extension angle **199**, fifth extension angle **200** and sixth extension angle **201** are each less than 10 degrees.

Preferably, to achieve advantages in construction of structures, the first extension angle **412**, second extension angle **182**, third extension angle **198**, fourth extension angle **199**, fifth extension angle **200** and sixth extension angle **201** each is within plus or minus 5 degrees of the others. This arrangement results in the block **170** being capable of forming column **252** and free standing wall **262**, in manner to lock the blocks **170** together and to be "tight" so that any free gaps in between adjacent blocks are small.

In one or more example embodiments, the first extension angle **412**, second extension angle **182**, third extension angle **198**, fourth extension angle **199**, fifth extension angle **200** and sixth extension angle **201** are within plus or minus 3 degrees of each other. Indeed, in some embodiments, each of the first extension angle **412**, second extension angle **182**, third extension angle **198**, fourth extension angle **199**, fifth extension angle **200** and sixth extension angle **201** are within plus or minus 1 degree of each other (i.e., about equal). When formed in this way, any gaps between adjacent blocks **170** are small.

By reviewing FIG. **14**, certain observations about symmetry or asymmetry are gleaned for preferred embodiments of the block **170**. For example, in preferred embodiments, the outer perimeter of the first bearing face **401** of the leg **192** is symmetrical about the leg center plane **416**. The "outer perimeter of the first bearing face **401** of the leg **192**" includes the first and second leg sides **408**, **409** and leg end face **196**. The leg center plane **416** is non-coplanar with the second side center plane **410**. Preferably, the leg center plane **416** is spaced from and parallel to the second side center plane **410**. The first bearing face **401** has an overall perimeter shape, as shown in FIG. **14** for example, and the non-leg portion of the outer perimeter shape of the first bearing face **401** is a non-mirror image relative to the second side center plane **410**. By "outer perimeter shape of the first bearing face **401** of the non-leg portion", it is meant the second side **176**; end faces **178**, **180**; first portion **206**; and second portion **210**. It does not include the first and second leg sides **408**, **409** and leg end face **196**. Of course, variations are possible.

In some example embodiments, the second end face **180** is angled at a seventh extension angle, previously described as angle **181**, in a direction toward the first end face **178**, as the second end face **180** extends from the second side **176** of the body **172** to the first side **174** of the body **172**. The seventh extension angle **181** is non-zero and is not a right angle. The seventh extension angle **181** is measured relative to a plane parallel to the second side center plane **410**. In preferred embodiments, the seventh extension angle **181** is acute, for example, less than 10 degrees. The seventh extension angle **181** can be greater than 1, for example, greater than 3 degrees. In some embodiments, the seventh extension angle **181** will be 7-9 degrees, for example about 8 degrees. The angled second end face **180** can allow for

advantages in constructing structures from the block **170** including, for example, curved walls. The term "extension angle" is as defined above.

In the embodiment of FIG. **14**, the distance between the first end face **178** and second end face **180** at the second side **176** of the body **172** (i.e., between the ends **406** and **407** of the second side **176**) is greater than the distance between the first end face **178** and second end face **180** at the first side **174** of the body **172** (i.e., at the intersection of the first end face **178** and first portion **206**; and at the intersection of the second end face **180** and the second portion **210**).

As previously described, the block **170** can be used with other like blocks **170** to construct structures such as columns **252** (FIG. **16**) and free standing walls **262**.

For example, and in reference now to FIG. **18**, the block **170** is configured and arranged such that when first block **270** and second block **271** (each constructed in accordance with block **170** as described above) are set next to each other, at least a portion of body second end face **180** of the first block **270** is in contact with at least a portion of the body first end face **178** of the second block **271**. The second sides **176** of the first block **270** and second block **271** extend generally along a common line and point in the same direction. This results in receiving space (or gap) **276** between the legs **192** of the first block **270** and second block **271** forming an opening shaped to accept the leg **192** of third block **279** (the third block **279** being like-formed as block **170**), when the third block **279** is oriented with its second side **176** pointed in an opposite direction of the second sides **176** of the first block **270** and second block **271**.

The free standing wall **262** can be constructed by using a plurality of blocks **170** arranged in multiple courses. It should be understood that FIG. **18** shows a top view of the free standing wall **262**, which can include multiple courses. Each course includes two rows **266**, **268**, of blocks **170**, with the blocks **170** in each row **266**, **268** laid end to end with the second side **176** of each block **170** forming a portion of an exposed face of the wall **262**. By "end to end", it is meant that one of the second end faces **180** of a first block (such as block **270**) will be adjacent and along side one of the first end faces **178** of a second block (such as block **271**). The leg **192** of each block **170** (such as block **279**) in a first of the rows **268** is between adjacent legs **192** of two blocks **170** (such as blocks **270**, **271**) in a second of the rows **266**.

In a further example of structures that can be made from the block **170**, reference is made to the column **252** of FIGS. **16** and **17**. The block **170** is configured and arranged such that when first block **256**, second block **257**, third block **258**, and fourth block **259**, each made in accordance with block **170**, are set next to each other: the first body end face **186** of the second block **257** is generally aligned with, and pointing in generally the same direction as, the second side **176** of the first block **256**; the third block **258** is next to, and in contact with, the second block **257**, with the first body end face **186** of the third block **258** generally aligned with, and pointing in generally the same direction as, the second side **176** of the second block **257**; the fourth block **259** is between, and in contact with, the third block **258** and first block **256** with the first body end face **186** of the fourth block **259** generally aligned with, and pointing in generally the same direction as, the second side **176** of the third block **258**; the first body end face **186** of the first block **256** is generally aligned with, and pointing in generally the same direction as, the second side **176** of the fourth block **259**; and gaps are formed between: (i) respective second portions **210** of the first side **174** of each of the first **256**, second **257**, third **258**, and fourth **259** blocks, and (ii) respective distal ends **419** of the leg **192** of each of the first **256**, second **257**, third **258**, and fourth **259** blocks. In preferred arrangements, the gap is formed by the part of the distal ends **419** being the respective first leg end face section **196***a* of each of the blocks **256**, **257**, **258**, and **259**. Each of the gaps is filled by a leg **192** of one of the first **256**, second **257**, third **258**, and fourth **259** blocks.

Of course, it should be noted that for the column **252** of FIG. **17**, the first bearing face **401** is also the face **401** that is the upper face **188** in use. In many preferred embodiments, the column **252** includes multiple courses **254**, and each course **254** will alternate between whether the first bearing face **401** or the second bearing face **402** is the upper face in use.

As can be seen in FIG. **16**, the column **252** is depicted with multiple courses **254**. Each course **254** includes four of the blocks **170** arranged in a rectangle, which can be a square, in the example shown. The second side **176** of each block **170** and the first end face **178** of an adjacent block forms a side of the column **252**. In some preferred arrangements, the second side **176** of each block **170** and the first end face **178** of each block **170** are formed by splitting and, thus, has split faces **186**, **184** respectively. The split faces **184**, **186** will form the side of the column **252**, in such arrangements.

In preferred arrangements, for advantageous constructions of the column **252**, the leg end face **196** of each block **170** is angled to match an angle of one of the first or second leg sides **408**, **409** (e.g., third extension angle **198**, fourth extension angle **199**) of an adjacent block **170**. The leg end face **196** can include, for example, fifth extension angle **200**, which can be within (plus or minus) 1 degree of fourth extension angle **199**. This construction will result in the blocks **170** being locked together to resist lateral movement of each of the blocks **170** in the course **254**.

As can be seen in FIG. **16**, the blocks **170** in one course **254** (for example, a second course **432**) are rotated 90 degrees around a vertical axis of the column **254** compared to the blocks **170** in an adjacent course **254** (for example, a first course **430**). In this example, the first course **430** is constructed with the first bearing face **401** as the upper face, and the next adjacent course, second course **432**, is arranged on top of the first course **430** using the second bearing face **402** as the upper face. This construction of the column **252** results in a running bond for the column **252**.

The above represents examples and principles. Many embodiments can be made utilizing these principles.

What is claimed is:

1. A building block comprising:

(a) an elongate body having opposite first and second sides, opposite first and second end faces extending between the first and second sides, and opposite first and second bearing faces extending between the first and second sides and the first and second end faces;

(i) the first bearing face being an upper face in use;

(ii) the first bearing face having a contact surface portion;

(iii) the second bearing face having a contact surface portion;

(A) the contact surface portion of the first bearing face and the contact surface portion of the second bearing face being substantially parallel to each other;

(b) the first side of the body defining a leg extending therefrom;

(i) the leg having a first leg side, an opposite second leg side, and a leg end face extending between the first leg side and second leg side;

(ii) the first side of the body having a first portion extending between the first end face and the first leg side;

(A) the first portion being angled at a first extension angle away from the second side of the body, as the first portion extends from the first leg side to the first end face, the first extension angle being non-zero;

(iii) the first side of the body having a second portion extending between the second end face and the second leg side;

(A) the second portion being angled at a second extension angle away from the second side of the body, as the second portion extends from the second leg side to the second end face, the second extension angle being non-zero;

(iv) the leg having a center plane that is substantially orthogonal to the first and second bearing faces, the center plane bisecting the leg;

(v) the first leg side diverging from the second leg side as the first leg side extends away from the first portion of the first side of the body;

(A) the first leg side extending away from the first portion at a third extension angle relative to the center plane, the third extension angle being non-zero;

(vi) the second leg side diverging from the first leg side as the second leg side extends away from the second portion of the first side of the body;

(B) the second leg side extending away from the second portion at a fourth extension angle, the fourth extension angle being non-zero;

(vii) the leg end face having a first leg end face section and second leg end face section;

(i) the first leg end face section being angled toward the second side at a fifth extension angle relative to a plane orthogonal to the leg center plane, the first leg end face section extending between the leg center plane and first leg side; and

(ii) the second leg end face section being angled toward the second side at a sixth extension angle relative to the plane orthogonal to the leg center plane, the second leg end face section extending between the leg center plane and the second leg side;

wherein the second extension angle, third extension angle, fourth extension angle, and fifth extension angle are within plus or minus five degrees of each other.

2. The block of claim **1** wherein:

(a) the block is made of dry cast concrete and the second side of the body is a split face.

3. The block of claim **2** wherein:

(a) the first end face of the body is a split face.

4. The block of claim **1** wherein:

(a) the second end face is angled at a non-zero angle in a direction toward the first end face, as the second end face extends from the second side of the body to the first side of the body.

5. The block of claim **1** wherein:

(a) the first extension angle, second extension angle, third extension angle, fourth extension angle, fifth extension angle and sixth extension angle are each less than 10 degrees.

6. The block of claim **1** wherein:

(a) the first extension angle, second extension angle, third extension angle, fourth extension angle, fifth extension angle and sixth extension angle are each within plus or minus 1 degree of each other.

7. The block of claim **1**, wherein the block is made from dry cast concrete.

8. A free standing wall comprising:

(a) a plurality of the block according to claim **1** arranged in multiple courses;

(i) each course comprising the blocks being in two rows, with the blocks in each row laid end to end with the second side of each block forming a portion of an exposed face of the wall, and the leg of each block in a first of the rows being between adjacent legs of two blocks in a second of the rows.

9. A column comprising: (a) a plurality of the block according to claim **1** arranged in multiple courses; (i) each course comprising four of the blocks arranged in a rectangle with the second side of each block and an end of an adjacent block forming a side of the column.

10. The column of claim **9** wherein:

(a) the leg end face of each block is angled to match an extension angle of one of the first or second leg sides of an adjacent block, whereby the blocks are locked together to resist lateral movement of each of the blocks in the course.

11. The column of claim **10** wherein: (a) the blocks in one of the courses of blocks are rotated 90 degrees around the vertical axis of the column from the blocks in an adjacent course.

12. The column according to claim **10**, wherein:

(a) the second side of one of the blocks, and the first end face of an adjacent block each has a split face and forms a side of the column.

13. A building block comprising:

(a) an elongate body having opposite first and second sides, opposite first and second end faces extending between the first and second sides, and opposite first and second bearing faces extending between the first and second sides and the first and second end faces;

(i) the first bearing face being an upper face in use;

(ii) the first bearing face having a contact surface portion;

(iii) the second bearing face having a contact surface portion;

(A) the contact surface portion of the first bearing face and the contact surface portion of the second bearing face being substantially parallel to each other;

(b) the first side of the body defining a leg extending therefrom;

(i) the leg having a first leg side, an opposite second leg side, and a leg end face extending between the first leg side and second leg side;

(ii) the first side of the body having a first portion extending between the first end face and the first leg side;

(A) the first portion being angled at a non-zero first extension angle away from the second side of the body;

(iii) the first side of the body having a second portion extending between the second end face and the second leg side;

(A) the second portion being angled at a non-zero second extension angle away from the second side of the body;

(iv) the leg having a leg plane that is substantially orthogonal to the contact surface portion of the first bearing face and the contact surface portion of the second bearing face;

(v) the first leg side diverging from the second leg side as the first leg side extends away from the first portion of the first side of the body;

(A) the first leg side extending away from the first portion at a non-zero third extension angle relative to the leg plane;

(vi) the second leg side diverging from the first leg side as the second leg side extends away from the second portion of the first side of the body;

(A) the second leg side extending away from the second portion at a non-zero fourth extension angle;

(vii) the leg end face having a first leg end face section and second leg end face section;

(i) the first leg end face section being angled toward the second side at a non-zero fifth extension angle relative to a plane orthogonal to the leg plane, the first leg end face section extending between the leg center plane and the first leg side; and

(ii) the second leg end face section being angled toward the second side at a non-zero sixth extension angle relative to the plane orthogonal to the leg plane, the second leg end face section extending between about the leg center plane and the second leg side;

wherein the second extension angle, third extension angle, fourth extension angle, and fifth extension angle are within plus or minus five degrees of each other.

14. The block of claim **13** wherein:

(a) the block is made of dry cast concrete and the second side of the body is a split face.

15. The block of claim **14** wherein:

(a) the first end face of the body is a split face.

16. The block of claim **13** wherein:

(a) the second end face is angled at a non-zero angle in a direction toward the first end face, as the second end face extends from the second side of the body to the first side of the body.

17. The block of claim **13** wherein:

(a) the first extension angle, second extension angle, third extension angle, fourth extension angle, fifth extension angle and sixth extension angle are each less than 10 degrees.

18. The block of claim **13** wherein:

(a) the first extension angle, second extension angle, third extension angle, fourth extension angle, fifth extension angle and sixth extension angle are each within plus or minus 5 degrees of each other.

19. A column comprising:

(a) a plurality of the block according to claim **13** arranged in multiple courses;

(i) each course comprising four of the blocks arranged in a rectangle with the second side of each block and an abutting end of an adjacent block forming a side of the column.

20. The column of claim **19** wherein:

(a) the leg end face of each block is angled to be substantially equal to an extension angle of one of the first or second leg sides of an adjacent block, whereby the blocks are locked together to resist lateral movement relative to each other of each of the blocks in the course.

21. The column of claim **20** wherein:

(a) the blocks in one of the courses of blocks are rotated 90 degrees around a vertical axis of the column from the blocks in an adjacent course.

22. The column according to claim **20**, wherein:

(a) the second side of one of the blocks, and the first end face of an adjacent block each has a split face and forms a side of the column.

* * * * *