US009297600B1

(12) **United States Patent**
Schafer

(10) **Patent No.: US 9,297,600 B1**
(45) **Date of Patent: *Mar. 29, 2016**

(54) **FIREARM CHOKE TUBE**

(71) Applicant: **Browning**, Morgan, UT (US)

(72) Inventor: **Nicholas P. Schafer**, Ogden, UT (US)

(73) Assignee: **BROWNING**, Morgan, UT (US)

(*) Notice: Subject to any disclaimer, the term of this patent is extended or adjusted under 35 U.S.C. 154(b) by 0 days.

This patent is subject to a terminal disclaimer.

(21) Appl. No.: **14/643,957**

(22) Filed: **Mar. 10, 2015**

Related U.S. Application Data

(63) Continuation of application No. 13/645,242, filed on Oct. 4, 2012, now Pat. No. 8,978,286.

(51) **Int. Cl.**
F41A 21/00 (2006.01)
F41A 21/40 (2006.01)
F41A 21/34 (2006.01)

(52) **U.S. Cl.**
CPC ***F41A 21/40*** (2013.01); ***F41A 21/34*** (2013.01)

(58) **Field of Classification Search**
CPC F41A 21/40; F41A 21/42; F41A 21/36; F41A 21/16; F41A 21/30; F41A 21/18; F41A 21/28; F41A 21/34
USPC 42/79
See application file for complete search history.

(56) **References Cited**

U.S. PATENT DOCUMENTS

1,455,661 A * 5/1923 Rhinehart 42/79
1,508,605 A * 9/1924 Legett et al. 42/79
1,679,048 A * 7/1928 Miller 42/79
1,773,260 A * 8/1930 Cutts 42/79
1,892,522 A * 12/1932 White 42/79
2,092,549 A 9/1937 Jung
2,092,649 A * 9/1937 Jung 42/79
RE20,956 E 12/1938 White
RE20,958 E * 12/1938 White 42/79
2,153,246 A * 4/1939 Gibson 42/79
2,270,592 A * 1/1942 Kitzmiller 42/79
2,465,400 A 4/1949 Ennis
2,466,400 A * 4/1949 Ennis 42/79
2,589,738 A * 3/1952 Sedberry 42/79
2,668,479 A * 2/1954 Batten 89/14.3
2,695,797 A * 11/1954 McCarthy et al. 285/88
2,700,839 A * 2/1955 Finlay et al. 42/79
2,847,788 A * 8/1958 Twigg 42/79
2,861,375 A * 11/1958 Rodick 42/79
2,864,194 A * 12/1958 Grahn 42/79
2,867,932 A * 1/1959 Keightley 42/79
2,894,348 A * 7/1959 Cutts 42/79
2,937,465 A * 5/1960 Denaux 42/79
3,045,378 A * 7/1962 Denaux 42/79
3,161,979 A * 12/1964 Lowe 42/79
4,644,930 A * 2/1987 Mainhardt 124/58
4,837,962 A * 6/1989 Longerot 42/90
4,951,409 A * 8/1990 Froid 42/90

(Continued)

Primary Examiner — Samir Abdosh
(74) *Attorney, Agent, or Firm* — Holland & Hart

(57) **ABSTRACT**

A firearm choke tube includes a cylindrical body, a choke interrupted thread section, and a locking tab. The choke interrupted thread section is positioned on an outer surface of the cylindrical body and configured to threadably engage an interrupted thread section of a barrel of a firearm to limit longitudinal movement of the cylindrical body relative to the barrel. The locking tab protrudes from the outer surface of the cylindrical body and is configured to interface with a detent formed in the barrel to limit rotational movement of the cylindrical body relative to the barrel.

13 Claims, 12 Drawing Sheets

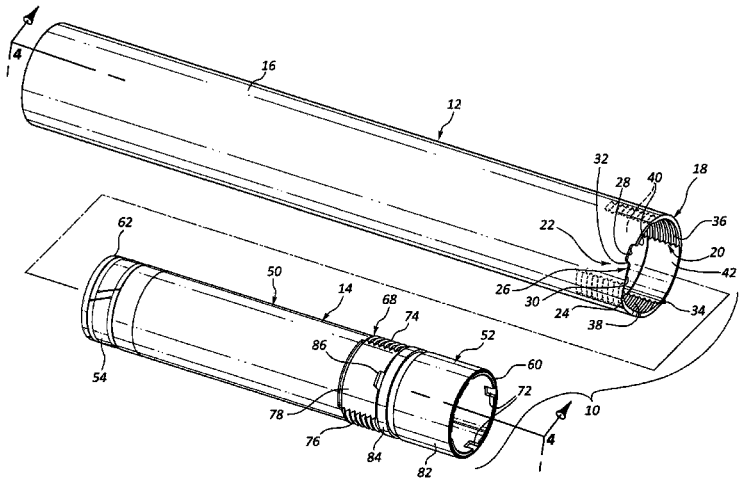

(56) **References Cited**

U.S. PATENT DOCUMENTS

6,052,935 A * 4/2000 Howard 42/79
6,557,290 B2 * 5/2003 Kumler 42/79
8,186,091 B2 5/2012 Mardaga et al.
2010/0275492 A1 * 11/2010 Moller et al. 42/79

* cited by examiner

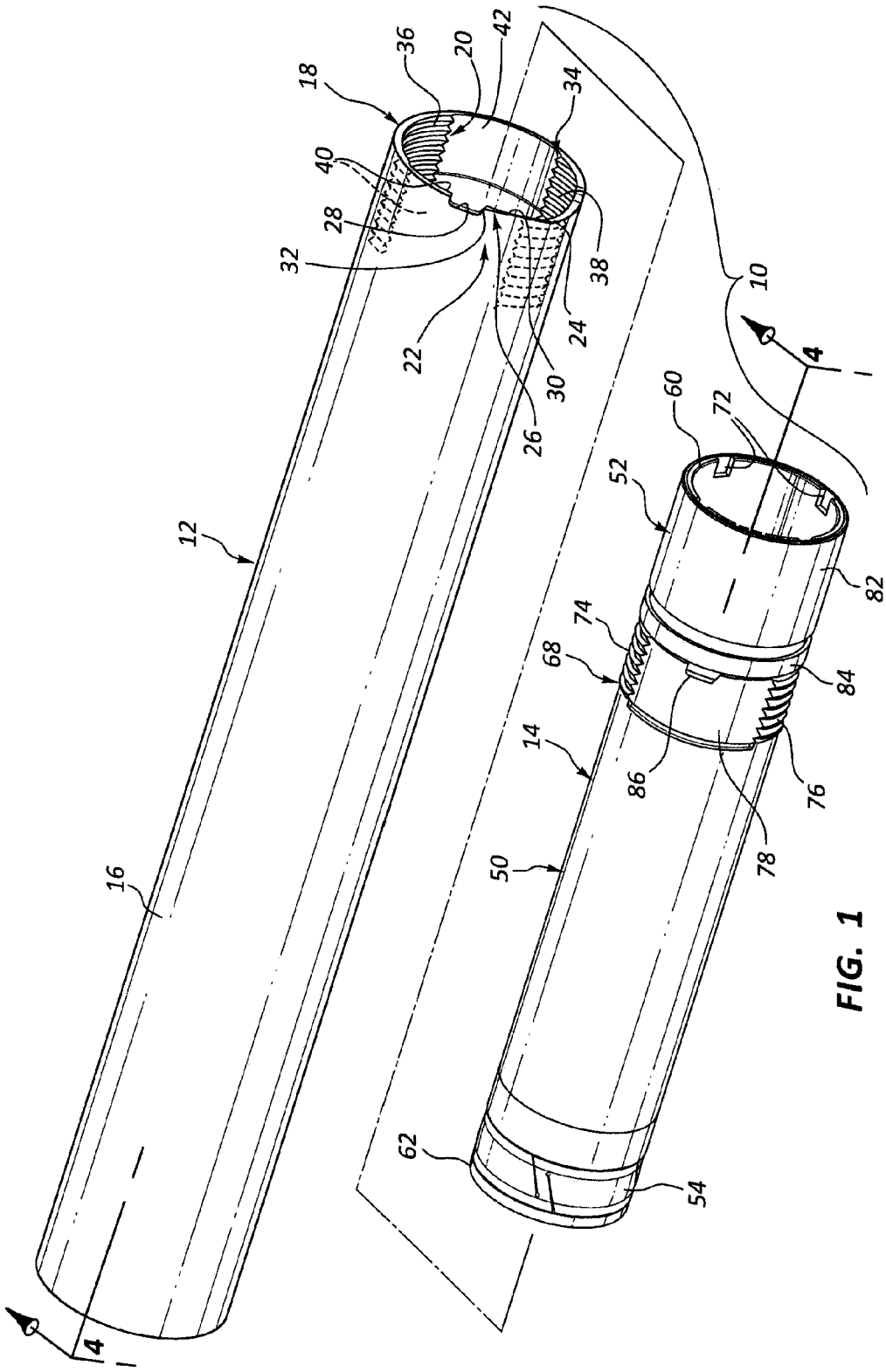
18
36
20
42
34
40
28
32
38
10
22
24
30
26
4
60
72
52
12
82
74
68
84
14
86
76
78
50
16
62
54
4

FIG. 1

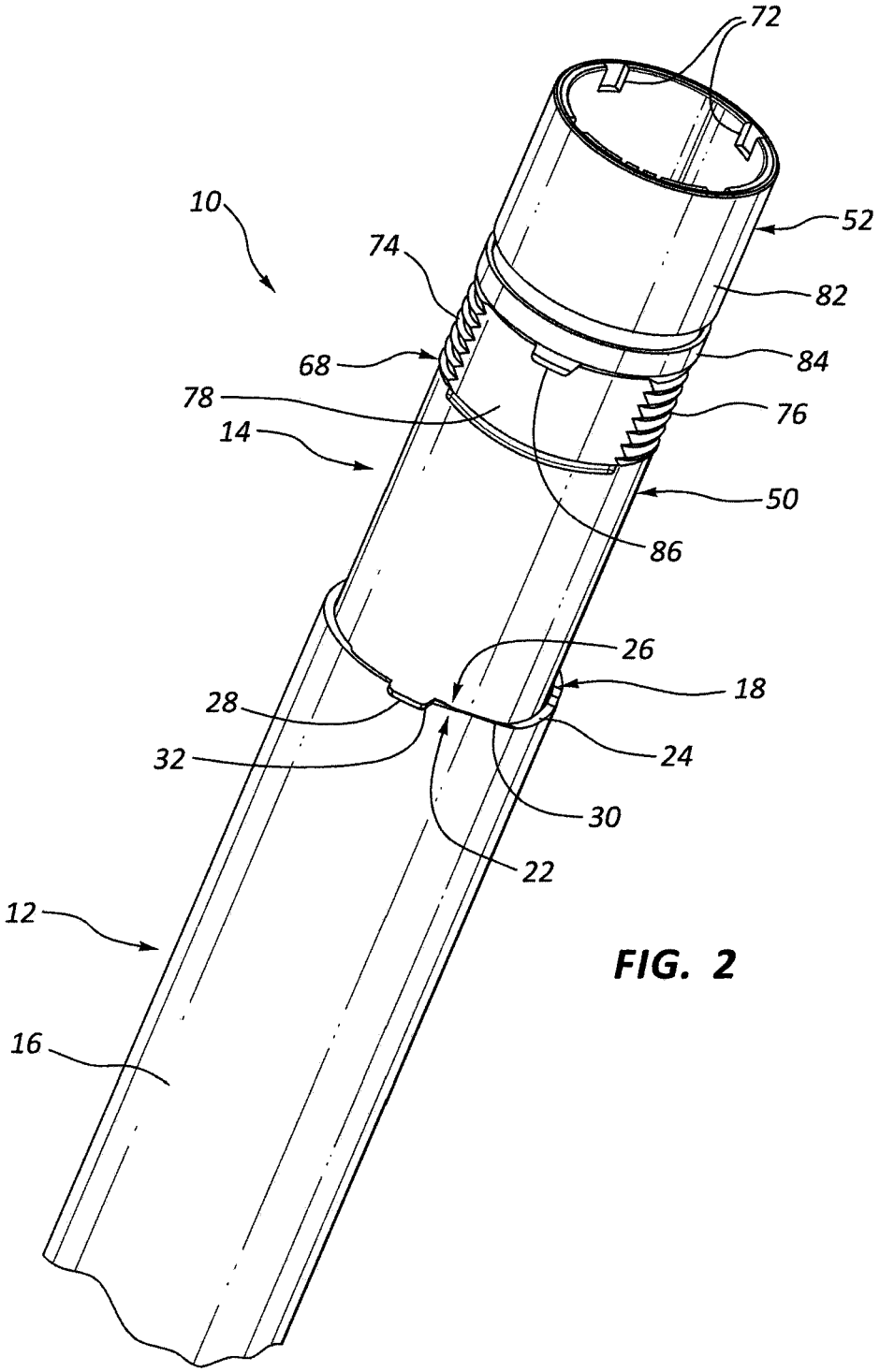

FIG. 2

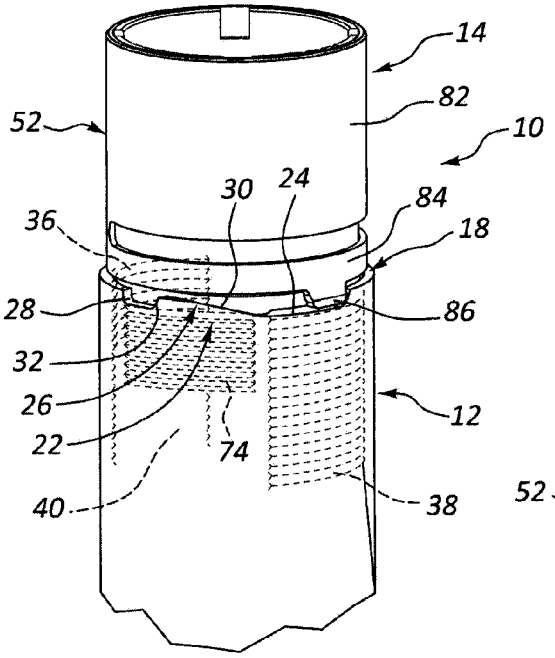

FIG. 3A

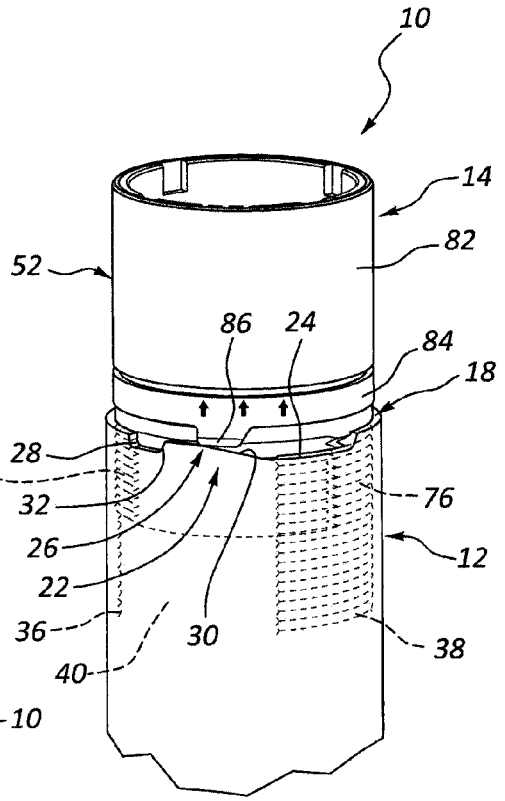

FIG. 3B

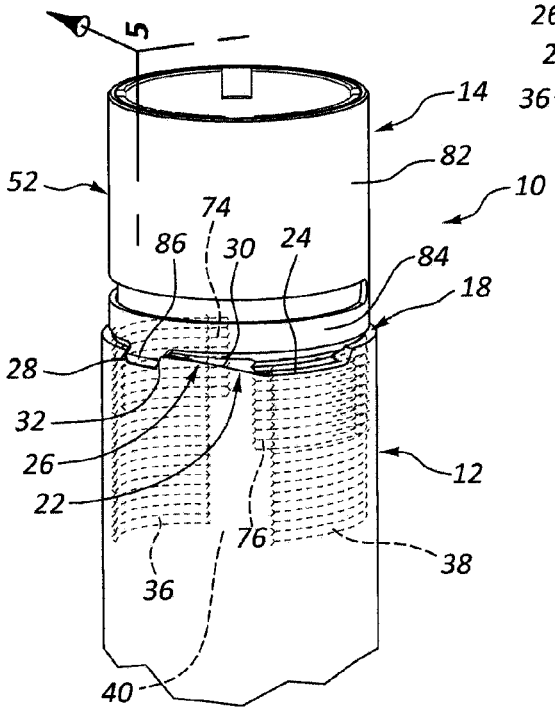

FIG. 3C

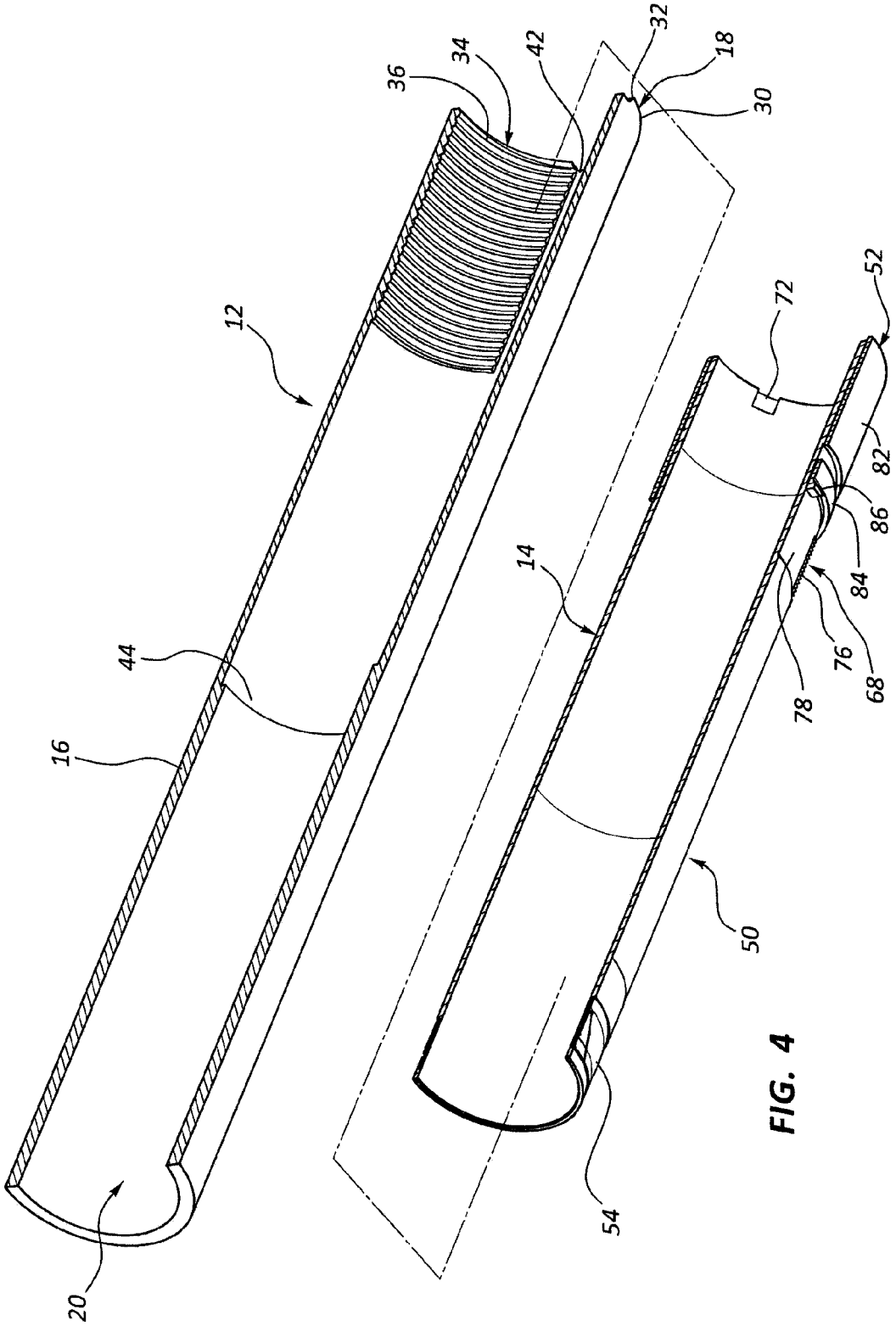

FIG. 4

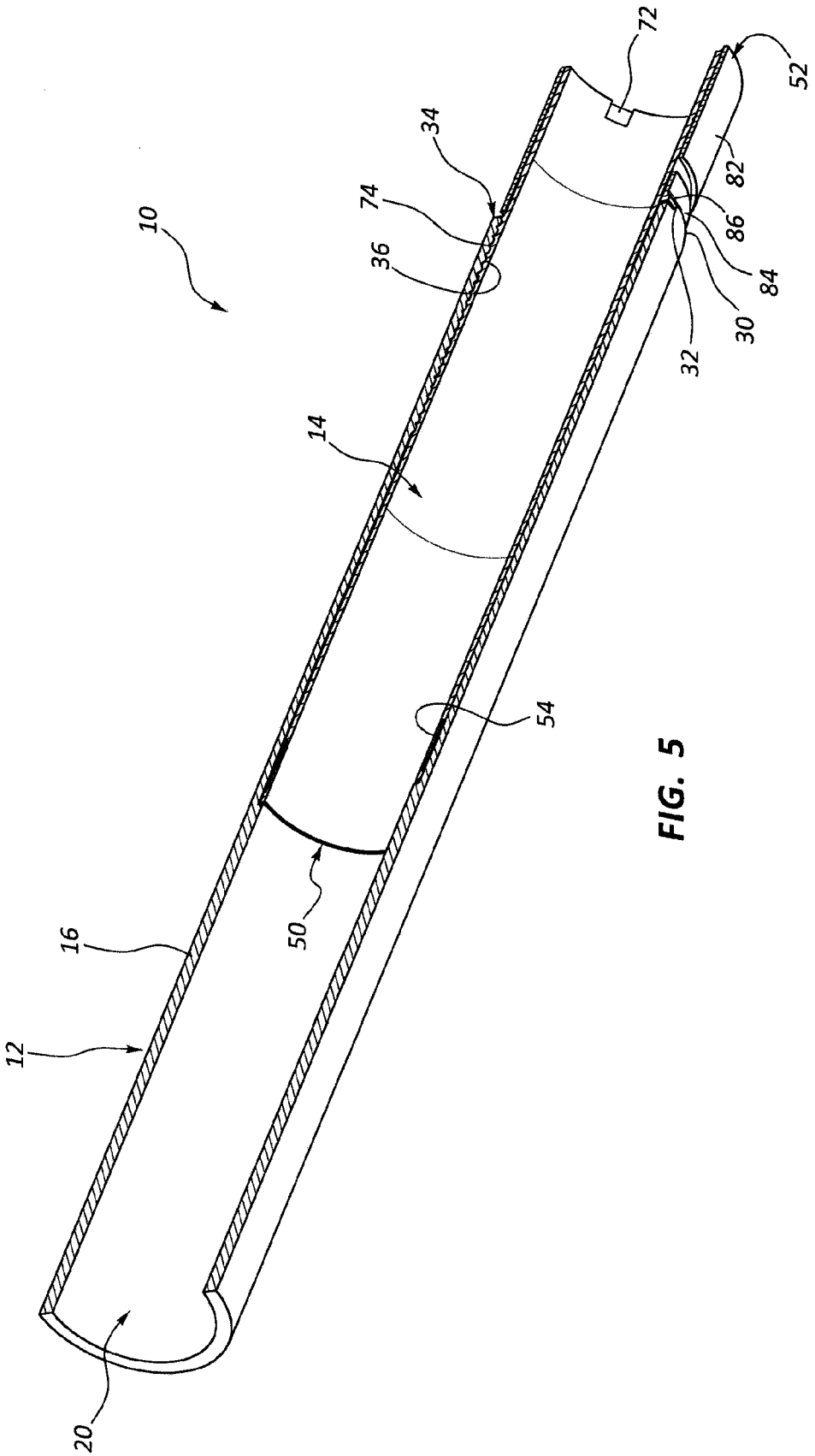

FIG. 5

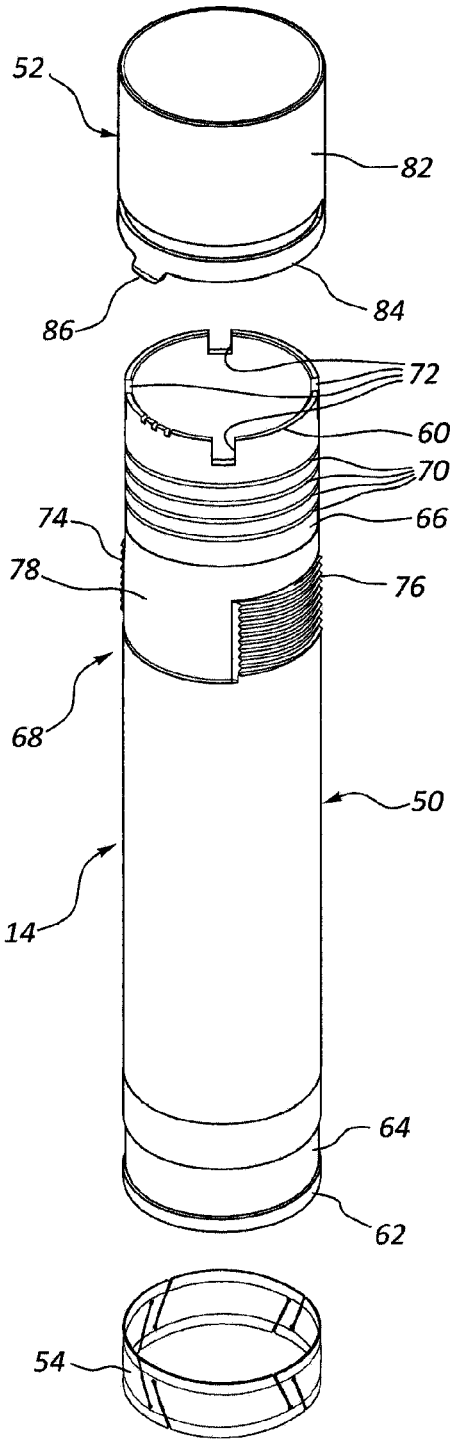
52
82
86
84
72
60
70
74
66
78
76
68
50
14
64
62
54

FIG. 6A

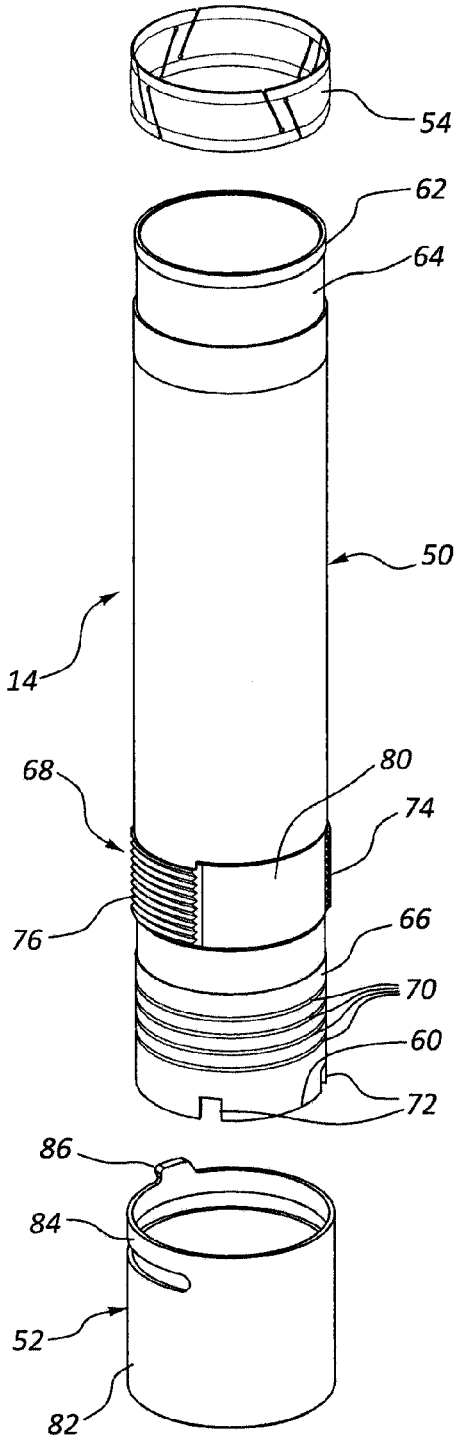
54
62
64
50
14
68
80
74
76
66
70
60
72
86
84
52
82

FIG. 6B

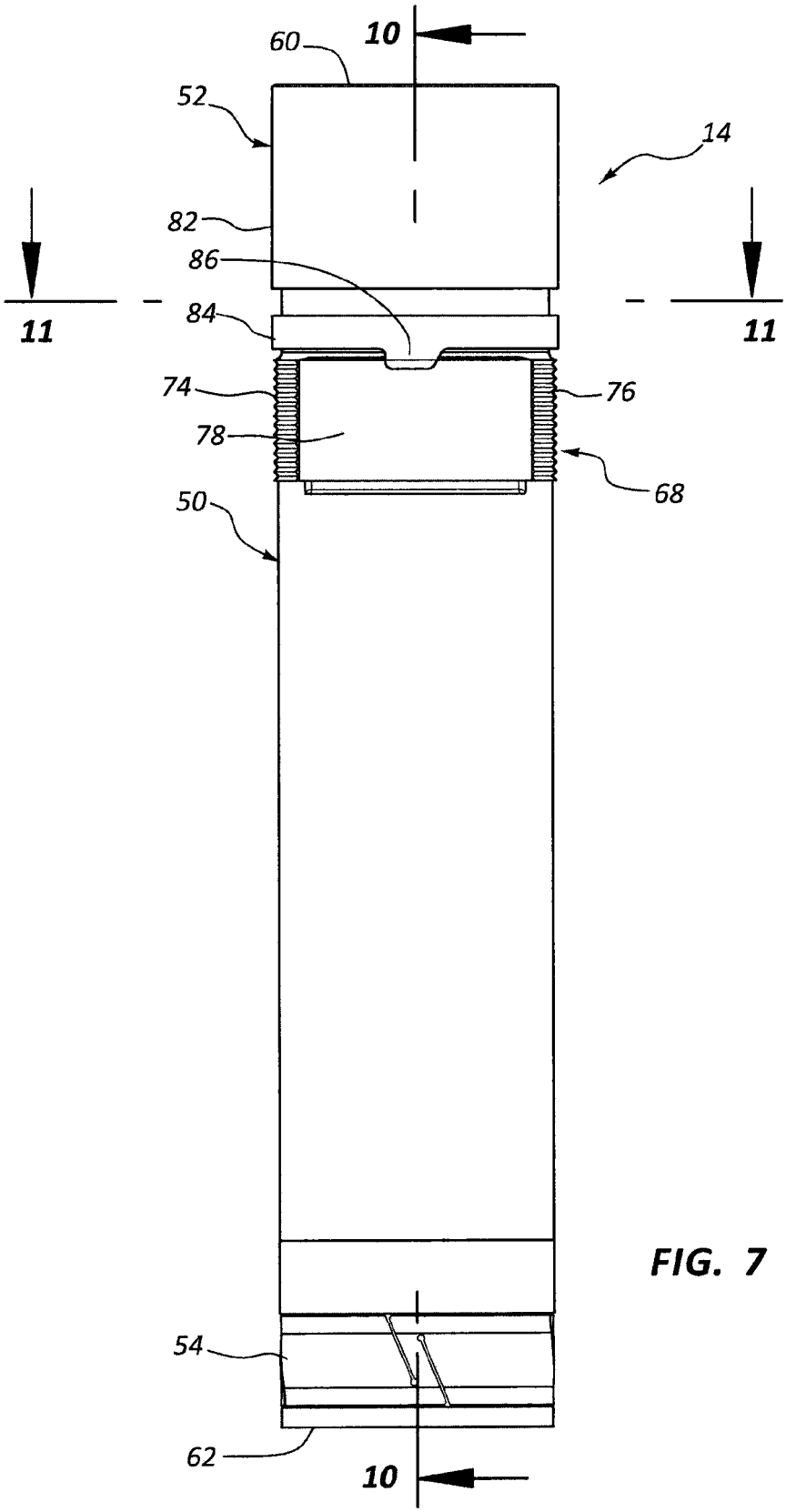

FIG. 7

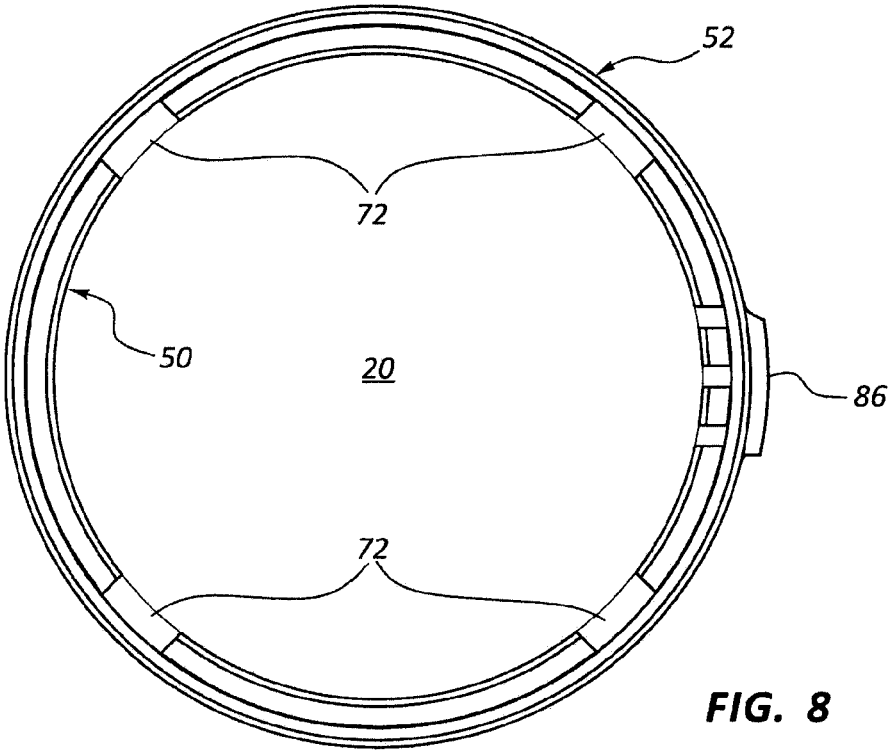

FIG. 8

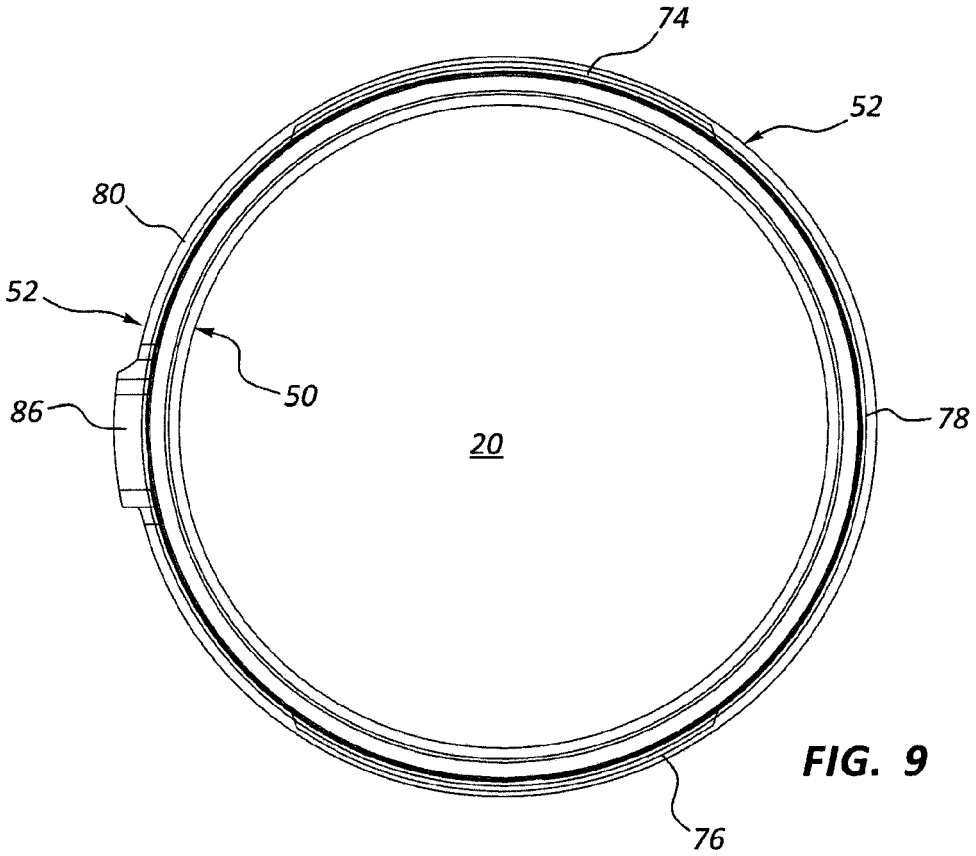

FIG. 9

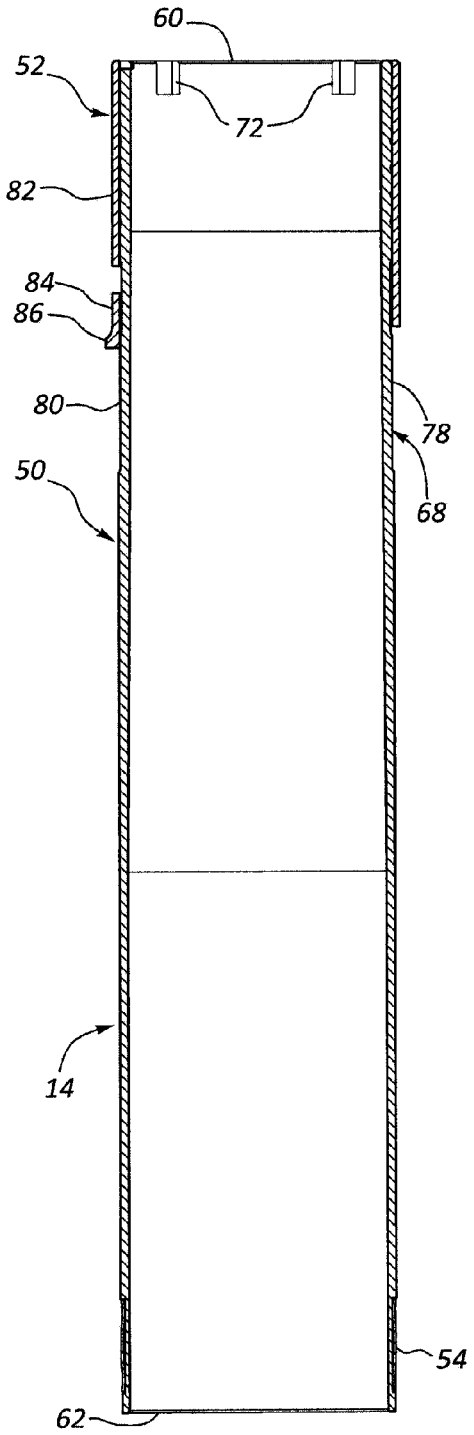

FIG. 10

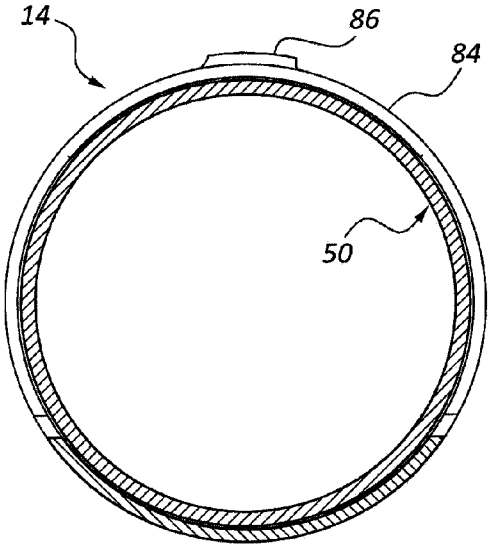

FIG. 11

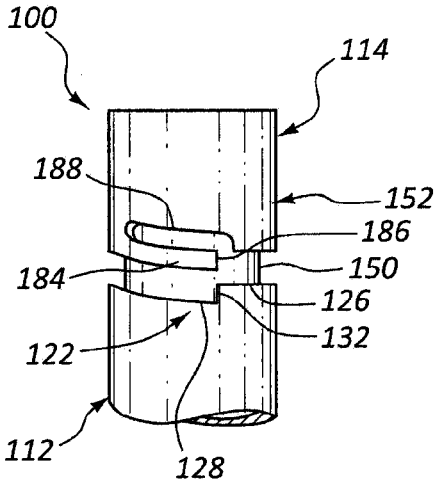

FIG. 12A

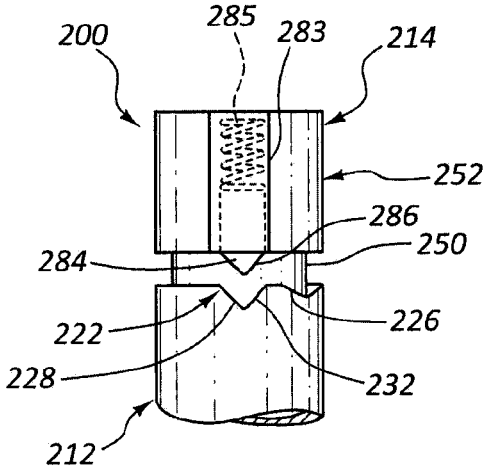

FIG. 12B

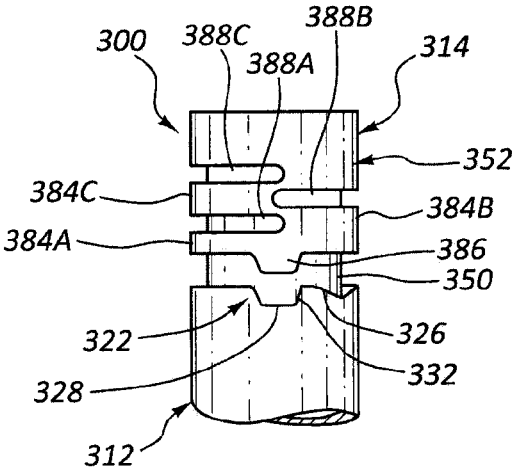

FIG. 12C

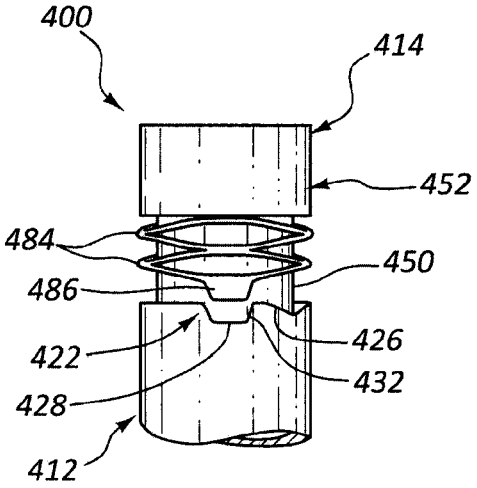

FIG. 12D

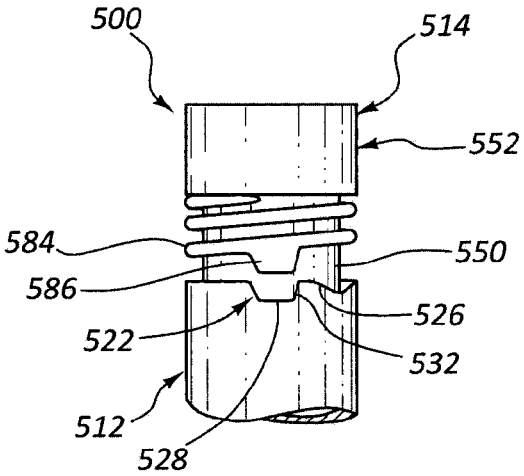

FIG. 12E

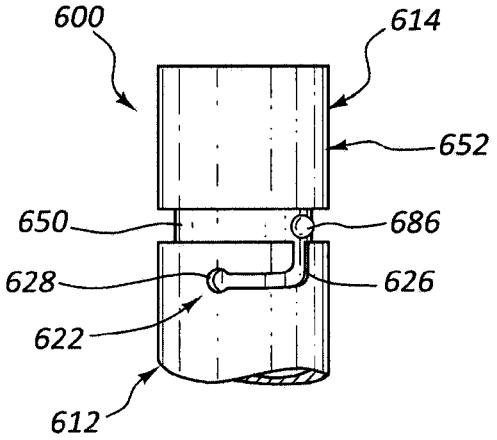

FIG. 12F

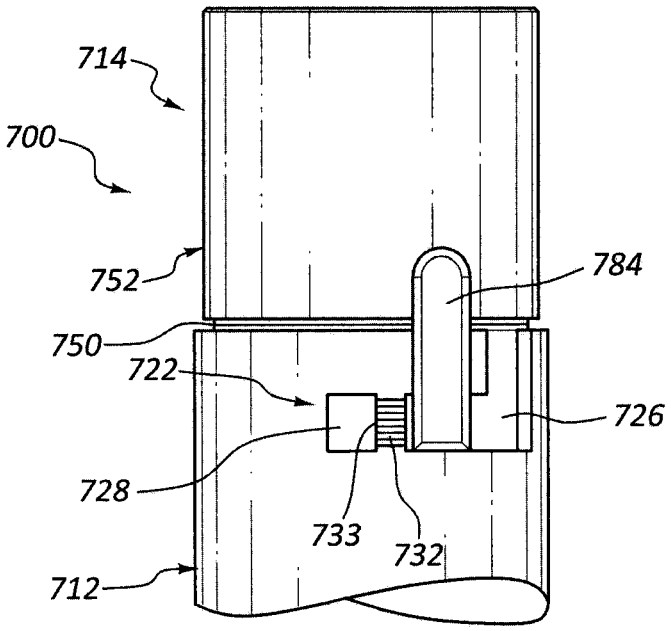

FIG. 13A

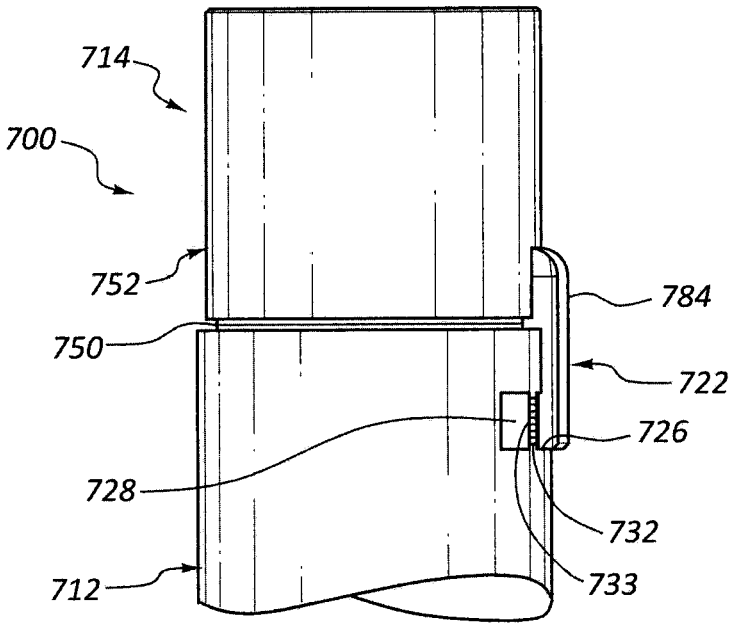

FIG. 13B

FIREARM CHOKE TUBE

RELATED APPLICATION

This is a continuation of U.S. patent application Ser. No. 13/645,242 filed on 4 Oct. 2012, now U.S. Pat. No. 8,978,286, issued on 17 Mar. 2015, the disclosure of which is incorporated, in its entirety, by this reference.

TECHNICAL FIELD

The present disclosure relates to devices that regulate the spread of shot or pellets leaving the muzzle of a shotgun, and more particularly relates to a shotgun choke tube that is easy to install and remove from the muzzle of a shotgun barrel.

BACKGROUND

A choke is a constriction located near the muzzle of a shotgun barrel that changes the patterning characteristics of a shot charge. Chokes have been used in firearms, and in particular shotguns, for many years to vary the percentage of pellets that will hit a given area of a target at a fixed distance from the muzzle. Some gun barrels have fixed chokes. Many shotguns utilize removable choke tubes so that the shooter can vary the shot pattern according to the game being hunted or the type of target shooting involved.

Removable chokes permit one shotgun to be used for a variety of shooting applications. For example, tight, i.e., smaller exit diameter, chokes are used to maintain a high percentage of the shot charge in a tight pattern at longer distances from the muzzle of the shotgun. This characteristic is desirable for long-range shooting situations encountered when, for example, hunting waterfowl. Tight chokes may also be desirable for some forms of trap shooting. At the other end of the spectrum, a wide shot dispersion may be desirable for short-range shooting situations such as skeet shooting.

The versatility provided by removable chokes involves certain tradeoffs. Many modern choke tubes are threaded inserts, which are secured in shotgun barrel muzzles by using approximately 0.5 inches of very fine, continuous threads. The selection of this thread style is necessitated by the limited wall thickness available for this threaded connection, and the need for a secure installation. A certain amount of thread engagement is required to help ensure that the choke tube will not loosen extensively or be expelled from the barrel during firing. To this end, many choke tubes are provided with continuous threads on their exterior surfaces. The barrel has a corresponding set of continuous threads located on its inner surface. Given this design configuration, a choke tube may require upwards of 20 revolutions for complete insertion or extraction. This process is time-consuming.

Some prior choke tubes have interrupted threads, which speed up the process by which the choke tube is threaded into the firearm barrel. Whether the choke tube has interrupted threads or not, there is a tendency for the choke tubes to loosen with use, which would have detrimental effects. Thus there is a need for a removable choke tube that a user may more easily insert and extract from a firearm using fewer revolutions, but that does not lend itself to excessive loosening or expulsion during use.

SUMMARY

One aspect of the present disclosure relates to a firearm choke tube that includes a cylindrical body, a choke interrupted thread section, and a locking tab. The choke interrupted thread section is positioned on an outer surface of the cylindrical body and configured to threadably engage an interrupted thread section of a barrel of a firearm to limit longitudinal movement of the cylindrical body relative to the barrel. The locking tab protrudes from the outer surface of the cylindrical body and is configured to interface with a detent or other interference type mating feature formed in the barrel to limit rotational movement of the cylindrical body relative to the barrel.

The choke interrupted thread section may include two or more thread portions spaced around a circumference of the cylindrical body. The two or more thread portions are separated circumferentially by a corresponding number of recessed portions that do not include threads. The locking tab may include a ramp portion having a contact surface that faces longitudinally. The detent may be positioned along a distal end surface of the barrel. The detent may include a recess sized to receive a rotational interference member such as the locking tab. The choke tube may include a seal positioned proximal of the choke interrupted thread section to provide a fluid tight seal with the barrel. The locking tab may be positioned distal of the choke interrupted thread section. Rotating the cylindrical body may simultaneously engage the choke interrupted thread section with the interrupted thread section of the barrel and cause the locking tab to interface with the detent. The choke tube may include a collar mounted to the cylindrical body, wherein the collar includes the locking tab.

Another aspect of the present disclosure relates to a firearm choke assembly that includes a firearm barrel and a choke tube insertable into the hollow bore. The firearm barrel includes a distal end surface and a hollow bore. The distal end surface includes a detent and the hollow bore including a barrel interrupted thread section. The choke tube includes a choke interrupted thread section and a locking tab arranged to interface with the detent. The choke tube, when inserted into the hollow bore, is rotatable to engage the choke interrupted thread section with the barrel interrupted thread section to limit longitudinal movement of the choke tube relative to the barrel. Rotation of the choke tube moves the locking tab into contact with the detent while engaging the mating thread sections to limit rotational movement of the choke tube relative to the barrel.

The detent may include a protrusion having a ramp portion, and a recess positioned adjacent the protrusion and sized to receive the locking tab. Rotating the choke tube about ¼ turn may concurrently engage the choke interrupted thread section with the barrel interrupted thread section and move the locking tab into contact with the detent. The detent may include a ramp portion and a recess portion, and moving the locking tab into contact with the detent includes moving the locking tab over the ramp portion and into the recess portion. The choke tube may include a cylindrical body and a collar positioned on an outer surface of the cylindrical body, wherein the collar includes the locking tab. The choke tube may include a cylindrical body, and a choke interrupted thread section formed on an outer surface of the cylindrical body.

A further aspect of the present disclosure relates to a method of releasably mounting a choke tube to a firearm barrel. The method includes providing the barrel with a first thread feature and a detent, and providing the choke tube with a second thread feature and a locking tab. The method also includes inserting the choke tube into the barrel and rotating the choke tube to concurrently engage the first and second thread features to restrict longitudinal movement of the choke

tube relative to the barrel, and interface the locking tab and detent to restrict rotational movement of the choke tube relative to the barrel.

The choke tube may include a cylindrical body and a collar positioned on the cylindrical body, wherein the second thread feature includes an interrupted thread section positioned on an outer surface of the cylindrical body, and the collar includes the locking tab. The detent may be formed in a distal end surface of the barrel and include a protrusion portion, wherein the interface of the locking tab with the detent includes moving the locking tab over the protrusion portion. The interface between the locking tab and detent may include contacting the detent with the locking tab, rotating the locking tab past at least a portion of the detent, and holding the locking tab in a fixed rotated position with the detent. The detent may include a protrusion portion and a recess formed in a distal end surface of the barrel, wherein the protrusion portion includes a leading ramp surface and a trailing ramp surface. Rotating the choke tube relative to the barrel may move the locking tab over the leading and trailing ramp surfaces and into the recess. Rotating the choke tube may include approximately a ¼ turn of rotation relative to the barrel.

The foregoing and other features, utilities, and advantages of the subject matter described herein will be apparent from the following more particular description of certain embodiments as illustrated in the accompanying drawings.

BRIEF DESCRIPTION OF THE DRAWINGS

FIG. **1** is an exploded view showing an example firearm choke assembly in accordance with the present disclosure.

FIG. **2** is a partially assembled view of the firearm choke assembly of FIG. **1**.

FIG. **3**A shows the firearm choke assembly of FIG. **1** assembled and in an unlocked position.

FIG. **3**B shows the firearm choke assembly of FIG. **1** in a partially locked position.

FIG. **3**C shows the firearm choke assembly of FIG. **1** in a fully locked position.

FIG. **4** is a cross-sectional view of the firearm choke assembly of FIG. **1** taken along cross-section indicators **4-4**.

FIG. **5** is a cross-sectional view of the firearm choke assembly of FIG. **3**C taken along cross-section indicators **5-5**.

FIGS. **6**A and **6**B are exploded perspective views of a choke tube assembly of the firearm choke assembly of FIG. **1**.

FIG. **7** is a side view of the choke tube assembly of FIGS. **6**A and **6**B assembled together.

FIG. **8** is a distal end view of the choke tube assembly of FIG. **7**.

FIG. **9** is a proximal end view of the choke tube assembly of FIG. **7**.

FIG. **10** is a cross-sectional view of the choke tube assembly of FIG. **7** taken along cross-section indicators **10-10**.

FIG. **11** is a cross-sectional view of the choke tube assembly of FIG. **7** taken along cross-section indicators **11-11**.

FIGS. **12**A-**12**F are side views of alternative locking features for a firearm choke assembly in accordance with the present disclosure.

FIGS. **13**A-**13**B are side views of alternative locking features for a firearm choke assembly in accordance with the present disclosure.

DETAILED DESCRIPTION

The present disclosure relates generally to choke tubes for use with firearms, and more particularly relates to a firearm choke assembly that includes a choke tube assembly that is releasably locked in position relative to a firearm barrel. The choke tube assembly includes a threaded section, which when threadably engaged with threads on an internal surface of the firearm barrel limits axial movement of the choke tube assembly relative to the firearm barrel. The choke tube assembly also includes a locking tab, which when rotated into a locked position limits rotational movement of the choke tube assembly relative to the firearm barrel.

The threaded section of the choke tube assembly may be part of a choke interrupted thread section that interfaces with a barrel interrupted thread section formed on an internal surface of the firearm barrel. The choke interrupted thread section, when in a first rotated position, interfaces with the barrel interrupted thread section to permit unobstructed insertion of the choke tube assembly into the firearm barrel. Once the choke tube assembly is inserted completely, the choke tube assembly is rotated to engage the threads of the choke interrupted thread section with the threads of the barrel interrupted thread section. In one example, the choke tube assembly is rotated ¼ turn relative to the firearm barrel to engage the choke interrupted thread section with the barrel interrupted thread section thereby restricting axial movement of the choke tube assembly relative to the firearm barrel.

The locking tab of the choke tube assembly may protrude radially outward from an outer surface of a choke tube of the choke tube assembly. The locking tab may interface with a detent feature formed in the firearm barrel. In one example, the detent feature is formed along a distal end surface of the firearm barrel. The detent may include a ramp member with a tab recess positioned directly adjacent to the ramp member. Rotating the choke tube assembly, once inserted into the firearm barrel with threads of the choke interrupted thread section arranged to engage the threads of the barrel-interrupted thread section, moves the locking tab over the ramp member and into the tab recess. The locking tab positioned within the tab recess cannot be removed out of the tab recess by normal operation of the firearm. The locking tab may be removed from the tab recess upon application of a rotation force applied by the operator of the firearm. The locking tab may be used to limit rotational movement of the choke tube assembly relative to the firearm barrel to hold the choke tube assembly in a locked position.

The firearm choke assembly may include various structures for the locking tab and detent to provide the desired rotational locking of the choke tube assembly relative to the firearm barrel. For example, the detent features may be formed in the firearm barrel at different locations besides along the distal end surface. In one example, the detent may be formed in an insert, collar, or other feature that is mounted to the firearm barrel and configured to interface with the locking tab of the choke tube assembly. In still further arrangements, the firearm barrel includes the locking tab while the choke tube assembly includes detent features that interface with the locking tab.

Typically, the locking tab and detent features of the firearm choke assembly described herein are most useful when used in combination with a threaded interface between the choke tube assembly and firearm barrel. While an interrupted thread section is disclosed herein as a preferred method of providing a threaded interface between the choke tube assembly and firearm barrel, other types of threaded connections are possible including, for example, the combined continuous thread section and interrupted thread section disclosed in U.S. Pat. No. 6,052,935, which is incorporated herein in its entirety by this reference. The use of an interrupted thread section may significantly reduce the time and effort required to threadably connect the choke tube assembly to the firearm barrel and

position the locking tab in a position wherein the locking tab may interface with the detent to provide a rotational lock between the choke tube assembly and firearm barrel.

Referring now to FIGS. **1-5**, an example firearm choke assembly **10** is shown including a firearm barrel **12** and a choke tube assembly **14**. The choke tube assembly **14** is inserted into a distal open end of the firearm barrel. When assembled, a portion of the choke tube assembly **14** is positioned within the firearm barrel **12** and a portion of the choke tube assembly **14** is positioned outside of the firearm barrel **12** (see FIGS. **3**A-**3**C).

The firearm barrel **12** includes an outer surface **16**, a distal end surface **18**, and a hollow bore **20** (see FIG. **1**). The distal end surface **18** includes a detent structure **22**. The detent structure **22** includes a tab recess **24**, a ramp member **26**, and a locking recess **28**. The ramp member **26** includes a leading ramp surface **30** adjacent to the tab recess **24**, and a trailing ramp surface **32** adjacent to the locking recess **28**. The leading ramp surface **30** may have a more gradual, small angle slope as compared to the sharper, high angle slope of the trailing ramp surface **32**. The leading ramp surface **30** may be constructed to permit relative rotation of the choke tube assembly **14** to the firearm barrel **12** when moving the choke tube assembly into a locked position. The steep slope of the trailing ramp surface **32** may make it more difficult to rotate the choke tube assembly out of the locked position during operation of the firearm.

The hollow bore **20** may include a barrel interrupted thread section **34** having first and second threaded portions **36**, **38** and first and second recessed portions **40**, **42**. The hollow bore **20** may also include a choke tube seat **44** that is recessed relative to the remaining portions of the hollow bore **20** located proximal of the choke tube seat **44**. The choke tube assembly **14**, when positioned within the hollow bore **20**, may reside within the choke tube seat **44** to be flush-mounted with the remaining portions of the firearm barrel **12** that are proximal of the choke tube seat **44** (see FIG. **4**).

The barrel interrupted thread section **34** includes two threaded portions and two recessed portions. In other examples, the barrel interrupted thread section **34** may include different numbers of threaded portions and recessed portions to accommodate the construction of the choke interrupted thread section of the choke tube assembly **14**, which will be described in further detail below.

The detent features having the ramp member and recesses formed at the distal end surface **18** may be provided at different locations on the firearm barrel **12** in other embodiments. For example, the firearm barrel **12** may include a channel or slot that is accessible through the distal end surface **18**, wherein the channel or slot includes a ramp member, at least one tab recess or other feature that permits locking of the choke tube assembly **14** in a rotational direction relative to the firearm barrel **12**.

The choke tube assembly **14** is shown in various views in FIGS. **1-11**. The choke tube assembly **14** includes a choke tube **50**, a collar **52**, and a seal member **54** (see FIG. **1**). The choke tube assembly **14** may be assembled together as a single unit that is inserted into the firearm barrel **12**. The collar **52** and seal member **54** may be separately mounted to the choke tube **50** and configured as replaceable parts for purposes of, for example, customizing performance of the choke tube assembly **14** and for maintenance. In some arrangements, once assembled, the choke tube assembly **14** has a permanent assembled construction wherein the collar **52** and seal member **54** are fixed to the choke tube **50**. In other arrangements, the choke tube assembly **14** is operable without at least one of the collar **52** and seal member **54**. For example, provisions may be made within the choke tube assembly **14** to provide adequate sealing without of the use of seal member **54**, thereby making the seal member **54** an optional feature of the choke assembly.

The choke tube **50** may include distal and proximal end portions **60**, **62**, a seal seat **64**, a collar seat **66**, and a choke interrupted thread section **68** (see FIGS. **6**A and **6**B). The seal seat **64** is sized to receive the seal member **54**. The seal member **54** may be configured and arranged to provide a fluid-tight seal with an inner surface of the firearm barrel **12** (i.e., within the choke tube seat **44**). The fluid-tight seal provided by seal member **54** may be particularly useful when the barrel and choke tube have mating interrupted threads, such as the barrel interrupted thread section **34** and choke interrupted thread section **68**. The seal member **54** may be less relevant when the barrel and choke tube have continuous threads, which when mated provide at least some fluid sealing of the choke tube assembly to the barrel.

The collar seat **66** may include a plurality of circumferential grooves **70** and a plurality of distal cutouts **72**. The collar seat **66** may be configured to receive the collar **52** and secure the collar **52** to the choke tube **50**. In some arrangements, the collar **52** is connected to the collar seat **66** using, for example, an adhesive, welding, a press-fit or interference fit, or any other desired connection feature.

The choke interrupted thread section **68** includes first and second threaded portions **74**, **76** and first and second recessed portions **78**, **80** (see FIGS. **6**A and **6**B). The choke interrupted thread section **68** may have similar dimensions for the first and second threaded portions **74**, **76** as the dimension of the first and second threaded portions **36**, **38** of the barrel interrupted thread section **34**. The choke interrupted thread section **68** may have similar dimensions for the first and second recessed portions **78**, **80** as the dimensions for the first and second recessed portions **40**, **42** of the barrel interrupted thread section **34**. The choke interrupted thread section **68** may have a size, shape, orientation, and other characteristics that provide mating with the barrel interrupted thread section **34**.

When inserting the choke tube assembly **14** into the firearm barrel **12**, the first and second threaded portion **74**, **76** are aligned with the first and second recessed portions **40**, **42**, and the first and second recessed portions **78**, **80** are aligned with the first and second threaded portions **36**, **38**. When the choke interrupted thread section **68** is aligned with the barrel interrupted thread section **34**, the choke tube assembly **14** may be inserted axially into the firearm barrel **12** until the choke interrupted thread section **68** is aligned adjacent to the barrel interrupted thread section **34**. Thereafter, rotating the choke tube assembly **14** relative to the firearm barrel **12** engages the first and second threaded portions **74**, **76** with the first and second threaded portions **36**, **38**, respectively. This threaded engagement restricts relative axial movement between the choke tube assembly **14** and the firearm barrel **12**.

Operation of the firearm to shoot ammunition imposes significant stress, heat, and vibration on the firearm choke assembly **10**, which in some circumstances results in the choke tube assembly **14** rotating relative to the firearm barrel **12**. This relative rotation may occur inadvertently upon use of the firearm until the threads of the choke interrupted thread section **68** disengage from the threads of the barrel interrupted thread section **34** allowing the choke tube assembly **14** to disconnect from the firearm barrel **12**. The use of the locking tab feature of the choke tube assembly **14** described above and in further detail below restricts such inadvertent relative rotation between the choke tube assembly **14** and firearm barrel **12** during use of the firearm.

The collar **52** includes a base portion **82**, flex arm **84**, and locking tab **86**. The locking tab **86** is mounted to and extends from the flex arm **84**. The flex arm **84** permits some axial movement of the locking tab **86** relative to base portion **82**. The flex arm **84** is connected to the base portion **82** at a circumferential location spaced opposite from the locking tab **86** (see FIGS. **6**A, **6**B and **11**). The flex arm **84** may act as a cantilever arm or a spring that returns to a rest position after an externally applied force is removed.

Referring to FIGS. **3**A-**3**C, the locking tab **86** is shown interfacing with the detent **22** to lock the choke tube assembly **14** to the firearm barrel **12**. FIG. **3**A shows the choke tube assembly **14** inserted into the firearm barrel **12** until the locking tab **86** is positioned within the tab recess **24**. In this longitudinal and rotational position, the choke tube assembly **14** is in an unlocked position relative to the firearm barrel **12**. The first and second threaded portions **74**, **76** and first and second threaded portions **36**, **38** have not yet engaged to provide a threaded connection between the choke tube assembly **14** and firearm barrel **12**, and the locking tab **86** has not yet moved into a locked rotated position relative to detent **22**. As such, the choke tube assembly **14** may be moved axially and rotationally relative to the firearm barrel **12** while in the position shown in FIG. **3**A.

FIG. **3**B shows the choke tube assembly **14** partially rotated toward a locked position. The locking tab **86** is rotated from the tab recess **24** into contact with the ramp member **26**. The locking tab **86** moves along the leading ramp surface **30** of the ramp member **26**. In the position shown in FIG. **3**B, the flex arm **84** flexes or moves axially to permit the locking tab **86** to move axially as the locking tab **86** moves along the leading ramp surface **30** of the ramp member **26**. The flex arm **84** may be referred to as a biasing member or spring that automatically moves axially away from the ramp member **26** and then automatically returns in the opposite axial direction after the locking tab **86** moves into the locking recess **28** upon rotation of the choke tube assembly **14**.

The threads of the choke interrupted thread section **68** begin initial engagement with threads of the barrel interrupted thread section **34** as the choke tube assembly **14** rotates relative to the firearm barrel **12** to contact locking tab **86** with ramp member **26**.

FIG. **3**C shows the locking tab **86** positioned within the locking recess **28**. The flex arm **84** has automatically moved back to its original axial position (e.g., the position when the locking tab **86** is positioned in the tab recess **24** as shown in FIG. **3**A). The choke tube assembly **14** is in a rotational locked position relative to the firearm barrel **12**. The choke tube assembly **14** is also locked in an axial position relative to firearm barrel **12** by engagement of the first and second threaded portions **74**, **76** with the first and second threaded portions **36**, **38**, respectively. The choke tube assembly **14** has rotated through approximately ¼ turn relative to firearm barrel **12** to move the locking tab **86** into the locked position and to move the threads of the choke interrupted thread section **68** into engagement with threads of the barrel interrupted thread section **34**.

Different amounts of relative rotation may be used in other examples in order to move the locking tab **86** into a locked position and to engage the threads of the choke interrupted thread section **68** with threads of the barrel interrupted thread section **34**. In one example, the rotation is in the range of about ⅛ turn to about ½ turn, and more preferably about ⅙ turn to about ⅓ turn.

The locking tab **86** may be moved out of the locking recess **28** upon application of a rotational force in an opposite direction. The rotational force required to move the locking tab **86** out of the locking recess **28** is typically greater than any rotational force applied during normal use of the firearm. The locking tab **86** moves over the trailing ramp surface **32**, along the leading ramp surface **30**, and into the tab recess **24**. Once the locking tab **86** is in the tab recess **24** (see FIG. **3**A), the first and second threaded portions **74**, **76** are disengaged from the first and second threaded portions **36**, **38**, respectively, so that the choke tube assembly **14** may move axially relative to firearm barrel **12** for removal of the choke tube assembly **14**.

The collar **52** is constructed to provide movement of the locking tab **86** via the flex arm **84** in an axial direction after engagement of threads of the choke interrupted thread section **68** and barrel interrupted thread section **34**. In other arrangements, the locking tab **86** itself may be elastically movable as the locking tab **86** moves along the ramp member **26** and into and out of the locking recess **28**. The locking tab **86** may provide movement in an axial direction without use of the flex arm **84** as a result of a construction of the locking tab **86** or an attachment configuration of the locking tab **86** to the base portion **82**.

As described above, the mounting of locking tab **86** and detent **22** may be switched so that the locking tab **86** is carried by the firearm barrel **12** and the features of detent **22** are carried by the choke tube assembly **14**. Further, while the locking tab **86** is shown in the figures being provided on a collar **52** that is separate from the choke tube **50**, other arrangements are possible in which the locking tab **86** is integrally formed as single piece with a choke tube **50**.

In still further examples, the detent may be constructed without a ramp member. The detent may include only a locking recess within which the locking tab moves into and out of at a certain rotated position of the choke tube assembly **14** relative to the firearm barrel **12**. In one example, the locking tab **86** is automatically biased toward the locking recess **28** when the choke tube assembly **14** is inserted into the firearm barrel **12** to an axial position in which the choke interrupted thread section **68** is positioned to engage threads of the barrel interrupted thread section **34**.

Other locking features are possible to provide a locked rotated position of the choke tube assembly relative to the firearm barrel. The locking tab and detent features disclosed herein are merely exemplary and may be replaced with other features that will lock the choke tube assembly **14** rotationally relative to the firearm barrel **12**, and provide unlocking so that the choke tube assembly may be removed from the firearm barrel as desired. Likewise, other features besides threads or interrupted thread sections may be used to lock the choke tube assembly **14** axially relative to barrel **12**, and provide unlocking for removal of the choke tube assembly.

FIGS. **12**A-**12**F illustrate several additional exemplary locking features for choke tube assemblies. FIG. **12**A shows a firearm choke tube assembly **100** that includes a firearm barrel **112** and a choke tube assembly **114**. The firearm barrel **112** includes a detent feature **122** having a ramp member **126** and a locking recess **128**. The ramp member **126** includes a trailing ramp surface **132**. The choke tube assembly **114** includes a choke tube **150** and a collar **152**. The collar **152** is mounted to the choke tube **150** and includes a flex arm **184**. The flex arm **184** includes a tab surface **186**. The firearm barrel **122** and choke tube assembly **114** may include interrupted thread sections such as the barrel interrupted thread section **34** and choke interrupted thread section **68** described above with reference to the firearm choke assembly **10**. The flex arm **184** flexes axially into a cutout **188** as the choke tube assembly **114** rotates relative to the firearm barrel **112**. Once the tab surface **186** moves past the trailing ramp surface **132**, the flex arm **184** moves into the locking recess **128**. The tab

surface **186** contacts the trailing ramp surface **132** to resist reverse rotation of the choke tube assembly **114** relative to the firearm barrel **112**.

FIG. **12**B shows another example firearm choke assembly **200** that includes a firearm barrel **212** and a choke tube assembly **214**. The firearm barrel **212** includes a detent **222** having a ramp member **226** and a locking recess **228**. The ramp member **226** includes a trailing ramp surface **232**. The trailing ramp surface **232** may be part of the locking recess **228**.

The choke tube assembly **214** includes a choke tube **250** and a collar **252**. The collar **252** is mounted to the choke tube **250** and includes a follower **284** having a tab surface **286**. The follower **284** moves axially within a housing **283** mounted to an exterior surface or within a wall of the collar **252**. The follower **284** moves against forces applied by a biasing member **285**, which biases the follower **284** toward the detent **222**.

As with the other example firearm choke assemblies described with reference to FIGS. **12**A-**12**F, the firearm choke assembly **200** may include interrupted thread sections that provide a threaded interface between the firearm barrel **212** and choke tube assembly **214**. As the choke tube assembly **214** rotates relative to the firearm barrel **212**, the follower moves along the ramp member **226** and into the locking recess **228**. The follower **284** moves axially as the follower member **284** moves along the ramp member **226** and into the locking recess **228** against biasing forces applied by the biasing member **285**. Once the follower **284** is positioned within the locking recess **228**, the tab surface **286** contacts the trailing ramp surface **232** to resist reverse rotation of the choke tube assembly **214** relative to the firearm barrel **212**.

FIG. **12**C shows another example firearm choke assembly **300** including a firearm barrel **312** and a choke tube assembly **314**. The firearm barrel **312** includes a ramp member **326** and a locking recess **328**. The ramp member **326** includes a trailing ramp surface **332**. The choke tube assembly **314** includes a choke tube **350** and a collar **352**. The collar **352** includes a plurality of flex arms **384**A-**384**C defined at least in part by a plurality of cutouts **388**A-**388**C. A locking tab **386** is carried at least in part by the flex arm **384**A. During rotation of the choke tube assembly **314** relative to the firearm barrel **312**, the flex arms **384**A-**384**C provide at least some elastic flexing that permits the locking tab **386** to move along the ramp member **326** and then drop into the locking recess **328**. The locking tab **386** contacts the trailing ramp surface **332** to resist reverse rotation of the choke tube assembly **314** relative to the firearm barrel **312**.

FIG. **12**D shows another example firearm choke assembly **400** including a firearm barrel **412** and a choke tube assembly **414**. The firearm barrel **412** includes a detent **422** having a ramp member **426** and a locking recess **428**. A ramp member **426** includes a trailing ramp surface **432**. The choke tube assembly **414** includes a choke tube **450** and a collar **452**. The collar **452** includes a flex arm **484** in the form of a spring member. A locking tab **486** is carried by the flex arm **484**. The flex arm **484** permits the locking tab **486** to move axially relative to the firearm barrel **412** as the choke tube assembly **414** rotates relative to the firearm barrel **412**. The locking tab **486** moves along the ramp member **426** and drops into the locking recess **428**. The locking tab **486** contacts the trailing ramp surface **432** to resist reverse rotation of the choke tube assembly **414** relative to the firearm barrel **412**.

FIG. **12**E shows a firearm choke assembly **500** including a firearm barrel **512** and a choke tube assembly **514**. The firearm barrel **512** includes a detent **522** having a ramp member **526** and a locking recess **528**. Ramp member **526** includes a trailing ramp surface **532**. The choke tube assembly **514** includes a choke tube **550** and a collar **552** mounted to the choke tube **550**. The collar **552** includes a flex arm **584** in the form of a helical shaped spring. A locking tab **586** is carried by the flex arm **584**. The firearm choke tube assembly **514** rotates relative to the firearm barrel **512** to move the locking tab **586** along the ramp member **526** and into the locking recess **528**. Contact between a locking tab **586** and the trailing ramp surface **532** resists reverse rotation of the choke tube assembly **514** relative to the firearm barrel **512**.

FIG. **12**F shows a firearm choke assembly **600** including a firearm barrel **612** and a choke tube assembly **614**. The firearm barrel **612** includes a detent **622** having a track **626** that leads to a locking recess **628**. The choke tube assembly **614** includes a choke tube **650** and a collar **652**. A locking tab **686** may be mounted to either the choke tube **650** or the collar **652**. The locking tab **686** may be in the form of a protrusion that is sized and arranged to travel along the track **622** and into the locking recess **628** upon relative rotation between the choke tube assembly **614** and firearm barrel **612**. The locking recess **628** may be sized, shaped and arranged such that the locking tab **686** is held therein to resist reverse rotation of the choke tube assembly **614** relative to the firearm barrel **612**.

FIGS. **13**A and **13**B show another example firearm choke assembly **700** including a firearm barrel **712** and a choke tube assembly **714**. The firearm barrel **712** includes a detent **722** having a track **726** and a locking recess **728**. Track **726** includes a ramp **732** that leads into the locking recess **728**. The choke tube assembly **714** includes a choke tube **750** and a collar **752** mounted to the choke tube **750**. The collar **752** includes a flex arm **784** that carries a locking tab **786**. The locking tab **786** travels along the track **726**, over the ramp **732**, and into the locking recess **728** as part of connecting the choke tube assembly **714** to the firearm barrel **712**. Contact between the locking tab **786** and a trailing ramp surface **733** of the locking recess **728** resists reverse rotation of the choke tube assembly **714** relative to the firearm barrel **712**. FIG. **13**B shows the flex arm **784** extending outside of an outer profile of the firearm barrel **712**.

In each of the examples of FIGS. **12**A-**13**B, an additional force may be applied to the choke tube assembly **614** to move the locking tab out of the locking recess. This additional force may be a force applied directly to the locking tab or some other portion of the flex arm or collar of the choke tube assembly. The additional force may be a force applied in a direction different from a force typically applied when the firearm is shot (e.g., an axial force applied to the choke tube assembly in a direction away from the firearm barrel).

As is illustrated by the several examples of FIGS. **1**-**13**B, there are many different ways in which a choke tube assembly may be releasably secured to a firearm barrel in a way that resists inadvertent relative rotation between the choke tube assembly and firearm barrel in at least one rotation direction. The example shown in the figures are some of the many ways in which interrupted thread sections may be used with a firearm choke assembly without inadvertent disconnection of the choke tube assembly from the firearm barrel.

In one alternative example, also referred to as a reversed locking mechanism, the locking tab is carried by the firearm barrel and the detent structure is carried by the choke tube assembly. The firearm barrel may include a flex arm or other structure that provides at least some axial movement of the locking tab as the locking tab moves into a locking recess of the detent of the choke tube assembly. In some arrangements, the locking tab alone includes sufficient flexibility (e.g., elastic deformation) that permits at least some axial movement without the need for a separate flex arm formed in or carried

by the firearm barrel. The detent structure may be formed in a collar of the choke tube assembly or directly in a choke tube of the choke tube assembly.

The terms recited in the claims should be given their ordinary and customary meaning as determined by reference to relevant entries (e.g., definition of "plane" as a carpenter's tool would not be relevant to the use of the term "plane" when used to refer to an airplane, etc.) in dictionaries (e.g., widely used general reference dictionaries and/or relevant technical dictionaries), commonly understood meanings by those in the art, etc., with the understanding that the broadest meaning imparted by any one or combination of these sources should be given to the claim terms (e.g., two or more relevant dictionary entries should be combined to provide the broadest meaning of the combination of entries, etc.) subject only to the following exceptions: (a) if a term is used herein in a manner more expansive than its ordinary and customary meaning, the term should be given its ordinary and customary meaning plus the additional expansive meaning, or (b) if a term has been explicitly defined to have a different meaning by reciting the term followed by the phrase "as used herein shall mean" or similar language (e.g., "herein this term means," "as defined herein," "for the purposes of this disclosure [the term] shall mean," etc.). References to specific examples, use of "i.e.," use of the word "invention," etc., are not meant to invoke exception (b) or otherwise restrict the scope of the recited claim terms. Other than situations where exception (b) applies, nothing contained herein should be considered a disclaimer or disavowal of claim scope. The subject matter recited in the claims is not coextensive with and should not be interpreted to be coextensive with any particular embodiment, feature, or combination of features shown herein. This is true even if only a single embodiment of the particular feature or combination of features is illustrated and described herein. Thus, the appended claims should be read to be given their broadest interpretation in view of the prior art and the ordinary meaning of the claim terms.

As used herein, spatial or directional terms, such as "left," "right," "front," "back," and the like, relate to the subject matter as it is shown in the drawing figures. However, it is to be understood that the subject matter described herein may assume various alternative orientations and, accordingly, such terms are not to be considered as limiting. Furthermore, as used herein (i.e., in the claims and the specification), articles such as "the," "a," and "an" can connote the singular or plural. Also, as used herein, the word "or" when used without a preceding "either" (or other similar language indicating that "or" is unequivocally meant to be exclusive—e.g., only one of x or y, etc.) shall be interpreted to be inclusive (e.g., "x or y" means one or both x or y). Likewise, as used herein, the term "and/or" shall also be interpreted to be inclusive (e.g., "x and/or y" means one or both x or y). In situations where "and/or" or "or" are used as a conjunction for a group of three or more items, the group should be interpreted to include one item alone, all of the items together, or any combination or number of the items. Moreover, terms used in the specification and claims such as have, having, include, and including should be construed to be synonymous with the terms comprise and comprising.

Unless otherwise indicated, all numbers or expressions, such as those expressing dimensions, physical characteristics, etc. used in the specification (other than the claims) are understood as modified in all instances by the term "approximately." At the very least, and not as an attempt to limit the application of the doctrine of equivalents to the claims, each numerical parameter recited in the specification or claims which is modified by the term "approximately" should at least be construed in light of the number of recited significant digits and by applying ordinary rounding techniques. Moreover, all ranges disclosed herein are to be understood to encompass and provide support for claims that recite any and all subranges or any and all individual values subsumed therein. For example, a stated range of 1 to 10 should be considered to include and provide support for claims that recite any and all subranges or individual values that are between and/or inclusive of the minimum value of 1 and the maximum value of 10; that is, all subranges beginning with a minimum value of 1 or more and ending with a maximum value of 10 or less (e.g., 5.5 to 10, 2.34 to 3.56, and so forth) or any values from 1 to 10 (e.g., 3, 5.8, 9.9994, and so forth).

What is claimed is:

1. A firearm choke tube for attachment to a muzzle end of a firearm barrel, the firearm choke tube comprising:

a cylindrical body;

a choke thread section positioned on an outer surface of the cylindrical body and configured to threadably engage an thread section of a muzzle end of a barrel of a firearm to limit longitudinal movement of the cylindrical body relative to the barrel;

a locking tab protruding from the outer surface of the cylindrical body and configured to interface with a detent formed in the barrel to limit rotational movement of the cylindrical body relative to the barrel.

2. The firearm choke tube of claim **1** wherein the locking tab includes a ramp portion facing longitudinally.

3. The firearm choke tube of claim **1** wherein the detent is positioned along a distal end surface of the barrel.

4. The firearm choke tube of claim **1** wherein the detent includes a recess sized to receive the locking tab.

5. The firearm choke tube of claim **1** further comprising a seal positioned proximal of the choke thread section.

6. The firearm choke tube of claim **1** wherein the locking tab is positioned distal of the choke thread section.

7. The firearm choke tube of claim **1** wherein rotating the cylindrical body simultaneously engages the choke thread section with the thread section of the barrel and causes the locking tab to interface with the detent.

8. The firearm choke tube of claim **1** further comprising a collar mounted to the cylindrical body, the collar including the locking tab.

9. A firearm choke assembly, comprising:

a firearm barrel having a distal end surface at a muzzle end and a hollow bore, the distal end surface including a detent and the hollow bore including a barrel thread section;

a choke tube insertable into the hollow bore and comprising:

a choke thread section;

a locking tab arranged to interface with the detent;

wherein the choke tube, when inserted into the hollow bore, is rotatable to engage the choke thread section with the barrel thread section to limit longitudinal movement of the choke tube relative to the barrel, and rotation of the choke tube moves the locking tab into contact with the detent while engaging the mating thread sections to limit rotational movement of the choke tube relative to the barrel.

10. The firearm choke assembly of claim **9** wherein the detent includes a protrusion having a ramp portion, and a recess positioned adjacent the protrusion and sized to receive the locking tab.

11. The firearm choke assembly of claim **10** wherein the detent includes a ramp portion and a recess portion, and

moving the locking tab into contact with the detent includes moving the locking tab over the ramp portion and into the recess portion.

12. The firearm choke assembly of claim **10** wherein the choke tube includes a cylindrical body and a collar positioned on an outer surface of the cylindrical body, the collar including the locking tab.

13. The firearm choke assembly of claim **10** wherein the choke tube includes a cylindrical body, and the choke thread section is formed on an outer surface of the cylindrical body.

* * * * *