US009271200B2

(12) **United States Patent**
Suh et al.

(10) **Patent No.: US 9,271,200 B2**
(45) **Date of Patent: *Feb. 23, 2016**

(54) **METHOD AND SYSTEM FOR MANAGING SECURITY IN MOBILE COMMUNICATION SYSTEM**

(71) Applicant: **Samsung Electronics Co., Ltd.**, Suwon-si, Gyeonggi-do (KR)

(72) Inventors: **Kyung-Joo Suh**, Seoul (KR); **Chae-Gwon Lim**, Seoul (KR)

(73) Assignee: **Samsung Electronics Co., Ltd.**, Suwon-si (KR)

(*) Notice: Subject to any disclaimer, the term of this patent is extended or adjusted under 35 U.S.C. 154(b) by 0 days.

This patent is subject to a terminal disclaimer.

(21) Appl. No.: **14/844,737**

(22) Filed: **Sep. 3, 2015**

(65) **Prior Publication Data**

US 2015/0382253 A1 Dec. 31, 2015

Related U.S. Application Data

(63) Continuation of application No. 14/532,421, filed on Nov. 4, 2014, now Pat. No. 9,131,380, which is a continuation of application No. 13/504,786, filed as application No. PCT/KR2010/007430 on Oct. 27, 2010, now Pat. No. 8,881,237.

(30) **Foreign Application Priority Data**

Oct. 27, 2009 (KR) 10-2009-0102501

(51) **Int. Cl.**

G06F 21/00	(2013.01)
H04L 29/06	(2006.01)
H04W 36/00	(2009.01)
H04W 12/06	(2009.01)
H04W 60/00	(2009.01)
H04W 36/14	(2009.01)
H04W 8/10	(2009.01)

(Continued)

(52) **U.S. Cl.**
CPC ***H04W 36/0038*** (2013.01); ***H04W 12/06*** (2013.01); ***H04W 36/0016*** (2013.01); ***H04W 60/00*** (2013.01); *H04W 84/042* (2013.01)

(58) **Field of Classification Search**
CPC H04W 36/0038; H04W 36/0016; H04W 12/06; H04W 60/00; H04W 84/042
See application file for complete search history.

(56) **References Cited**

U.S. PATENT DOCUMENTS

8,144,877	B2	3/2012	Yang et al.
2008/0267407	A1	10/2008	Vanderveen

(Continued)

FOREIGN PATENT DOCUMENTS

EP	1 860 904	A1	11/2007	
EP	2007162	A2 *	12/2008	..... H04W 36/0016
EP	2 018 083	A1	1/2009	

OTHER PUBLICATIONS

Myungseok Song; Jae-Young Choi; Jun-dong Cho; Jongpil Jeong; Byung-Hun Song; Hyungsu Lee; "Reduction of authentication cost based on key caching for inter-MME handover support"; High Performance Computing & Simulation (HPCS), 2014 International Conference on Year: Apr. 2014; pp. 885-892.*

(Continued)

Primary Examiner — Amir Mehrmanesh
Assistant Examiner — Courtney Fields
(74) *Attorney, Agent, or Firm* — Jefferson IP Law, LLP

(57) **ABSTRACT**

A method, an apparatus, and a system for solving and managing security problems, which may occur during a handover of a User Equipment (UE) between PLMNs in a mobile communication network, by using a Non-Access Stratum (NAS) protocol are provided. By the method, a UE can perform a security mode command and an authentication with a network. Further, the method can prevent interruption of communication due to authentication or security during a handover of a UE between Public Land Mobile Networks (PLMNs).

31 Claims, 11 Drawing Sheets

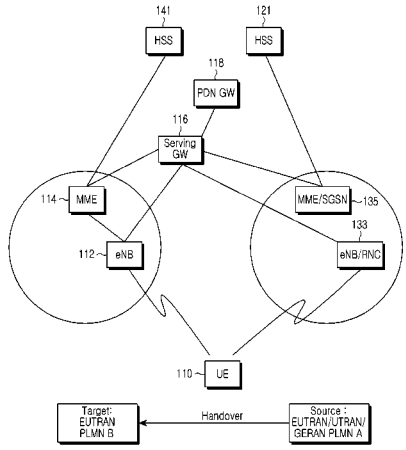

(51) **Int. Cl.**
H04W 84/04 (2009.01)

(56) **References Cited**

U.S. PATENT DOCUMENTS

2009/0061878	A1	3/2009	Fischer
2009/0305699	A1	12/2009	Deshpande et al.
2010/0054472	A1	3/2010	Barany et al.
2010/0081435	A1	4/2010	Huang

OTHER PUBLICATIONS

Mitjana et al., "Background Scan Mechanism whereby PLMN is able to instruct a capable mobile terminal to perform regular attempts"; SIEMENS AG; IPCOM000125707D; Jul. 2005; pp. 1-2.

Jeong et al., "HIMALIS-C-ITS: Fast and secure mobility management scheme based on HIMALIS for cooperative ITS service in future networks", Ubiquitous and Future Networks (ICUFN), 2013 Fifth International Conference on year, Jan. 2013, pp. 60-65.

* cited by examiner

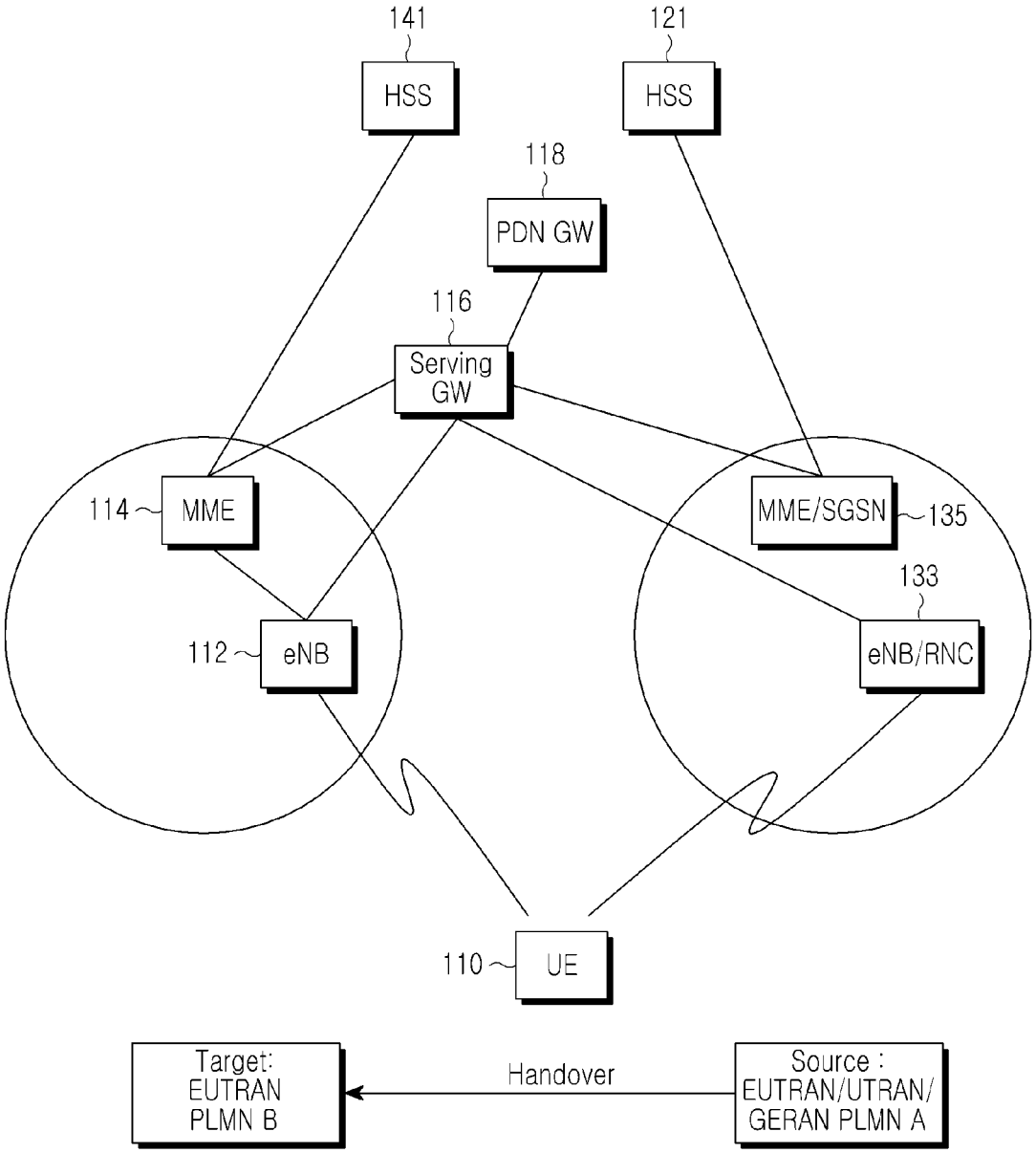
141
HSS
121
HSS
118
PDN GW
116
Serving GW
114
MME
MME/SGSN
135
133
112
eNB
eNB/RNC
110
UE
Target: EUTRAN PLMN B
Handover
Source : EUTRAN/UTRAN/ GERAN PLMN A

FIG.1

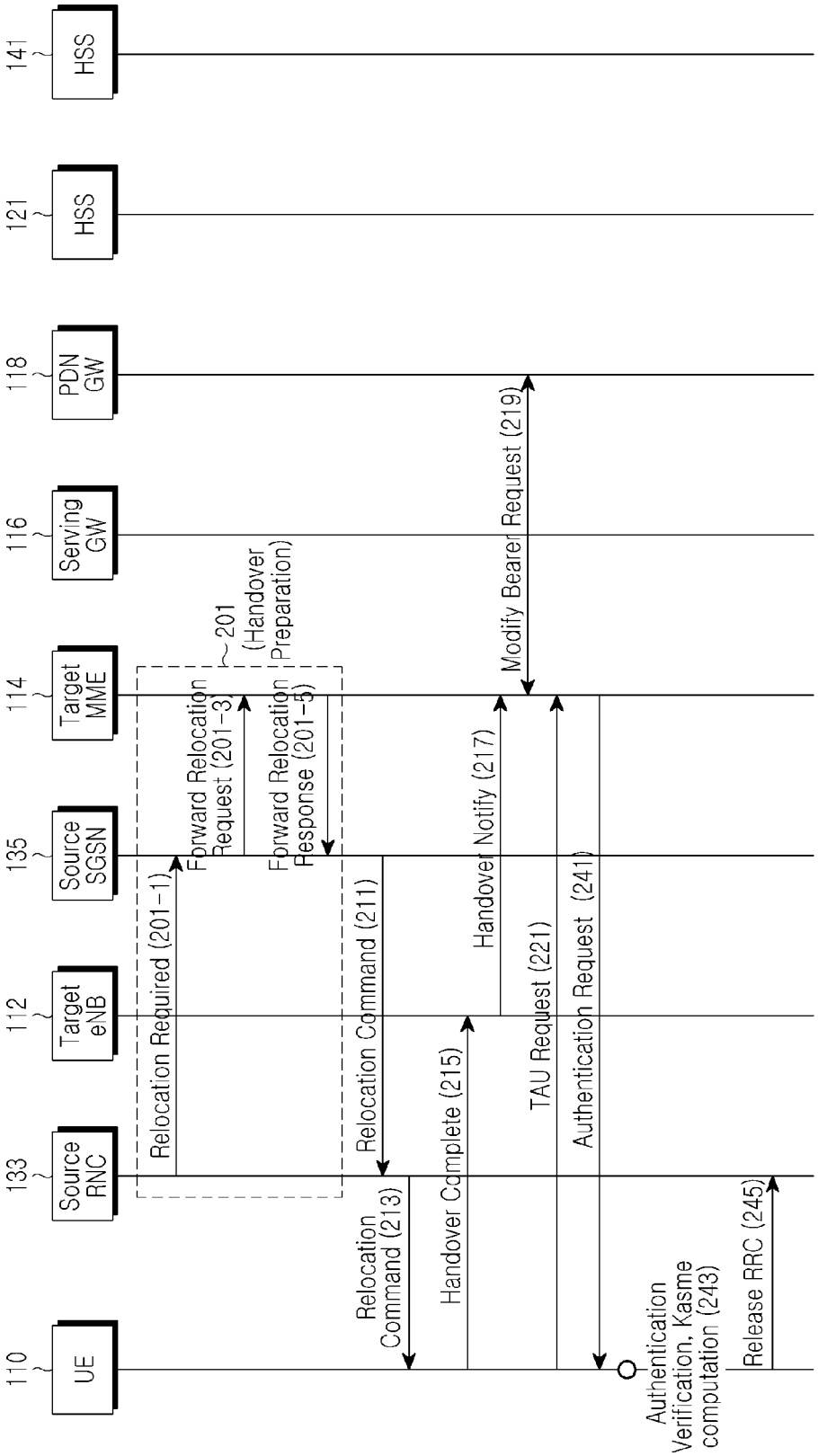
110
UE
133
Source RNC
112
Target eNB
135
Source SGSN
114
Target MME
116
Serving GW
118
PDN GW
121
HSS
141
HSS
Relocation Required (201-1)
Forward Relocation Request (201-3)
201 (Handover Preparation)
Forward Relocation Response (201-5)
Relocation Command (211)
Relocation Command (213)
Handover Complete (215)
Handover Notify (217)
Modify Bearer Request (219)
TAU Request (221)
Authentication Request (241)
Authentication Verification, Kasme computation (243)
Release RRC (245)

FIG. 2

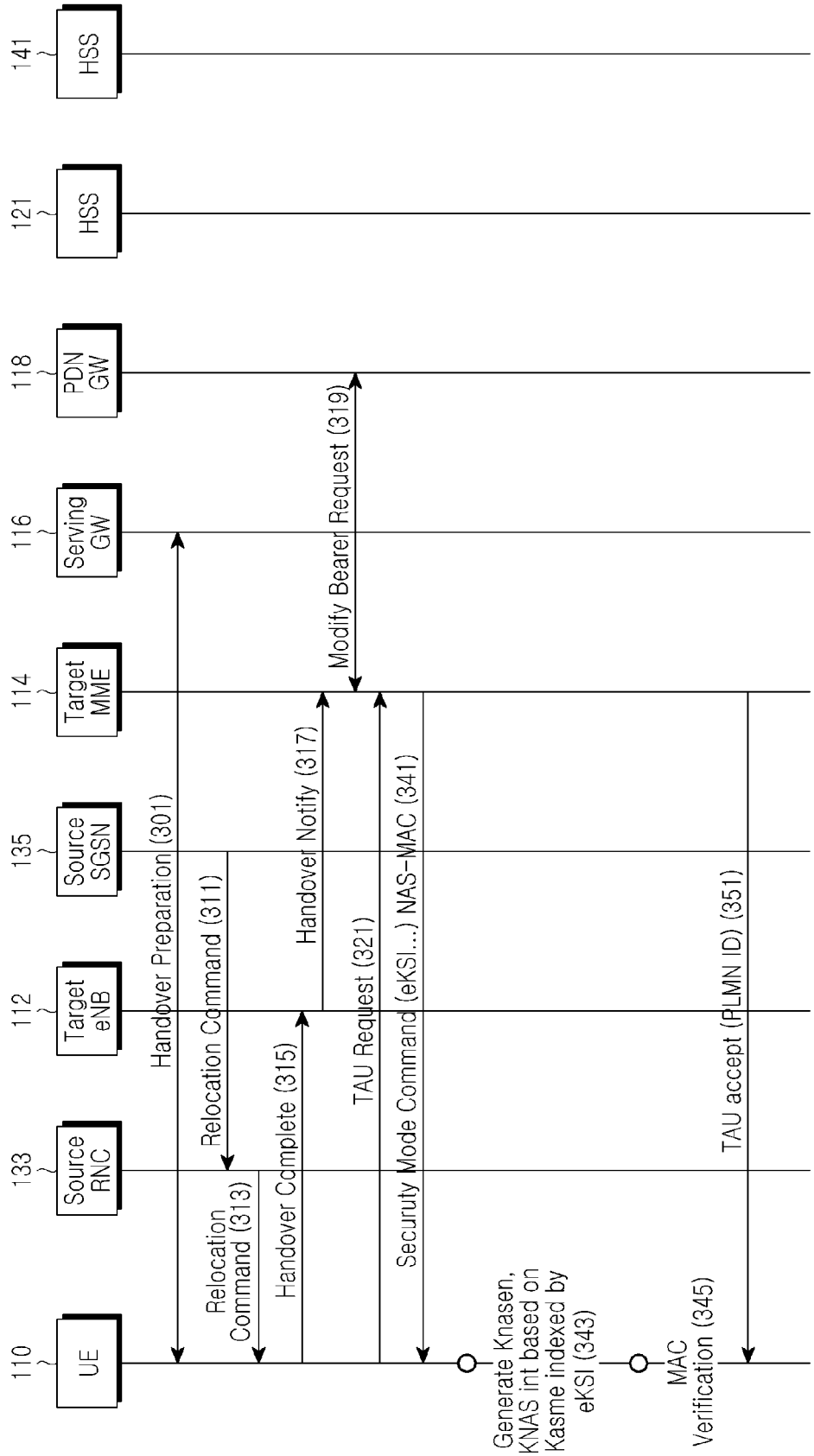
110
UE
133
Source RNC
112
Target eNB
135
Source SGSN
114
Target MME
116
Serving GW
118
PDN GW
121
HSS
141
HSS
Handover Preparation (301)
Relocation Command (311)
Relocation Command (313)
Handover Notify (317)
Handover Complete (315)
Modify Bearer Request (319)
TAU Request (321)
Securuty Mode Command (eKSI...) NAS-MAC (341)
Generate Knasen, KNAS int based on Kasme indexed by eKSI (343)
MAC Verification (345)
TAU accept (PLMN ID) (351)

FIG.3

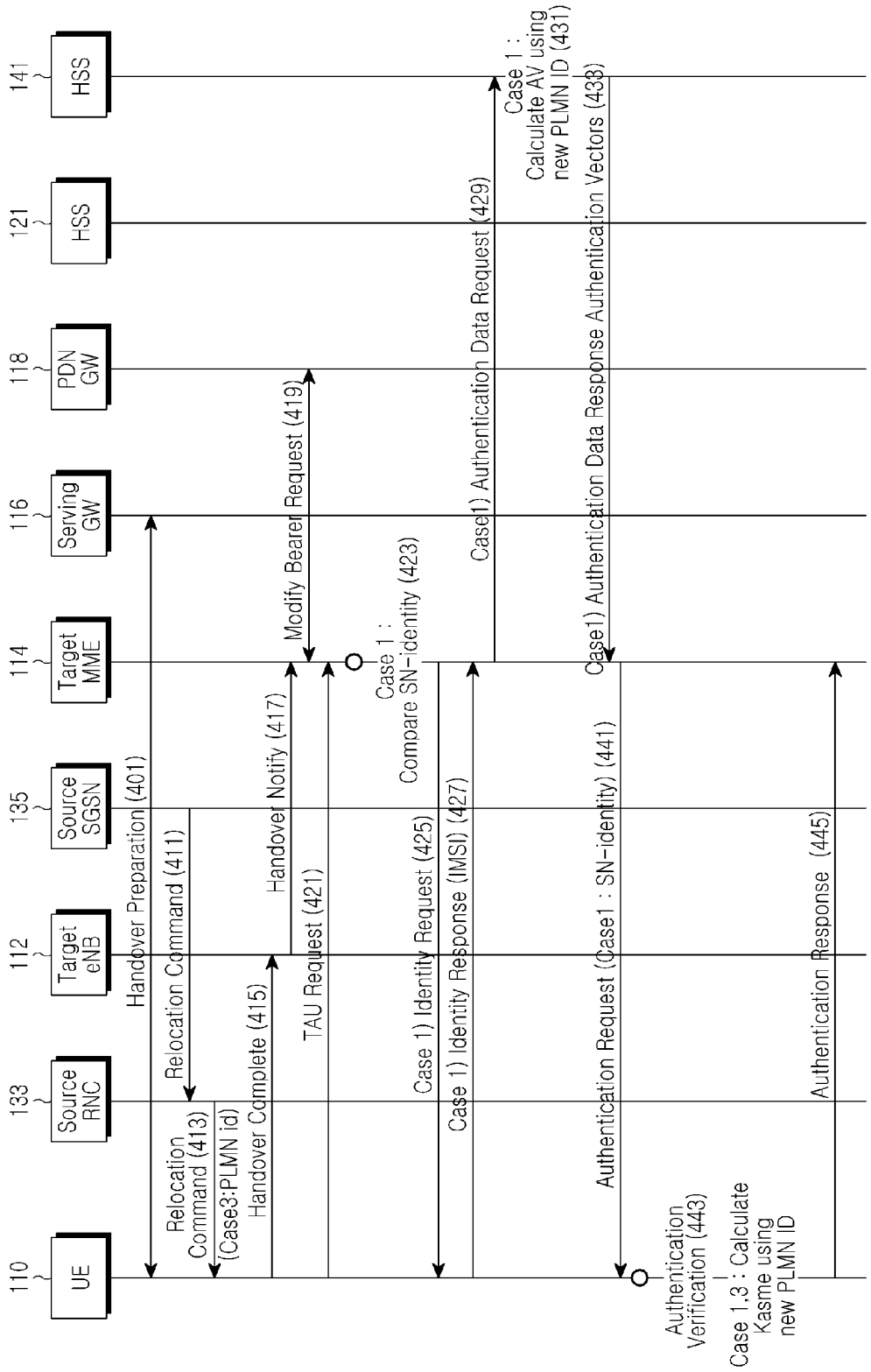
110 UE
133 Source RNC
112 Target eNB
135 Source SGSN
114 Target MME
116 Serving GW
118 PDN GW
121 HSS
141 HSS
Handover Preparation (401)
Relocation Command (411)
Relocation Command (413)
(Case3:PLMN id)
Handover Complete (415)
Handover Notify (417)
TAU Request (421)
Modify Bearer Request (419)
Case 1 : Compare SN-identity (423)
Case 1) Identity Request (425)
Case 1) Identity Response (IMSI) (427)
Case1) Authentication Data Request (429)
Case 1 : Calculate AV using new PLMN ID (431)
Case1) Authentication Data Response Authentication Vectors (433)
Authentication Request (Case1 : SN-identity) (441)
Authentication Verification (443)
Case 1,3 : Calculate Kasme using new PLMN ID
Authentication Response (445)

FIG. 4

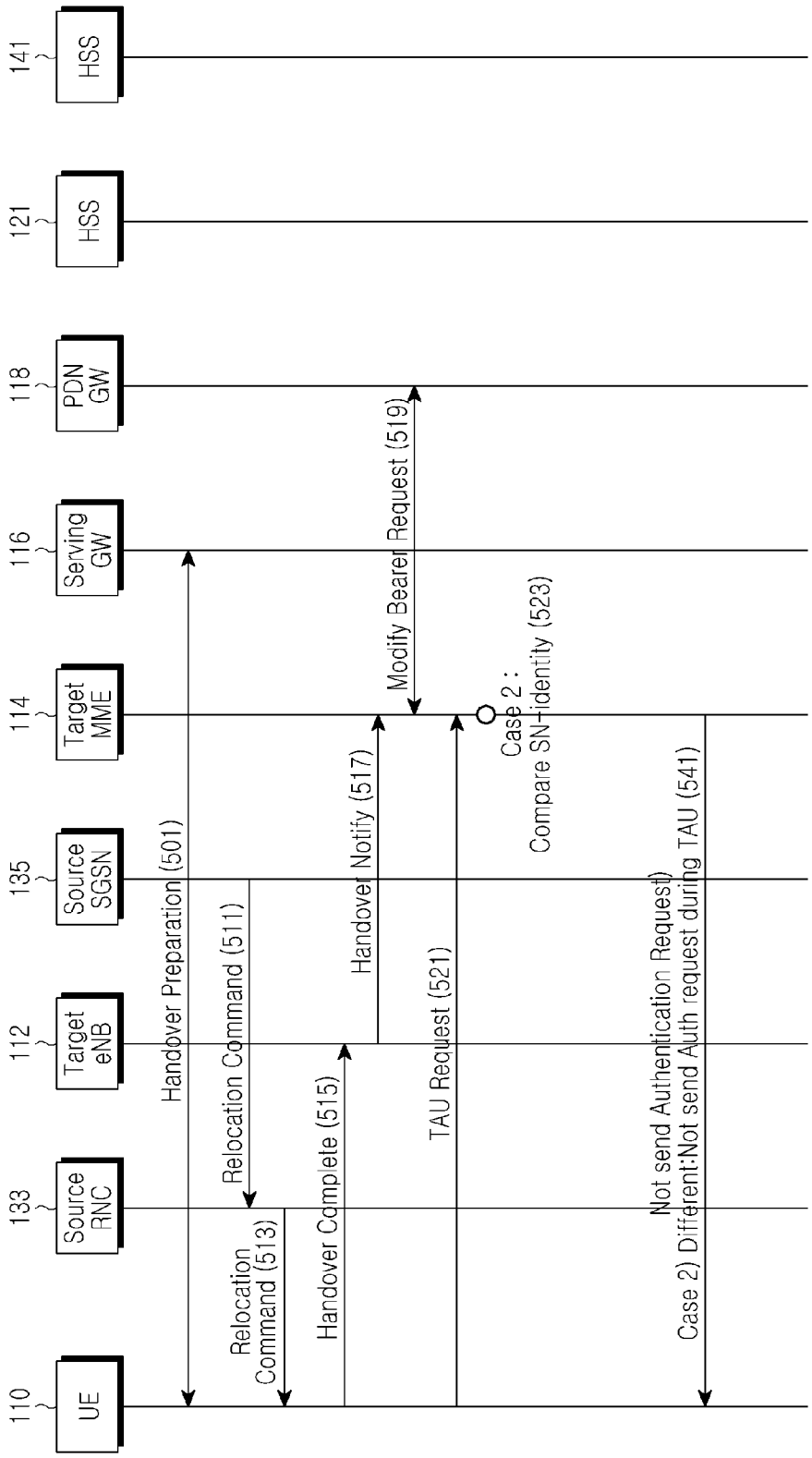
110
UE
133
Source RNC
112
Target eNB
135
Source SGSN
114
Target MME
116
Serving GW
118
PDN GW
121
HSS
141
HSS
Handover Preparation (501)
Relocation Command (511)
Relocation Command (513)
Handover Complete (515)
Handover Notify (517)
Modify Bearer Request (519)
TAU Request (521)
Case 2 :
Compare SN-identity (523)
Not send Authentication Request)
Case 2) Different:Not send Auth request during TAU (541)

FIG.5

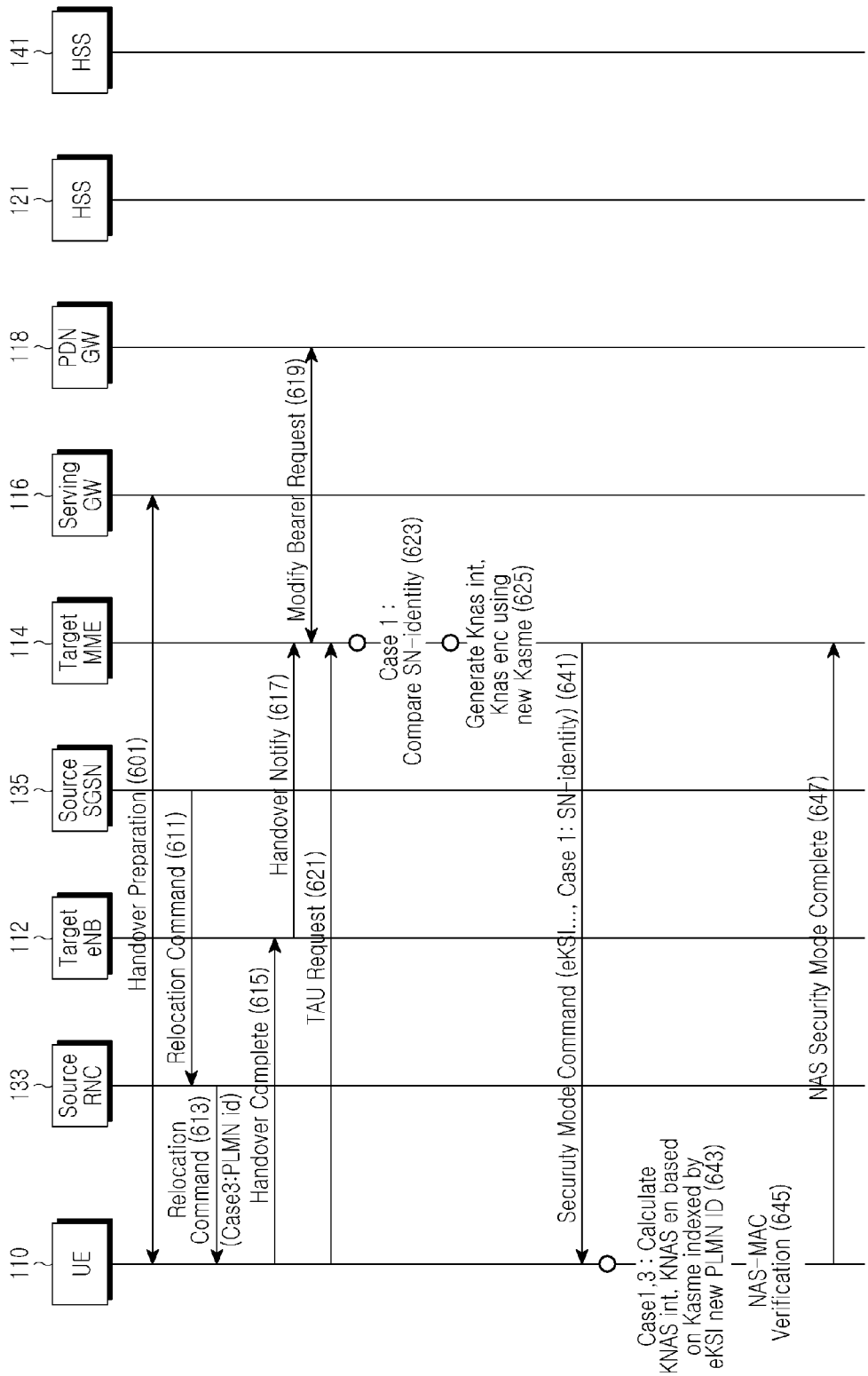
110
UE
133
Source RNC
112
Target eNB
135
Source SGSN
114
Target MME
116
Serving GW
118
PDN GW
121
HSS
141
HSS
Handover Preparation (601)
Relocation Command (611)
Relocation Command (613)
(Case3:PLMN id)
Handover Complete (615)
Handover Notify (617)
Modify Bearer Request (619)
TAU Request (621)
Case 1 : Compare SN-identity (623)
Generate Knas int, Knas enc using new Kasme (625)
Securuty Mode Command (eKSI..., Case 1: SN-identity) (641)
Case1,3 : Calculate KNAS int, KNAS en based on Kasme indexed by eKSI new PLMN ID (643)
NAS-MAC Verification (645)
NAS Security Mode Complete (647)

FIG.6

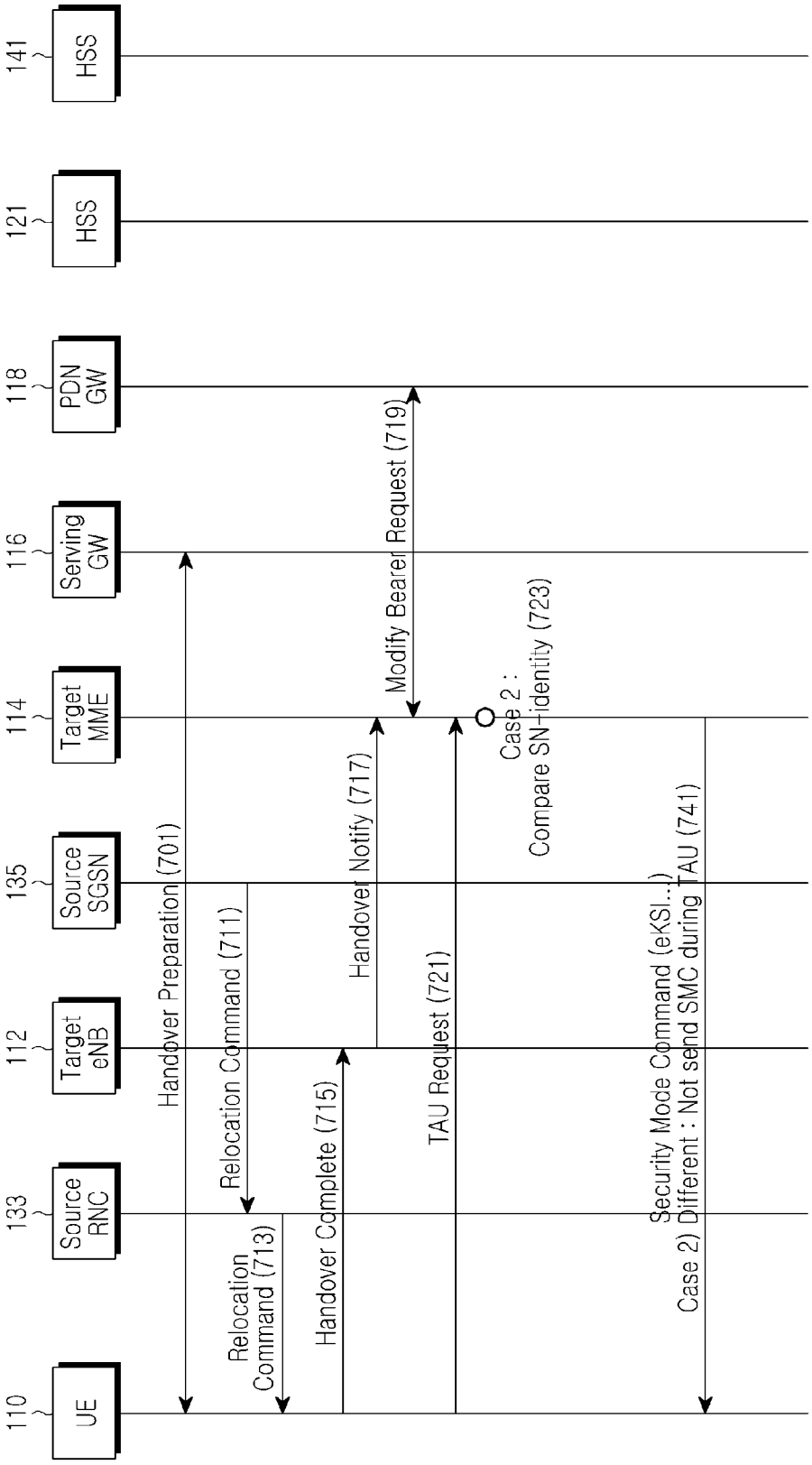
110
UE
133
Source RNC
112
Target eNB
135
Source SGSN
114
Target MME
116
Serving GW
118
PDN GW
121
HSS
141
HSS
Handover Preparation (701)
Relocation Command (711)
Relocation Command (713)
Handover Complete (715)
Handover Notify (717)
Modify Bearer Request (719)
TAU Request (721)
Case 2 :
Compare SN-identity (723)
Security Mode Command (eKSI...)
Case 2) Different : Not send SMC during TAU (741)

FIG. 7

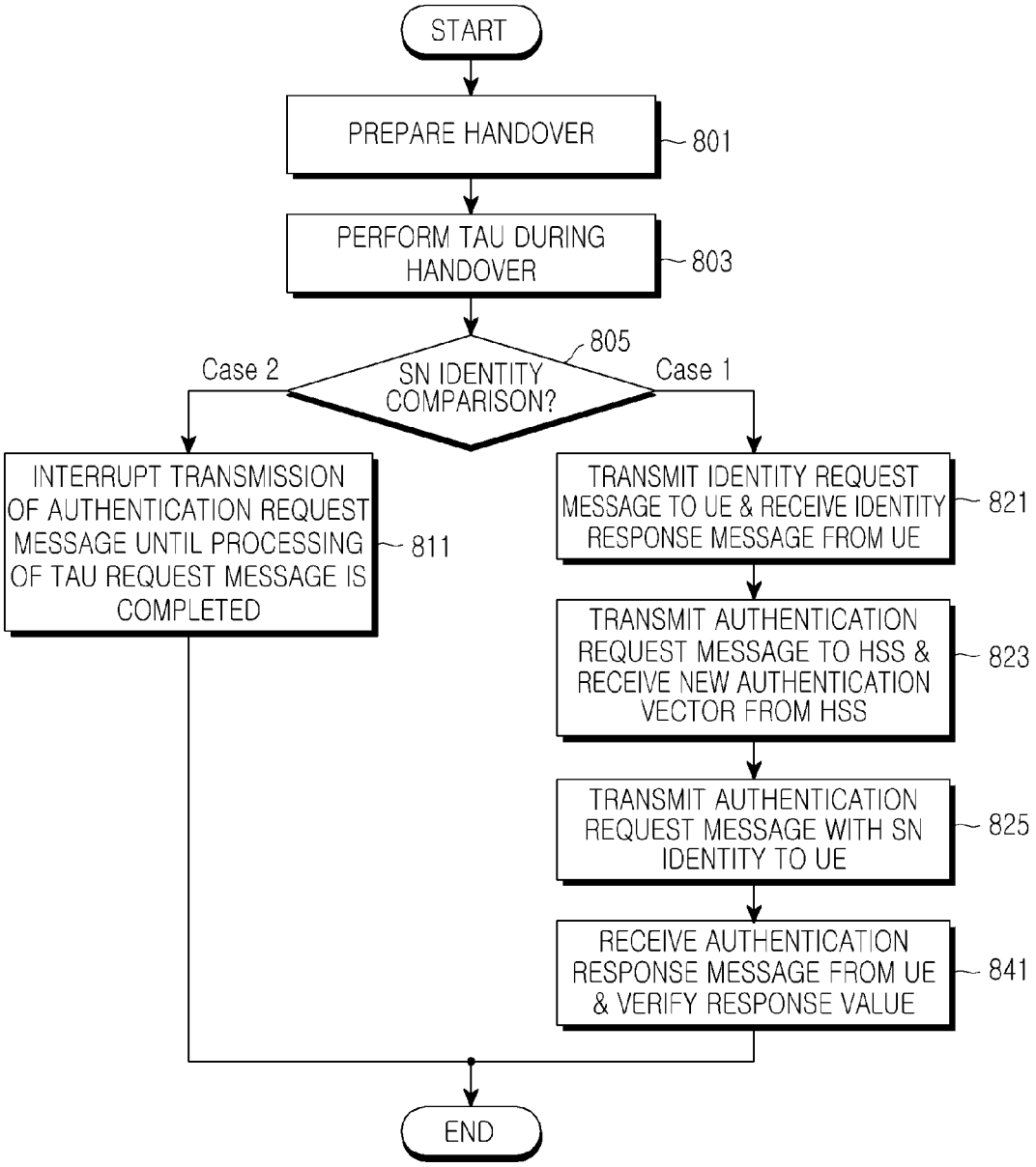
START
PREPARE HANDOVER
801
PERFORM TAU DURING HANDOVER
803
805
SN IDENTITY COMPARISON?
Case 2
Case 1
INTERRUPT TRANSMISSION OF AUTHENTICATION REQUEST MESSAGE UNTIL PROCESSING OF TAU REQUEST MESSAGE IS COMPLETED
811
TRANSMIT IDENTITY REQUEST MESSAGE TO UE & RECEIVE IDENTITY RESPONSE MESSAGE FROM UE
821
TRANSMIT AUTHENTICATION REQUEST MESSAGE TO HSS & RECEIVE NEW AUTHENTICATION VECTOR FROM HSS
823
TRANSMIT AUTHENTICATION REQUEST MESSAGE WITH SN IDENTITY TO UE
825
RECEIVE AUTHENTICATION RESPONSE MESSAGE FROM UE & VERIFY RESPONSE VALUE
841
END

FIG.8

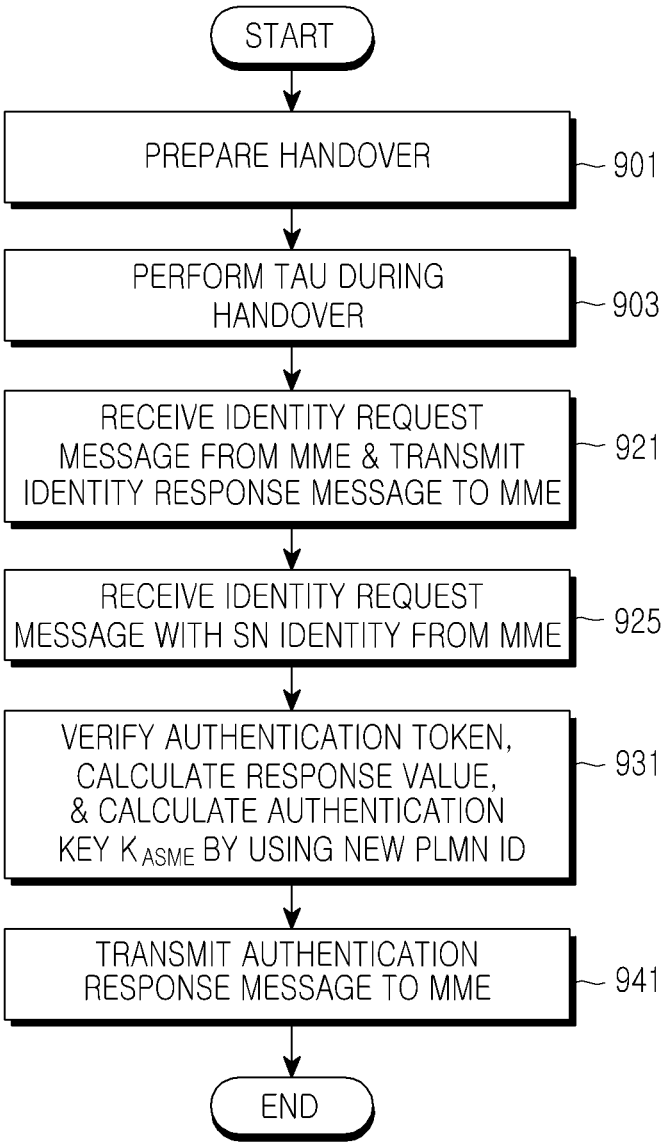
START
PREPARE HANDOVER
901
PERFORM TAU DURING HANDOVER
903
RECEIVE IDENTITY REQUEST MESSAGE FROM MME & TRANSMIT IDENTITY RESPONSE MESSAGE TO MME
921
RECEIVE IDENTITY REQUEST MESSAGE WITH SN IDENTITY FROM MME
925
VERIFY AUTHENTICATION TOKEN, CALCULATE RESPONSE VALUE, & CALCULATE AUTHENTICATION KEY K_{ASME} BY USING NEW PLMN ID
931
TRANSMIT AUTHENTICATION RESPONSE MESSAGE TO MME
941
END

FIG.9

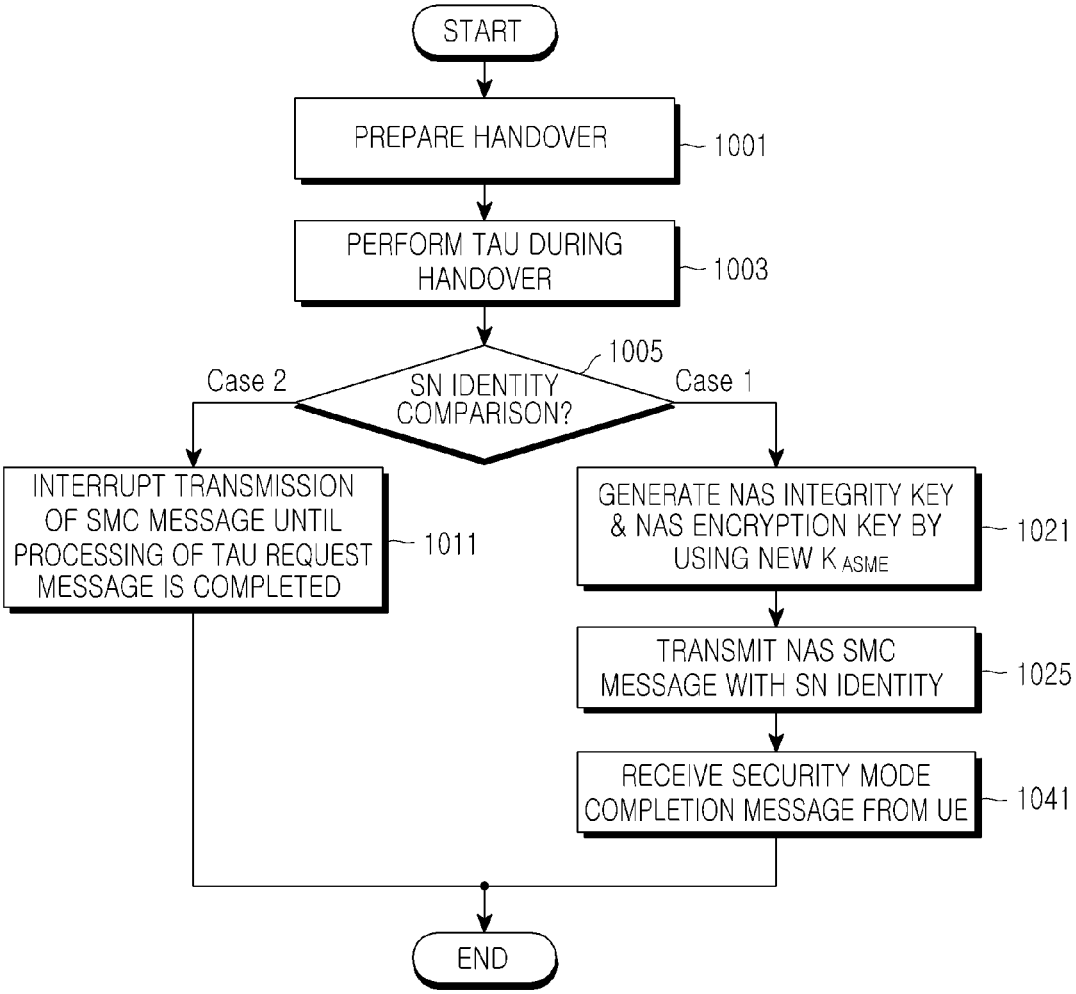
START
PREPARE HANDOVER
1001
PERFORM TAU DURING HANDOVER
1003
1005
SN IDENTITY COMPARISON?
Case 2
Case 1
INTERRUPT TRANSMISSION OF SMC MESSAGE UNTIL PROCESSING OF TAU REQUEST MESSAGE IS COMPLETED
1011
GENERATE NAS INTEGRITY KEY & NAS ENCRYPTION KEY BY USING NEW K ASME
1021
TRANSMIT NAS SMC MESSAGE WITH SN IDENTITY
1025
RECEIVE SECURITY MODE COMPLETION MESSAGE FROM UE
1041
END

FIG.10

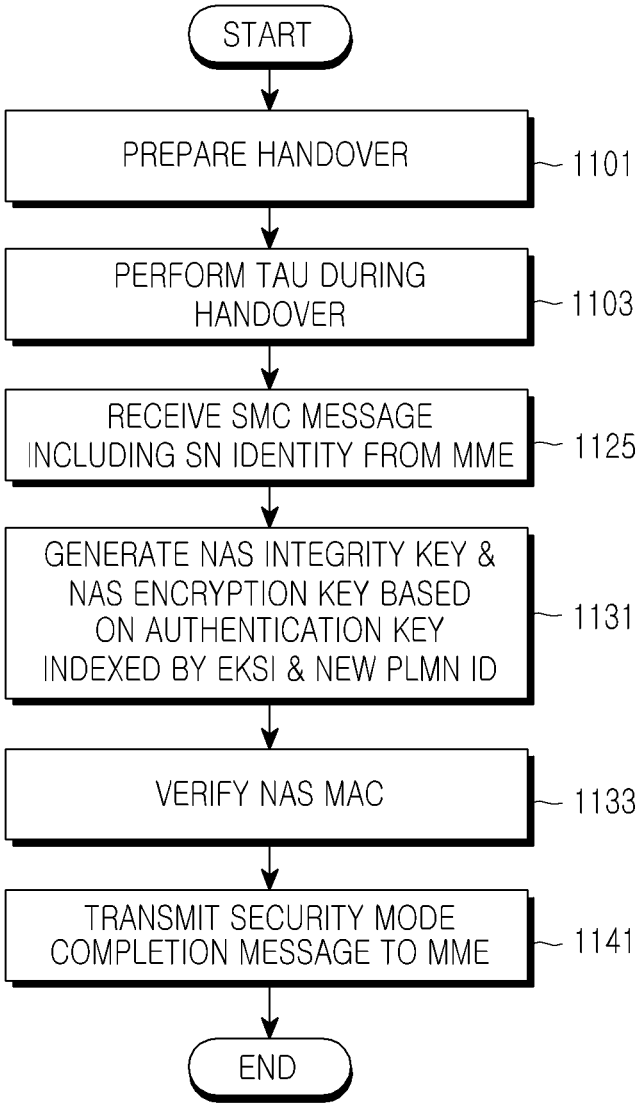
START
PREPARE HANDOVER
1101
PERFORM TAU DURING HANDOVER
1103
RECEIVE SMC MESSAGE INCLUDING SN IDENTITY FROM MME
1125
GENERATE NAS INTEGRITY KEY & NAS ENCRYPTION KEY BASED ON AUTHENTICATION KEY INDEXED BY EKSI & NEW PLMN ID
1131
VERIFY NAS MAC
1133
TRANSMIT SECURITY MODE COMPLETION MESSAGE TO MME
1141
END

FIG.11

METHOD AND SYSTEM FOR MANAGING SECURITY IN MOBILE COMMUNICATION SYSTEM

CROSS-REFERENCE TO RELATED APPLICATION(S)

This application is a continuation application of prior application Ser. No. 14/532,421, filed on Nov. 4, 2014, which will issue as U.S. Pat. No. 9,131,380 on Sep. 8, 2015 and claimed the benefit under 35 U.S.C §119(a) of a U.S. patent application filed on Apr. 27, 2012 in the U.S. Patent and Trademark Office and assigned Ser. No. 13/504,786, which issued as U.S. Pat. No. 8,881,237 on Nov. 4, 2014, and which was the U.S. National Stage application under 35 U.S.C. §371 of an International Application filed on Oct. 27, 2010 and assigned application number PCT/KR2010/007430, which claimed the benefit under 35 U.S.C. §365(b) of a Korean patent application filed in the Korean Industrial Property Office on Oct. 27, 2009 and assigned Serial number 10-2009-0102501, the entire disclosure of each of which is hereby incorporated by reference.

BACKGROUND OF THE INVENTION

1. Field of the Invention

The present invention relates to a mobile communication system. More particularly, the present invention relates to a method and a system for managing a security and an authentication of a User Equipment (UE) and a network in an environment in which the UE performs a handover.

2. Description of the Related Art

The 3rd Generation Partnership Project (3GPP), which is a representative organization for establishing standards for a mobile communication system, has defined an Evolved Packet System (EPS) for the next generation communication and has employed the Mobility Management Entity (MME) as a mobility management entity of a network. For the mobile communication system as described above, a solution improved from the Non-Access Stratum (NAS) protocol, which has been used in the conventional mobile communication systems, such as a 3GPP communication system, has been presented in order to provide a high speed communication service in the next generation mobile communication. In the improved solution, a security management scheme has been enhanced by employing, in performing a security mode, the concept of a NAS protocol, which provides a security to a NAS, in addition to a security process performed in a wireless access stratum and a conventional authentication process.

However, according to the current NAS protocol definition and the current NAS protocol security definition, the security may not be ensured or the communication may be interrupted in supporting a handover between Public Land Mobile Networks (PLMNs). Therefore, a need exists for a method capable of supporting the communication, the security, and the authentication between a UE and a network in an efficient and incessant manner even though the PLMN changes, through an improvement of a NAS security mode command process introduced in order to enhance the NAS protocol and the authentication process.

The above information is presented as background information only to assist with an understanding of the present disclosure. No determination has been made, and no assertion is made, as to whether any of the above might be applicable as prior art with regard to the present invention.

SUMMARY OF THE INVENTION

Aspects of the present invention are to address at least the above-mentioned problems and/or disadvantages and to provide at least the advantages described below. Accordingly, an aspect of the present invention is to provide a system and a method for security management using a Non-Access Stratum (NAS) protocol during a handover of a UE by a mobility management entity in a mobile communication system.

Another aspect of the present invention is to provide a system and a method for security management in a mobile communication system, which enables smooth operations of authentication and security modes even during a handover of a User Equipment (UE) between Public Land Mobile Networks (PLMNs) by using a NAS protocol, thereby achieving an efficient mobility management of the UE.

In accordance with an aspect of the present invention, a method of managing a security during a handover of a User Equipment (UE) by a Mobility Management Entity (MME) of a mobile communication system is provided. The method includes comparing a network identity included in a Tracking Area Update (TAU) request message received from the UE with a network identity of the MME, and determining whether to transmit an authentication request message, based on a result of the comparison between the network identities.

In accordance with another aspect of the present invention, a method of managing a security during a handover of a UE in a mobile communication system is provided. The method includes transmitting a TAU request message to an MME, and receiving an authentication request message from the MME according to a result of comparison between a network identity included in the TAU request message and a network identity of the MME.

In accordance with another aspect of the present invention, a method of managing a security during a handover of a UE by an MME of a mobile communication system is provided. The method includes receiving a TAU request message from the UE, comparing a network identity included in the TAU request message with a network identity of the MME, and determining whether to transmit a Security Mode Command (SMC) message to the UE as a result of the comparison.

In accordance with another aspect of the present invention, a method of managing a security during a handover of a UE in a mobile communication system is provided. The method includes transmitting a TAU request message to an MME, and receiving an SMC message from the MME according to a result of comparison between a network identity included in the TAU request message and a network identity of the MME.

In accordance with another aspect of the present invention, an apparatus for managing a security during a handover of a UE by an MME of a mobile communication system is provided. The apparatus includes a control unit for comparing a network identity included in a TAU request message received from the UE with a network identity of the MME, and for determining whether to transmit an authentication request message, based on a result of the comparison between the network identities.

In accordance with another aspect of the present invention, an apparatus for managing a security during a handover of a UE in a mobile communication system is provided. The apparatus includes a control unit for transmitting a TAU request message to an MME, and for receiving an authentication request message from the MME according to a result of comparison between a network identity included in the TAU request message and a network identity of the MME.

In accordance with another aspect of the present invention, an apparatus for managing a security during a handover of a UE in a mobile communication system is provided. The apparatus includes a control unit for transmitting a TAU request message to an MME, and for receiving an SMC message from the MME according to a result of comparison between a

network identity included in the TAU request message and a network identity of the MME.

Other aspects, advantages, and salient features of the invention will become apparent to those skilled in the art from the following detailed description, which, taken in conjunction with the annexed drawings, discloses exemplary embodiments of the invention.

BRIEF DESCRIPTION OF THE DRAWINGS

The above and other aspects, features, and advantages of certain exemplary embodiments of the present invention will be more apparent from the following description taken in conjunction with the accompanying drawings, in which:

FIG. **1** is a block diagram illustrating a Public Land Mobile Network (PLMN) handover and security environment in a mobile communication system according to an exemplary embodiment of the present invention;

FIG. **2** is a message flow diagram illustrating a process of authentication during a handover between PLMNs according to an exemplary embodiment of the present invention;

FIG. **3** is a message flow diagram illustrating a Security Mode Command (SMC) process during a handover between PLMNs according to an exemplary embodiment of the present invention;

FIG. **4** is a message flow diagram illustrating an authentication process during a handover between PLMNs according to an exemplary embodiment of the present invention;

FIG. **5** is a message flow diagram illustrating an authentication process during a handover between PLMNs according to another exemplary embodiment of the present invention;

FIG. **6** is a message flow diagram illustrating a Security Mode Command (SMC) process during a handover between PLMNs according to an exemplary embodiment of the present invention;

FIG. **7** is a message flow diagram illustrating an SMC process during a handover between PLMNs according to another exemplary embodiment of the present invention;

FIG. **8** is a flowchart illustrating an operation of a Mobile Management Entity (MME) for supporting an authentication process during a handover between PLMNs according to an exemplary embodiment of the present invention;

FIG. **9** is a flowchart illustrating an operation of a UE for supporting an authentication process during a handover between PLMNs according to an exemplary embodiment of the present invention;

FIG. **10** is a flowchart illustrating an operation of an MME for supporting an SMC process during a handover between PLMNs according to an exemplary embodiment of the present invention; and

FIG. **11** is a flowchart illustrating an operation of a User Equipment (UE) for supporting an SMC process during a handover between PLMNs according to an exemplary embodiment of the present invention.

Throughout the drawings, it should be noted that like reference numbers are used to depict the same or similar elements, features, and structures.

DETAILED DESCRIPTION OF EXEMPLARY EMBODIMENTS

The following description with reference to the accompanying drawings is provided to assist in a comprehensive understanding of exemplary embodiments of the invention as defined by the claims and their equivalents. It includes various specific details to assist in that understanding but these are to be regarded as merely exemplary. Accordingly, those of ordinary skill in the art will recognize that various changes and modifications of the embodiments described herein can be made without departing from the scope and spirit of the invention. In addition, descriptions of well-known functions and constructions may be omitted for clarity and conciseness.

The terms and words used in the following description and claims are not limited to the bibliographical meanings, but, are merely used by the inventor to enable a clear and consistent understanding of the invention. Accordingly, it should be apparent to those skilled in the art that the following description of exemplary embodiments of the present invention is provided for illustration purpose only and not for the purpose of limiting the invention as defined by the appended claims and their equivalents.

It is to be understood that the singular forms "a," "an," and "the" include plural referents unless the context clearly dictates otherwise. Thus, for example, reference to "a component surface" includes reference to one or more of such surfaces.

A main idea of the exemplary embodiments of the present invention is to provide an incessant mobile communication for a mobile communication system during a handover of a User Equipment (UE) between Public Land Mobile Networks (PLMNs) by using a Non-Access Stratum (NAS) protocol which is a protocol between a UE and a Mobility Management Entity (MME). Further, exemplary embodiments of the present invention provide a method of supporting an authentication and the security and management of a NAS protocol, which is a protocol between a UE and an MME for authentication. The following detailed description of exemplary embodiments of the present invention discusses a 3GPP-based Evolved Packet System (EPS) system, Universal Terrestrial Radio Access Network (UTRAN), and GSM EDGE Radio Access Network(GERAN), although exemplary embodiments of the present invention can be used by another mobile communication system using a NAS protocol.

Meanwhile, as shown in FIG. **1**, the exemplary embodiment of the present invention shown in FIG. **1** proposes a method of supporting an authentication and a security for communication between a UE and an MME by using a NAS protocol when a UE moves from an Evolved UTRAN (EUTRAN) or another Radio Access Technology (RAT) to another EUTRAN, and this method can be applied to other mobile communication systems, which have similar technical backgrounds, channel types, network architectures, or protocols, or perform similar operations with different protocols, with small modifications without departing from the scope of the present invention, as apparent to those skilled in the art.

FIG. **1** is a block diagram illustrating a PLMN handover and security environment in a mobile communication system according to an exemplary embodiment of the present invention. As an example, a 3GPP EPS system structure has been described in FIG. **1**. The following description of exemplary embodiments of the present invention mainly discusses potential problems associated with when a UE moves from a EUTRAN or another RAT to another EUTRAN. According to exemplary embodiments of the present invention, the method can be used by another similar mobile communication system.

Referring to FIG. **1**, an Evolved Node Base Station (E Node B; eNB)/Radio Network Controller (RNC) **133** establishes a radio access and performs a communication with a UE **110** located within a service area of itself. The UE **110** refers to a terminal or UE accessing a packet data network, such as the Internet, through a Serving Gateway (SGW) **116**. As described herein, a Packet Data Network Gateway (PDN

GW) **118** as an important network entity of a packet data network that serves as a Home Agent (HA).

Meanwhile, a Mobility Management Entity (MME)/Serving GPRS Support Node (SGSN) **135** performs a mobility management, a location management, and a registration of a UE. Further, a Home Subscriber Server (HSS) **121** for managing authentication information and service information for a user and a UE is connected to the MME/SGSN **135** through an interface.

A data path exists between the eNB/RNC **133** and the Serving GW **116**, and a control path or an interface for managing the mobility of a UE exists between the MME/SGSN **135** and the Serving GW **116**. According to exemplary embodiments of the present invention, the UE **110** and the MME/SGSN **135** communicate with each other using a NAS protocol stack, thereby performing the mobility management and session management.

Exemplary embodiments of the present invention address a situation in which a UE **110** connected to a source network performs a handover. It is assumed that the source network may be one RAT among various types of RATs, such as a EUTRAN, UTRAN, and GERAN, and the PLMN of the source network is different from the PLMN to which the UE **110** will move. That is, exemplary embodiments of the present invention attempt to resolve problems associated with a handover situation of a UE **110** in which the PLMN changes from PLMN A to PLMN B during the handoff of the UE **110** from a source network to a target network and the target network supports the EUTRAN. Therefore, when the UE **110** performs a handover from a source network to a target network, the UE **110** is connected to the target eNB **112**, the target MME **114**, and the target HSS **141**, and receives a service from them. FIGS. **2** to **11** will be described with reference to the above-mentioned network according to exemplary embodiments of the present invention for an efficient operation and the UE **110** and the MME **114** based on a NAS protocol.

FIG. **2** is a message flow diagram illustrating a process of authentication during a handover between PLMNs according to an exemplary embodiment of the present invention.

Step **201** corresponds to a handover preparation step. That is, step **201** corresponds to a step of requesting a core network to provide resources, which includes a step of making requests for resource preparation by the target eNB **112**, the target MME **114**, and the serving GW **116**. In this step, a bearer context or mobility management context is transmitted from a source system to a target system for the requesting.

The handover preparation step includes the following substeps. When the source eNB/RNC **133** transmits a "relocation required" message to the source MME/SGSN **135** in step **201-1**, the source MME/SGSN **135** forwards a relocation request message to the target MME **114** in step **201-3**. Then, in step **201-5**, the target MME **114** forwards a relocation response message to the source MME/SGSN **135**.

In step **211**, the source MME/SGSN **135** sends a relocation command message to the source eNB/RNC **133**, thereby notifying the source eNB/RNC **133** that the handover preparation step has been completed. Then, the source eNB/RNC **133** transmits a handover command message to the UE **110** in step **213**, and the UE **110** issues a handover command to the target eNB **112** in step **215**. When the UE **110** has performed a handover to the target eNB **112**, the target eNB **112** transmits a handover notification message to the target MME **114** in step **217**. Thereafter, in step **219**, if there is a change in the serving GW **116**, a bearer modification request is made by the target MME **114**, the serving GW **116**, or the PDN GW **118**. In step **221**, during the handover process, the UE **110** transmits a Tracking Area Update (TAU) request message to the target MME **114**. Thereafter, the target MME **114** inserts a PLMN Identity (ID) in a TAU response message, which is not shown in the drawings, and then sends the TAU response message to the UE **110**. Then, the UE **110** can obtain a network ID of the serving network, which provides a service to the UE **110**. The network ID includes a serving network ID and the PLMN ID. Therefore, even though the authentication thereafter is started in the target MME **114**, no problem occurs in the authentication because the UE **110** and the target MME **114** share the PLMN ID (e.g., the ID of the PLMN B).

Referring to FIG. **2**, when the target MME **114** transmits an authentication request message to the UE **110** as in step **241** while the target MME **114** processes the TAU request message received in step **221**, the UE **110** verifies an authentication vector in step **243**. At this time, because the UE **110** has not received a response (e.g., TAU response message) in response to the TAU request message, the UE **110** uses the PLMN ID (e.g., PLMN A), which is the currently known ID of the serving network, in calculation for verifying the authentication vector, which results in a failure in the verification of the entire authentication vector. As a result, the Radio Resource Control (RRC) connection between the UE **110** and the source eNB/RNC **133** is interrupted in step **245**, which causes a problem.

FIG. **3** is a message flow diagram illustrating a Security Mode Command (SMC) process during a handover between PLMNs according to an exemplary embodiment of the present invention.

Referring to FIG. **3**, the exemplary embodiment of the present invention is described in relation to an example which is hereinafter referred to as SMC case **1**.

Step **301** corresponds to a handover preparation step. Step **301** is identical to the handover preparation step **201**, so a detailed description thereof will be omitted here.

In step **311**, the source MME/SGSN **135** sends a relocation command message to the source eNB/RNC **133**, thereby notifying the source eNB/RNC **133** that the handover preparation step has been completed. Then, the source eNB/RNC **133** transmits a handover command message to the UE **110** in step **313**, and the UE **110** issues a handover command to the target eNB **112**. When the UE **110** completes the handover process to the target eNB **112** in step **315**, the target eNB **112** transmits a handover notification message to the target MME **114** in step **317**. Thereafter, in step **319**, if there is a change in the serving GW **116**, etc., a bearer modification request is made by the target MME **114**, the serving GW **116**, or the PDN GW **118**. In step **321**, during the handover process, the UE **110** transmits a Tracking Area Update (TAU) request message to the target MME **114**. Thereafter, the target MME **114** inserts a PLMN Identity (ID) in a TAU response message, which is not shown in the drawings, and then sends the TAU response message to the UE **110**. Then, the UE **110** can obtain a network ID of the serving network, which provides a service to the UE **110**. Therefore, even though the security mode command process thereafter is started in the target MME **114**, no problem occurs in executing the security mode command since the UE **110** and the target MME **114** share the PLMN ID (e.g., the ID of the PLMN B).

However, referring to FIG. **3**, the target MME **114** transmits a security mode command message to the UE **110** as in step **341** while it processes the TAU request message received in step **321**. Then, in step **343**, the UE **110** searches for an authentication key through an NAS Key Set Identity (eKSI). At this time, because the UE **110** has not received a response (e.g., a TAU response message) in response to the TAU request message, the serving network ID currently known to

the UE **110** is the PLMN ID (PLMN A). However, due to the same eKSI in spite of different authentication values KASME, a NAS encryption key, and a NAS integrity key are generated based on the different authentication keys. Thereafter, when the UE **110** verifies the NAS Message Authentication Code (MAC) value in step **345**, the UE **110** fails in deciphering the MAC because the integrity keys are different. As a result, a Radio Resource Control (RRC) protocol connection between the UE **110** and the source eNB/RNC **133** may be interrupted, which causes a problem. In step **351**, the target MME **114** transmits a TAU accept message to the UE **110**. In the following description of exemplary embodiments of the present invention (as shown in FIGS. **4** to **11**), the operations of the UE are performed by a control unit (not shown) within the UE, and the operations of the MME are performed by a control unit (not shown) within the MME.

FIG. **4** is a message flow diagram illustrating an authentication process during a handover between PLMNs according to an exemplary embodiment of the present invention.

Referring to FIG. **4**, the exemplary embodiment of the present invention is described in relation to the example identified as SMC case **1**.

Step **401** corresponds to a handover preparation step. Step **401** is identical to the handover preparation step **201**, so a detailed description thereof will be omitted here.

In step **411**, the source MME/SGSN **135** sends a relocation command message to the source eNB/RNC **133**, thereby notifying the source eNB/RNC **133** that the handover preparation step has been completed. Then, the source eNB/RNC **133** transmits a handover command message to the UE **110** in step **413**, and the UE **110** issues a handover command to the target eNB **112**. When the UE **110** completes the handover process to the target eNB **112** in step **415**, the target eNB **112** transmits a handover notification message to the target MME **114** in step **417**. Thereafter, in step **419**, if there is a change in the serving GW **116**, etc., a bearer modification request is made by the target MME **114**, the serving GW **116**, the PDN GW **118**, etc. In step **421**, during the handover process, the UE **110** transmits a Tracking Area Update (TAU) request message to the target MME **114**. Thereafter, in step **423**, the MME **114** compares the PLMN ID of the MME **114** itself and the PLMN ID included in the information transmitted from the UE **110**. When the two IDs are different, the MME **114** sends an identity request message to the UE **110** in step **425**. In step **427**, the UE **110** transmits an identity response message including an International Mobile Station Identity (IMSI) of itself to the target MME **114**. In step **429**, the target MME **114** transmits an authentication data request message to the HSS **141**. In step **431**, the HSS **141** calculates an authentication vector based on a new PLMN identity. Then, the HSS **141** transmits a random number (RAND), an authentication key (KASME), and an authentication token (AUTN) to the target MME **114** through an authentication data response step as step **433**. Thereafter, the target MME **114** transmits an authentication request message including a serving network identity (i.e. PLMN identity) to the UE **110** in step **441**. The authentication request message further includes an AUTN and a random challenge (RAND), which are a part of the authentication vector, in addition to the PLMN identity. In step **443**, the UE **110** verifies the authentication vector and calculates the authentication key (K_{ASME}) by using the new PLMN identity transmitted from the MME **114**. Thereafter, in step **445**, the UE **110** transmits an authentication response message to the target MME **114** in step **445**. At this time, the authentication response message sent from the UE **110** to the target MME **114** includes an RES, which is a response parameter calculated by the UE **110**. The RES may include the calculated authentication key (K_{ASME}).

In the meantime, the target MME **114** verifies if a received authentication response message is an authentication response message transmitted from the UE, to which the target MME itself has sent the authentication request, by comparing the RES included in the received authentication response message with an expected response (XRES).

Although FIG. **4** is based on an assumption that there is no transfer of a PLMN identity by the eNB/RNC **133** through a handover command in step **413**, a PLMN identity may be transferred through a handover command by the eNB/RNC **133** in step **413** in the case of another embodiment (authentication case **3**). Then, even when the TAU request message has been transmitted from the UE **110** to the target MME **114** as in step **421**, the UE **110** and the MME **114** can have the same PLMN ID even without performing steps **423** to **441**. Therefore, the authentication process, security process, and communication thereafter can be incessantly performed even though the target MME **114** transmits an authentication request message in step **441**.

FIG. **5** is a message flow diagram illustrating an authentication process during a handover between PLMNs according to another exemplary embodiment of the present invention.

Referring to FIG. **5**, the exemplary embodiment of the present invention is described in relation to an example which is hereafter referred to as SMC case **2**.

Step **501** corresponds to a handover preparation step. Step **501** is identical to the handover preparation step **201**, so a detailed description thereof will be omitted here.

In step **511**, the source MME/SGSN **135** sends a relocation command message to the source eNB/RNC **133**, thereby notifying the source eNB/RNC **133** that the handover preparation step has been completed. Then, the source eNB/RNC **133** transmits a handover command message to the UE **110** in step **513**, and the UE **110** issues a handover command to the target eNB **112**. When the UE **110** completes the handover process to the target eNB **112** in step **515**, the target eNB **112** transmits a handover notification message to the target MME **114** in step **517**. Thereafter, in step **519**, if there is a change in the serving GW **116**, etc., a bearer modification request is made by the target MME **114**, the serving GW **116**, the PDN GW **118**, etc. In step **521**, during the handover process, the UE **110** transmits a Tracking Area Update (TAU) request message to the target MME **114**. Thereafter, in step **523**, the target MME **114** compares the PLMN ID of the MME **114** itself with the PLMN ID included in the information transmitted from the UE **110**. Then, in step **541**, when the two IDs are different, which implies that the serving network identities (PLMN identities) are different, the MME **114** does not send an authentication request message to the UE **110** until the processing of the TAU request message in step **521** is completed.

FIG. **6** is a message flow diagram illustrating a Security Mode Command (SMC) process during a handover between PLMNs according to an exemplary embodiment of the present invention.

Referring to FIG. **6**, the exemplary embodiment of the present invention is described in relation to the example identified as SMC case **1**.

Step **601** corresponds to a handover preparation step. Step **601** is identical to the handover preparation step **201**, so a detailed description thereof will be omitted here.

In step **611**, the source MME/SGSN **135** sends a relocation command message to the source eNB/RNC **133**, thereby notifying the source eNB/RNC **133** that the handover preparation step has been completed. Then, the source eNB/RNC

133 transmits a handover command message to the UE 110 in step 613, and the UE 110 issues a handover command to the target eNB 112. When the UE 110 completes the handover process to the target eNB 112 in step 615, the target eNB 112 transmits a handover notification message to the target MME 116 in step 617. Thereafter, in step 619, if there is a change in the serving GW 116, etc., a bearer modification request is made by the target MME 116, the serving GW 116, the PDN GW 118, etc. In step 621, during the handover process, the UE 110 transmits a Tracking Area Update (TAU) request message to the target MME 116. Thereafter, in step 623, the target MME 116 compares the PLMN ID of the MME 116 itself with the PLMN ID included in the information transmitted from the UE 110. When the two IDs are different and the target MME 114 has acquired an authentication key (K_{ASME}) for a new PLMN identity, the target MME 114 generates a NAS integrity key (K_{NAS}int) and a NAS encryption key (K_{NAS}enc) in step 625. Thereafter, in step 641, the target MME 114 inserts a serving network identity (i.e., a PLMN identity) in a Security Mode Command (SMC) message and transmits the SMC message to the UE 110. In step 643, the UE 110 acquires an authentication key through a NAS Key Set Identity (eKSI). At this time, the UE 110 acquires the authentication key through an eKSI corresponding to the corresponding PLMN identity by using the newly received PLMN identity information, and generates a NAS integrity key (K_{NAS}int) and a NAS encryption key (K_{NAS}enc) from the authentication key. Thereafter, in step 645, the UE 110 verifies a NAS Message Authentication Code (MAC) by using the NAS integrity key (K_{NAS}int). When the verification is a success, the UE 110 transmits a NAS security mode completion message in step 647.

Although FIG. 6 is based on an assumption that there is no transfer of a PLMN identity by the eNB/RNC 133 through a handover command in step 613, a PLMN identity may be transferred through a handover command by the eNB/RNC 133 in step 613 in the case of another exemplary embodiment of the present invention described in relation to an example which is hereinafter referred to as SMC case 3. Then, even when the TAU request message has been transmitted from the UE 110 to the target MME 114 as in step 621, the UE 110 and the MME 114 can have the same PLMN ID even without performing steps 623 to 641. Therefore, the authentication process, security process, and communication thereafter can be incessantly performed even though the target MME 114 transmits an SMC message in step 641.

FIG. 7 is a message flow diagram illustrating an SMC process during a handover between PLMNs according to another exemplary embodiment of the present invention.

Referring to FIG. 7, the exemplary embodiment of the present invention is described in relation to the example identified as SMC case 2.

Step 701 corresponds to a handover preparation step. Step 701 is identical to the handover preparation step 201, so a detailed description thereof will be omitted here.

In step 711, the source MME/SGSN 135 sends a relocation command message to the source eNB/RNC 133, thereby notifying the source eNB/RNC 133 that the handover preparation step has been completed. Then, the source eNB/RNC 133 transmits a handover command message to the UE 110 in step 713, and the UE 110 issues a handover command to the target eNB 112. When the UE 110 completes the handover process to the target eNB 112 in step 715, the target eNB 112 transmits a handover notification message to the target MME 114 in step 717. Thereafter, in step 719, if there is a change in the serving GW 116, etc., a bearer modification request is made by the target MME 114, the serving GW 116, the PDN GW 118, etc. In step 721, during the handover process, the UE 110 transmits a Tracking Area Update (TAU) request message to the target MME 114. Thereafter, in step 723, the target MME 114 compares the PLMN ID of the MME 114 itself with the PLMN ID included in the information transmitted from the UE 110. Then, in step 741, when the two PLMN identities are different and the target MME 114 has acquired an authentication key (K_{ASME}) for a new PLMN identity through an authentication process, the target MME 114 does not send an SMC message based on the new authentication key to the UE 110 until the processing of the TAU request message is completed.

FIG. 8 is a flowchart illustrating an operation of an MME for supporting an authentication process during a handover between PLMNs according to an exemplary embodiment of the present invention.

Referring to FIG. 8, in step 801, the target MME 114 performs a handover preparation process. Step 801 is identical to the handover preparation step 201, so a detailed description thereof will be omitted here. In step 803, the target MME 114 performs a process before receiving a TAU request message among the handover process. In step 805, the target MME 114 determines the serving network identity (i.e., PLMN identity) through various comparisons, for example, by comparing the PLMN ID of the target MME 114 with a PLMN ID within an old GUTI of the TAU message transmitted from the UE 110 or by comparing the PLMN ID of the target MME 114 with a PLMN ID of a last-visited TAI within the TAU message transmitted from the UE 110. When the PLMN IDs are different, one solution is that the target MME 114 does not send an authentication request message to the UE 110 until the processing of the TAU message is completed as in step 811. Another solution (e.g., case 1) is that the target MME 114 sends an identity request message to the UE 110 and receives an identity response message from the UE 110 as in step 821. Thereafter, as in step 823, the target MME 114 transmits an authentication data request message to the HSS 141 by using UE identity information and receives a new authentication vector as a response. In step 825, the target MME 114 sends an authentication request message together with a serving network ID (i.e. PLMN ID) to the UE 110. Then, in step 841, the target MME 114 receives an authentication response message and verifies the response value.

FIG. 9 is a flowchart illustrating an operation of a UE for supporting an authentication process during a handover between PLMNs according to an exemplary embodiment of the present invention.

Referring to FIG. 9, in step 901, the UE 110 performs a handover preparation process. Step 901 is identical to the handover preparation step 201, so a detailed description thereof will be omitted here. In step 903, the UE 110 performs a process before sending a TAU request message among the handover process. In step 921, the UE 110 receives an identity request message from the target MME 114 and sends an identity response message to the target MME 114 as a response to the identity request message in step 921. In step 925, the UE 110 receives an authentication request message including a serving network ID (i.e., PLMN ID) from the target MME 114. Then, in step 931, the UE 110 verifies an authentication token, calculates a response value (RES), and calculates an authentication key (K_{ASME}) by using the serving network ID. Thereafter, in step 941, the UE 110 transmits an authentication response message to the target MME 114.

FIG. 10 is a flowchart illustrating an operation of an MME for supporting an SMC process during a handover between PLMNs according to an exemplary embodiment of the present invention.

Referring to FIG. **10**, in step **1001**, the target MME **114** performs a handover preparation process. Step **1001** is identical to the handover preparation step **201**, so a detailed description thereof will be omitted here. In step **1003**, the target MME **114** performs a process before receiving a TAU request message among the entire handover process. In step **1005**, the target MME **114** determines the serving network identity (i.e., PLMN identity) through various comparisons, for example, by comparing the PLMN ID of the target MME **114** with a PLMN ID within an old GUTI of the TAU message transmitted from the UE **110** or by comparing the PLMN ID of the target MME **114** with a PLMN ID of a last-visited TAI within the TAU message transmitted from the UE **110**. When the PLMN IDs are different, one solution is that the target MME **114** does not send an SMC message to the UE **110** until the processing of the TAU message is completed as in step **1011**. Another solution (e.g., case **1**) is that, when the MME **114** has acquired a new authentication key (K_{ASME}) through a new authentication, the target MME **114** generates a NAS encryption key and a NAS integrity key as in step **1021**. Then, in step **1025**, the target MME **114** sends a NAS SMC message together with a serving network ID (i.e., PLMN ID) to the UE **110**. Then, in step **1041**, the target MME **114** receives a security mode completion message from the UE **110**.

FIG. **11** is a flowchart illustrating an operation of a UE for supporting an SMC process during a handover between PLMNs according to an exemplary embodiment of the present invention.

Referring to FIG. **11**, in step **1101**, the UE **110** performs a handover preparation process. Step **1101** is identical to the handover preparation step **201**, so a detailed description thereof will be omitted here. In step **1103**, the UE **110** performs a process before sending a TAU request message among the entire handover process. In step **1125**, the UE **110** receives an SMC message including a serving network ID (i.e., PLMN ID) from the target MME **114**. Then, in step **1131**, the UE **110** generates a NAS encryption key and a NAS integrity key based on an authentication key indexed by an eKSI, wherein the UE **110** finds an eKSI corresponding to the newly received PLMN ID. In step **1133**, the UE **110** verifies a Message Authentication Code (MAC) by using the NAS integrity key. Thereafter, in step **1141**, the UE **110** transmits a security mode completion message to the target MME **114**.

According to exemplary embodiments of the present invention, as described above with reference to FIGS. **4** to **11**, it may be necessary to support messages shown in Tables 1 to 3 for operations of the UE and the MME, which will be described hereinafter.

Table 1 below shows types of authentication request messages according to exemplary embodiments of the present invention. Although the message types shown in Table 1 are used when the messages are transmitted from the target MME **114** to the UE **110** as in step **441** of FIG. **4**, exemplary embodiments of the present invention are not limited to the shown message types. Detailed information on the PLMN IDs of Table 1 can be referred to Table 3.

TABLE 1

IEI	Information element	Type/Reference	Presence	Format	Length
	Protocol discriminator	Protocol discriminator 9.2	M	V	½
	Security header type	Security header type 9.3.1	M	V	½
	Authentication request message type	Message type 9.8	M	V	1

TABLE 1-continued

IEI	Information element	Type/Reference	Presence	Format	Length
	NAS key set identifier$_{ASME}$	NAS key set identifier 9.9.3.21	M	V	½
	Spare half octet	Spare half octet 9.9.2.9	M	V	½
	Authentication parameter RAND (EPS challenge)	Authentication parameter RAND 9.9.3.3	M	V	16
	Authentication parameter AUTN (EPS challenge)	Authentication parameter AUTN 9.9.3.2	M	LV	17
	PLMN Identity	PLMN identity x.x.x.x (spec section number)	O	V	3

Table 2 below shows types of SMC messages according to exemplary embodiments of the present invention. Although the message types shown in Table 2 are used when the messages are transmitted from the target MME **114** to the UE **110** as in step **641** of FIG. **6**, exemplary embodiments of the present invention are not limited to the shown message types. Detailed information on the PLMN IDs of Table 2 can be referred to Table 3.

TABLE 2

IEI	Information Element	Type/Reference	Presence	Format	Length
	Protocol discriminator	Protocol discriminator 9.2	M	V	½
	Security header type	Security header type 9.3.1	M	V	½
	Security mode command message identity	Message type 9.8	M	V	1
	Selected NAS security algorithms	NAS security algorithms 9.9.3.23	M	V	1
	NAS key set identifier	NAS key set identifier 9.9.3.21	M	V	½
	Spare half octet	Spare half octet 9.9.2.9	M	V	½
	Replayed UE security capabilities	UE security capability 9.9.3.36	M	LV	3-6
C-	IMEISV request	IMEISV request 9.9.3.18	O	TV	1
	Replayed nonce$_{UE}$	Nonce 9.9.3.25	O	TV	5
56	Nonce$_{MME}$	Nonce 9.9.3.25	O	TV	5
	PLMN Identity	PLMN identity x.x.x.x	O	V	3

Table 3 below shows PLMN ID Information Elements (IEs) included in the authentication request message or the SMC message of Tables 1 and 2 according to exemplary embodiments of the present invention, which correspond to IEs for notifying of information to be included in order to send the PLMN identities to the UE **110**. Further, the PLMN ID IEs are not limited to the message types shown in Table 3. The PLMN ID IEs are IEs of type 3 and have a length of 4 octets. The MCC indicates a Mobile Country Code, in which octet 2 and octet 3 are configured in bits 1 to 4, and the MNC indicates a Mobile Network Code, in which octet 4 and octet 3 are configured in bits 5 to 8.

TABLE 3

8 7 6 5 4 3 2 1		
PLMN identity IEI		octet 1
MCC digit 2	MCC digit 1	octet 2
MNC digit 3	MCC digit 3	octet 3
MNC digit 2	MNC digit 1	octet 4

MCC, Mobile country code (octet 3, octet 4 bits 1 to 4)

The MCC field is coded as in ITU-T Rec. E212, Annex A.

MNC, Mobile network code (octet 5, octet 4 bits 5 to 8). The coding of this field is the responsibility of each administration but BCD coding shall be used. The MNC shall consist of 2 or 3 digits. For PCS 1900 for NA, Federal regulation mandates that a 3-digit MNC shall be used. However a network operator may decide to use only two digits in the MNC over the radio interface. In this case, bits 5 to 8 of octet 4 shall be coded as "1111". Mobile equipment shall accept MNC coded in such a way.

In a mobile communication network according to exemplary embodiments of the present invention, when a UE performs a handover between PLMNs, especially when a UE performs a handover from a EUTRAN or another RAT (e.g., such as GETRAN or UTRAN) to another EUTRAN, it is possible to resolve problems associated with the authentication and security of the UE, thereby preventing interruption of communication.

Further, exemplary embodiments of the present invention propose a method capable of smoothly performing an authentication of a UE and a security mode command for the UE even during a handover of the UE between PLMNs by using a NAS protocol, so as to achieve an efficient mobility management of the UE.

While the invention has been shown and described with reference to certain exemplary embodiments thereof, it will be understood by those skilled in the art that various changes in form and details may be made therein without departing from the spirit and scope of the invention as defined by the appended claims and their equivalents.

What is claimed is:

1. A method for performing a security procedure by a mobility management entity (MME) in a mobile communication system, the method comprising:

receiving, from a terminal, a tracking area update (TAU) request message including a public land mobile network identity (PLMN ID) after a handover of the terminal;

comparing the PLMN ID included in the TAU request message with a PLMN ID of a cell; and

transmitting, to the terminal, an authentication request message if the PLMN ID included in the TAU request message is different from the PLMN ID of the cell and a TAU procedure is complete,

wherein the PLMN ID is included in a globally unique temporary identifier (GUTI) included in the TAU request message.

2. The method of claim **1**, wherein the cell is the terminal is camped on.

3. The method of claim **1**, further comprising:

transmitting a TAU response message in response to the TAU request message to the terminal.

4. The method of claim **1**, further comprising:

receiving an authentication response message from the terminal if an authentication vector is verified.

5. The method of claim **1**, further comprising:

transmitting a security mode command (SMC) message to the terminal if the PLMN ID included in the TAU request message is different from the PLMN ID of the cell and the TAU procedure is complete.

6. The method of claim **1**, wherein the PLMN ID of the cell is one of a plurality of PLMN IDs managed by the MME.

7. The method of claim **1**, further comprising:

transmitting, by a source MME/SGSN, a relocation command message to a source evolved Node B/radio network controller (eNB/RNC);

transmitting, by the source eNB/RNC, a handover command message to the terminal; and

transmitting, by a target eNB, to a target serving GPRS support node (SGSN) a handover notification message if the terminal completes the handover to the target eNB.

8. The method of claim **1**, if the PLMN ID included in the TAU request message is different from the PLMN ID of the cell, further comprising:

generating a request for an identity of the terminal to the terminal;

receiving the identity of the terminal from the terminal;

transmitting the received identity of the terminal and the PLMN ID of the cell to a home subscriber server (HSS);

receiving an authentication key (K_{ASME}) and an authentication vector from the HSS;

transmitting an authentication request message including the authentication key, the authentication vector, and the PLMN ID of the cell to the terminal; and

receiving a response message to the authentication request message from the terminal.

9. The method of claim **8**, further comprising:

verifying if the response message is an authentication response message received from the terminal, to which the MME has sent the authentication request message, by comparing an authentication key included in the response message with an expected authentication key.

10. A mobility management entity (MME) apparatus for performing a security procedure in a mobile communication system, the apparatus comprising:

a transceiver configured to transmit and receive messages; and

a controller configured to:

receive, from a terminal, a tracking area update (TAU) request message including a public land mobile network identity (PLMN ID),

after a handover of the terminal, compare the PLMN ID included in the TAU request message with a PLMN ID of a cell, and

transmit, to the terminal, an authentication request message if the PLMN ID included in the TAU request message is different from the PLMN ID of the cell and a TAU procedure is complete,

wherein the PLMN ID is included in a globally unique temporary identifier (GUTI) included in the TAU request message.

11. The apparatus of claim **10**, wherein the cell is the terminal is camped on.

12. The apparatus of claim **10**, further comprising:

a transmitter configured to transmit a TAU response message in response to the TAU request message to the terminal.

13. The apparatus of claim **10**, further comprising:

a receiver configured to receive an authentication response message from the terminal if an authentication vector is verified.

14. The apparatus of claim **10**, wherein the controller is further configured to transmit a security mode command (SMC) message to the terminal if the PLMN ID included in the TAU request message is different from the PLMN ID of the cell and the TAU procedure is complete.

15. The apparatus of claim **10**, wherein the PLMN ID of the cell is one of a plurality of PLMN IDs managed by the MME.

16. The apparatus of claim **10**, wherein, if the PLMN ID included in the TAU request message is different from the PLMN ID of the cell, the controller is further configured to:

generate a request for an identity of the terminal to the terminal, to receive the identity of the terminal from the terminal,

transmit the received identity of the terminal and the PLMN ID of the cell to a home subscriber server (HSS),

receive an authentication key (K_{ASME}) and an authentication vector from the HSS,

transmit an authentication request message including the authentication key, the authentication vector, and the PLMN ID of the cell to the terminal, and

receive a response message to the authentication request message from the terminal.

17. The apparatus of claim **16**, wherein the controller is further configured to verify if the response message is an authentication response message received from the terminal, to which the MME has sent the authentication request message, by comparing an authentication key included in the response message with an expected authentication key.

18. A method for performing a security procedure by a terminal in a mobile communication system, the method comprising:

transmitting, to a mobility management entity (MME), a tracking area update (TAU) request message including a public land mobile network identity (PLMN ID) after a handover of the terminal; and

receiving, from the MME, an authentication request message if the PLMN ID included in the TAU request message is different from a PLMN ID of a cell and a TAU procedure is complete,

wherein the PLMN ID is included in a globally unique temporary identifier (GUTI) included in the TAU request message.

19. The method of claim **18**, wherein the cell is the terminal is camped on.

20. The method of claim **18**, further comprising:

receiving, by the terminal, a TAU response message in response to the TAU request message from the MME.

21. The method of claim **18**, further comprising:

transmitting an authentication response message to the MME if an authentication vector is verified.

22. The method of claim **18**, further comprising:

receiving a security mode command (SMC) message from the MME if the PLMN ID included in the TAU request message is different from the PLMN ID of the cell and the TAU procedure is complete.

23. The method of claim **18**, wherein the PLMN ID of the cell is one of a plurality of PLMN IDs managed by the MME.

24. The method of claim **18**, if the PLMN ID included in the TAU request message is different from the PLMN ID of the cell, further comprising:

transmitting an identity response message including an identity of the terminal to the MME as a response to a request for the identity of the terminal from the terminal;

receiving an authentication request message including an authentication key, an authentication vector, and the PLMN ID of the cell from the MME;

verifying the authentication vector and calculating the authentication key by using a new PLMN ID; and

transmitting an authentication response message including the calculated authentication key to the MME as a response to the authentication request message.

25. A terminal apparatus for performing a security procedure by a terminal in a mobile communication system, the apparatus comprising:

a transceiver configured to transmit and receive messages; and

a controller configured to:

transmit, to a mobility management entity (MME), a tracking area update (TAU) request message including a public land mobile network identity (PLMN ID) after a handover of the terminal, and

receive, from the MME, an authentication request message if the PLMN ID included in the TAU request message is different from a PLMN ID of a cell and a TAU procedure is complete,

wherein the PLMN ID is included in a globally unique temporary identifier (GUTI) included in the TAU request message.

26. The apparatus of claim **25**, wherein the cell is the terminal is camped on.

27. The apparatus of claim **25**, further comprising:

a receiver configured to receive a TAU response message in response to the TAU request message from the MME.

28. The apparatus of claim **25**, further comprising:

a transmitter configured to transmit an authentication response message to the MME if an authentication vector is verified.

29. The apparatus of claim **25**, wherein the controller is further configured to receive a security mode command (SMC) message from the MME if the PLMN ID included in the TAU request message is different from the PLMN ID of the cell and the TAU procedure is complete.

30. The apparatus of claim **25**, wherein the PLMN ID of the cell is one of a plurality of PLMN IDs managed by the MME.

31. The apparatus of claim **25**, wherein, if the PLMN ID included in the TAU request message is different from the PLMN ID of the cell, the controller is further configured to:

transmit an identity response message including an identity of the terminal to the MME as a response to a request for the identity of the terminal from the terminal,

receive an authentication request message including an authentication key, an authentication vector, and the PLMN ID of the cell from the MME,

verify the authentication vector and to calculate the authentication key by using a new PLMN ID, and

transmit an authentication response message including the calculated authentication key to the MME as a response to the authentication request message.

* * * * *