US009467200B2

(12) **United States Patent**
Sun et al.

(10) **Patent No.: US 9,467,200 B2**
(45) **Date of Patent: *Oct. 11, 2016**

(54) **METHOD AND APPARATUS FOR ORTHOGONALLY OVERLAYING VARIABLE CHIP RATE SPREAD SPECTRUM SIGNALS**

(75) Inventors: **Feng-Wen Sun**, Germantown, MD (US); **Lin-Nan Lee**, Potomac, MD (US); **Khalid Karimullah**, Olney, MD (US)

(73) Assignee: **The DIRECTV Group, Inc.**, El Segundo, CA (US)

(*) Notice: Subject to any disclaimer, the term of this patent is extended or adjusted under 35 U.S.C. 154(b) by 1681 days.

This patent is subject to a terminal disclaimer.

(21) Appl. No.: **12/404,251**

(22) Filed: **Mar. 13, 2009**

(65) **Prior Publication Data**

US 2009/0213904 A1 Aug. 27, 2009

Related U.S. Application Data

(60) Continuation of application No. 12/009,275, filed on Jan. 17, 2008, now Pat. No. 7,505,440, which is a continuation of application No. 10/346,876, filed on Jan. 17, 2003, now Pat. No. 7,342,904, which is a division of application No. 09/115,256, filed on Jul. 13, 1998, now Pat. No. 6,510,147.

(60) Provisional application No. 60/052,574, filed on Jul. 15, 1997.

(51) **Int. Cl.**

H04B 1/707	(2011.01)
H04J 13/00	(2011.01)
H04J 13/18	(2011.01)
H04W 52/26	(2009.01)

(52) **U.S. Cl.**

CPC ***H04B 1/707*** (2013.01); ***H04J 13/0048*** (2013.01); *H04J 13/18* (2013.01); *H04W 52/26* (2013.01)

(58) **Field of Classification Search**

CPC H04B 1/707
USPC 370/493–495
See application file for complete search history.

(56) **References Cited**

U.S. PATENT DOCUMENTS

4,425,642	A *	1/1984	Moses et al.	370/477
5,438,590	A	8/1995	Tzukerman et al.	
5,465,396	A *	11/1995	Hunsinger et al.	455/61

(Continued)

OTHER PUBLICATIONS

Non-final Office action dated May 5, 2010 in U.S. Appl. No. 12/435,237, filed May 4, 2009 by Mustafa Eroz et al.

(Continued)

Primary Examiner — Ronald B Abelson

(57) **ABSTRACT**

A system and method for transmitting wideband signals via a radio communication system adapted for transmitting narrow-band signals is described. A base station is used to transmit and receive a plurality of relatively narrow-band and a plurality of relatively wideband signals. The electromagnetic spectrum available to the plurality of narrow-band signals is selectively shared with the electromagnetic spectrum available to the wideband signals by systematically separating the orthogonal codes and the carrier frequencies used for transmission. The prefixes of the orthogonal codes are preferably mutually exclusive and the carrier frequencies are preferably separated by an offset. The offset may be substantially equal to an integer multiple of the narrow-band signal's chip rate. Alternatively, the offset may be substantially equal to an odd multiple of one half the narrow-band signal's chip rate in which case every other bit of the orthogonally encoded data is inverted.

16 Claims, 8 Drawing Sheets

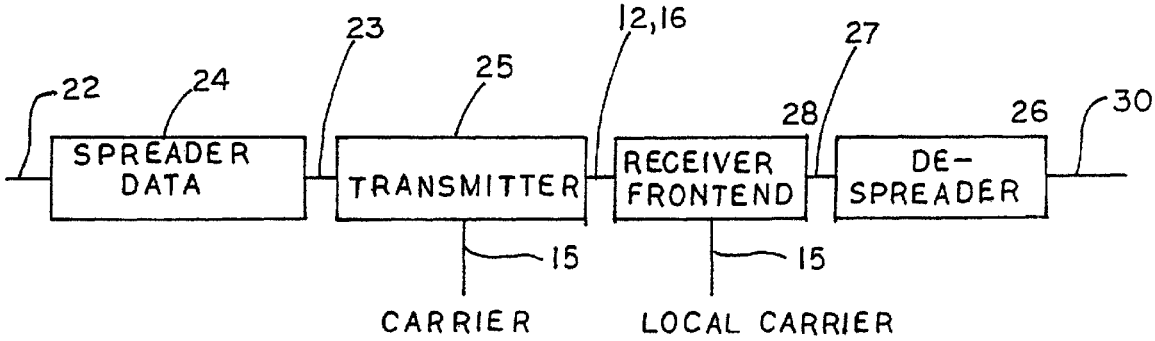

(56) **References Cited**

U.S. PATENT DOCUMENTS

5,471,463	A	*	11/1995	Hulbert	H04B 7/2628 370/335
5,604,744	A		2/1997	Andersson et al.	
5,729,557	A		3/1998	Gardner et al.	
5,751,761	A	*	5/1998	Gilhousen	375/146
5,812,601	A		9/1998	Schramm	
5,830,064	A	*	11/1998	Bradish et al.	463/22
5,907,582	A		5/1999	Yi	
5,944,850	A		8/1999	Chouly et al.	
5,949,796	A		9/1999	Kumar	
5,966,377	A		10/1999	Murai	
5,970,400	A	*	10/1999	Dwyer	455/254
5,983,385	A		11/1999	Khayrallah et al.	
5,996,104	A		11/1999	Herzberg	
6,021,309	A	*	2/2000	Sherman et al.	455/12.1
6,023,783	A		2/2000	Divsalar et al.	
6,038,263	A		3/2000	Kotzin et al.	
6,064,663	A	*	5/2000	Honkasalo et al.	370/335
6,088,387	A		7/2000	Gelblum et al.	
6,122,260	A		9/2000	Liu et al.	
6,161,209	A		12/2000	Moher	
6,222,828	B1		4/2001	Ohlson et al.	
6,233,456	B1		5/2001	Schiff et al.	
7,536,624	B2		5/2009	Eroz et al.	

OTHER PUBLICATIONS

Notice of Allowance dated Nov. 10, 2010 in U.S. Appl. No. 12/435,237, filed May 4, 2009 by Mustafa Eroz et al.

Non-final Office action dated Jan. 28, 2011 in U.S. Appl. No. 11/999,561, filed Dec. 6, 2007 by Feng-Wen Sun et al.

Final Rejection dated Jul. 19, 2011 in U.S. Appl. No. 11/999,561, filed Dec. 6, 2007 by Feng-Wen Sun et al.

Notice of Allowance dated Nov. 19, 2015 in U.S. Appl. No. 14/714,179, filed May 15, 2015 by Mustafa Eroz et al.

Final Rejection dated Mar. 26, 2014 in U.S. Appl. No. 13/936,925, filed Jul. 8, 2013 by Mustafa Eroz et al.

Barbulescu, A.S.; Pietrobon, S.S.; "Interleaver Design for Turbo Codes"; Dec. 8, 1994; Space Centre for Signal Process; South Australia University; IEEE vol. 30, Issue 25; pp. 2107-2108.

Notice of Allowance dated Jan. 11, 2012 in U.S. Appl. No. 11/999,561, filed Dec. 6, 2007 by Feng-Wen Sun et al.

Non-final Office action dated Jul. 6, 2015 in U.S. Appl. No. 14/714,179, filed May 15, 2015 by Mustafa Eroz et al.

Notice of Allowance dated Mar. 5, 2013 in U.S. Appl. No. 13/025,378, filed Feb. 11, 2011 by Mustafa Eroz et al.

Benedetto, Sergio; Montorsi, Guido; "Design Guidelines of Parallel Concatenated Convolutional Codes"; IEEE Globecon; 1995; pp. 2273-2277.

Notice of Allowance dated Nov. 30, 2011 in U.S. Appl. No. 13/025,378, filed Feb. 11, 2011 by Mustafa Eroz et al.

Woodard, J.P. et al.; "Turbo Coded Orthogonal Frequency Division Multiplex Transmission of 8 kbps Encoded Speech"; ACTS Summit '97; Aalborg, Denmark; Oct. 7-10, 1997; pp. 894-899.

Non-final Office action dated Nov. 21, 2013 in U.S. Appl. No. 13/936,925, filed Jul. 8, 2013 by Mustafa Eroz et al.

Benedetto, Sergio et al.; "Design of Parallel Concatenated Convolutional Codes"; May 1996; IEEE Transactions of Communications; vol. 44, No. 5; pp. 591-600.

Notice of Allowance dated Jan. 15, 2015 in U.S. Appl. No. 13/936,925, filed Jul. 8, 2013 by Mustafa Eroz et al.

* cited by examiner

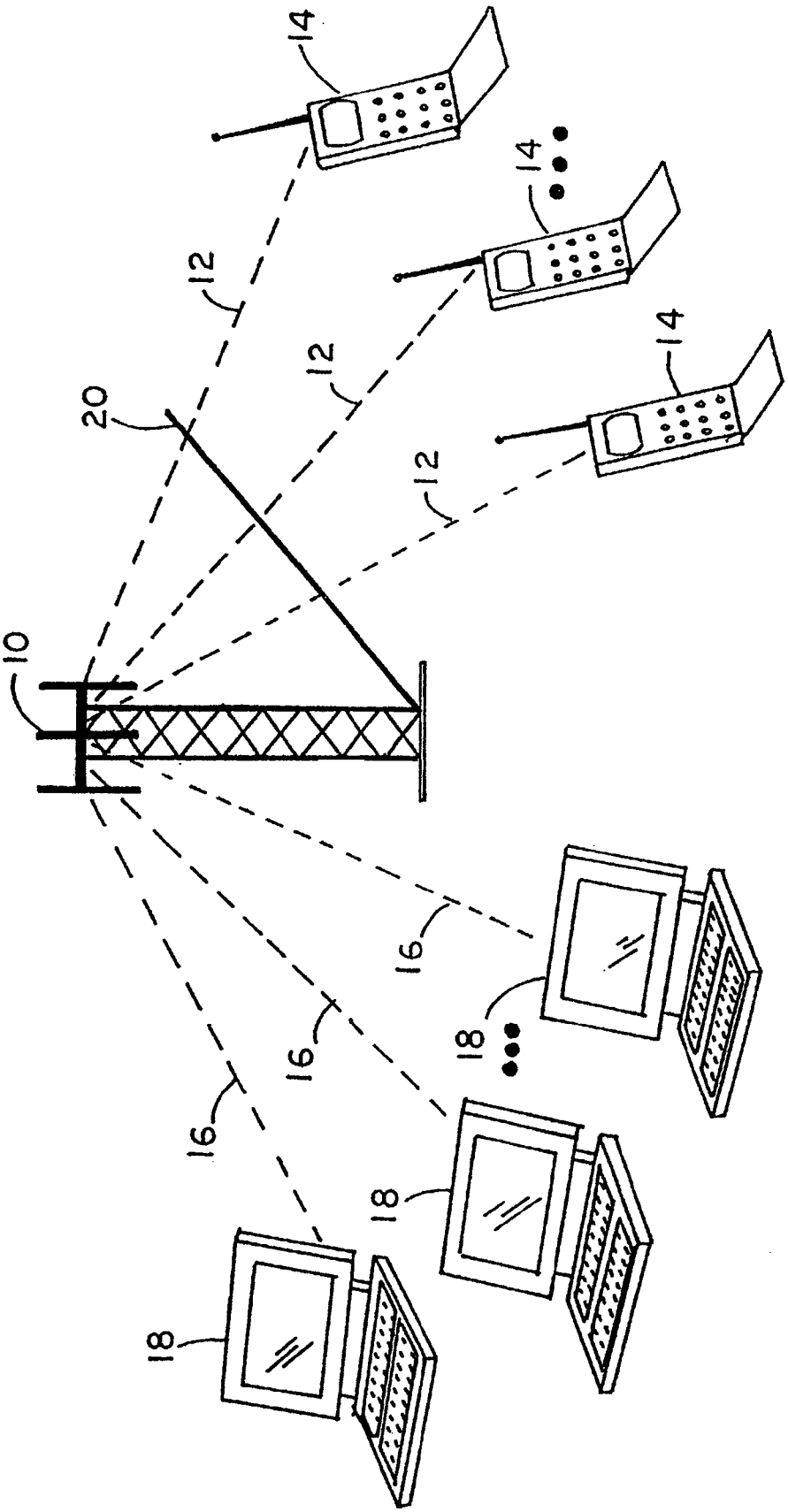

FIG.1

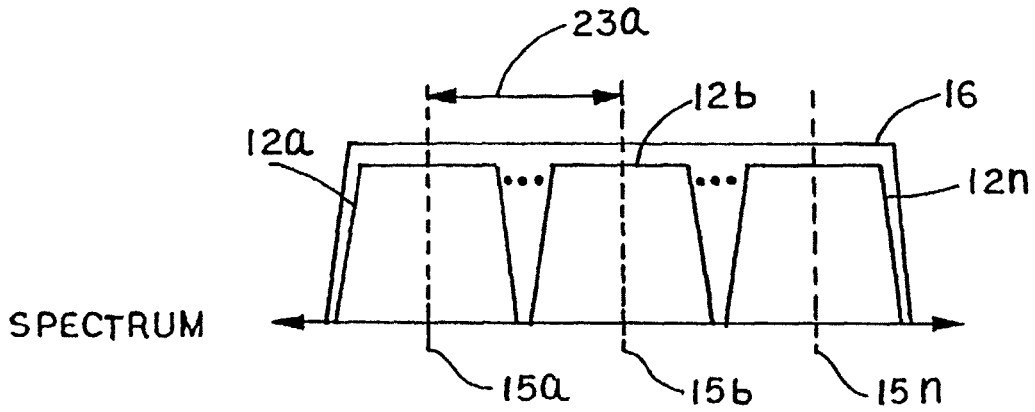
23a
12b
16
12a
12n
SPECTRUM
15a
15b
15n

FIG. 2

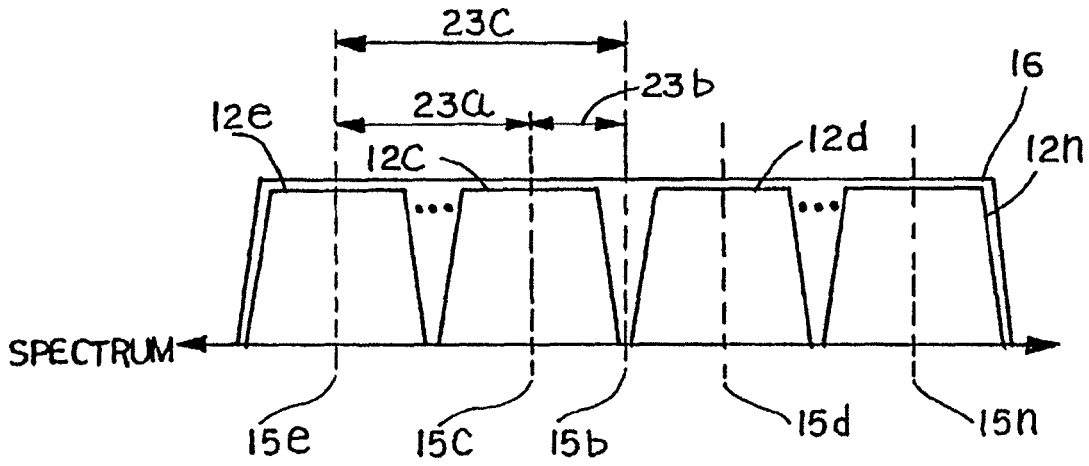
23c
23b
16
12e
23a
12d
12c
12n
SPECTRUM
15e
15c
15b
15d
15n

FIG. 3

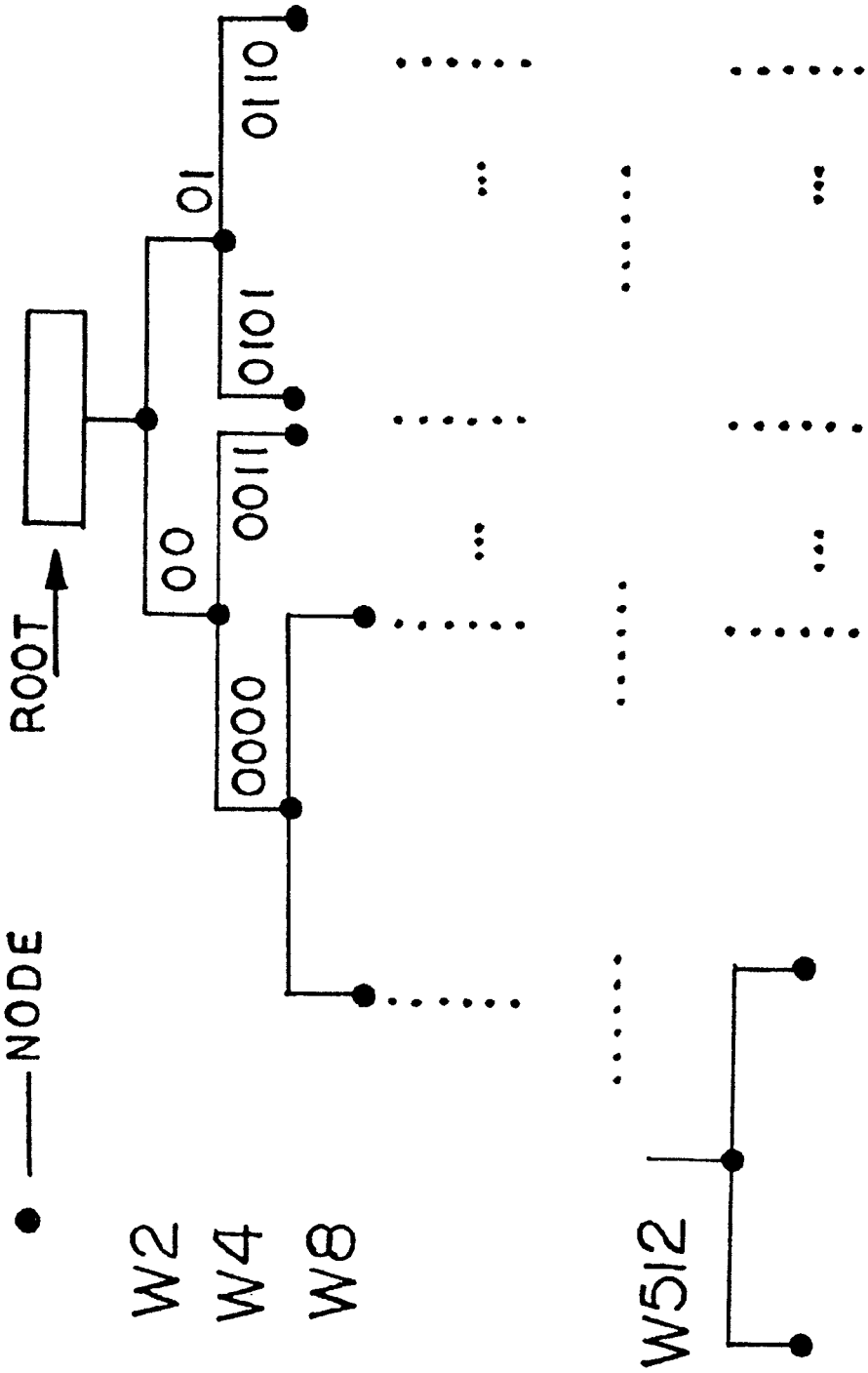

FIG.4

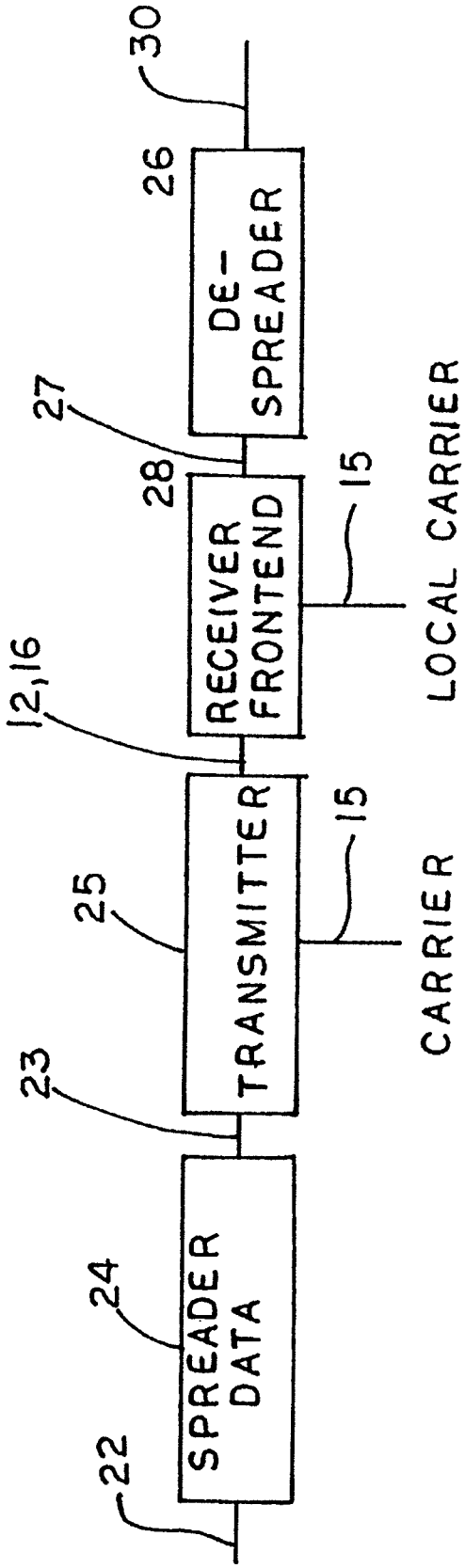
30
26
DE-
SPREADER
27
28
RECEIVER
FRONTEND
15
LOCAL CARRIER
12,16
25
TRANSMITTER
15
CARRIER
23
24
SPREADER
DATA
22

FIG. 5

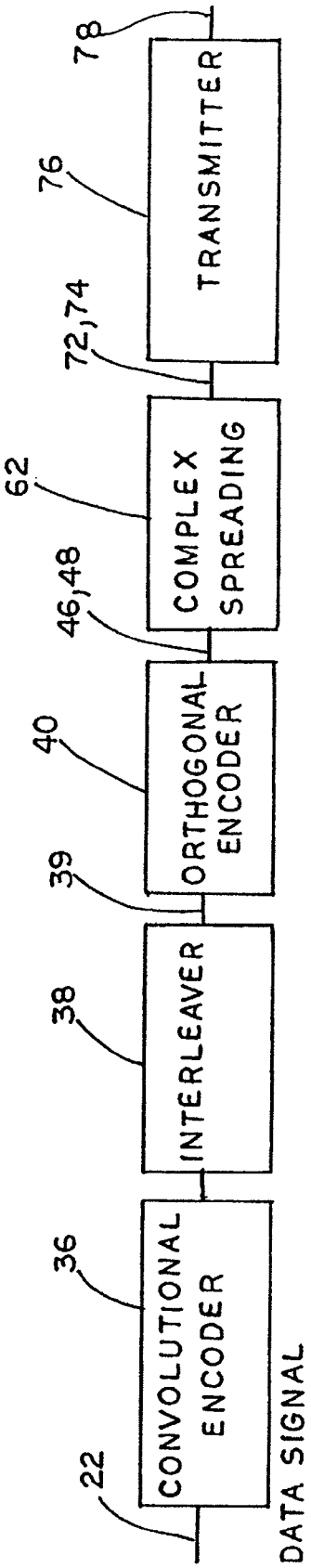
22
CONVOLUTIONAL ENCODER
36
DATA SIGNAL
INTERLEAVER
38
39
ORTHOGONAL ENCODER
40
46,48
COMPLEX SPREADING
62
72,74
TRANSMITTER
76
78

FIG. 6

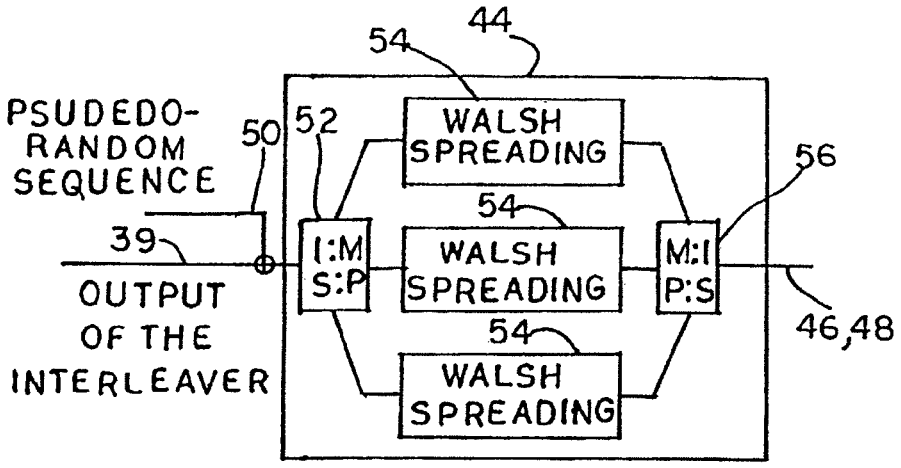

FIG.9

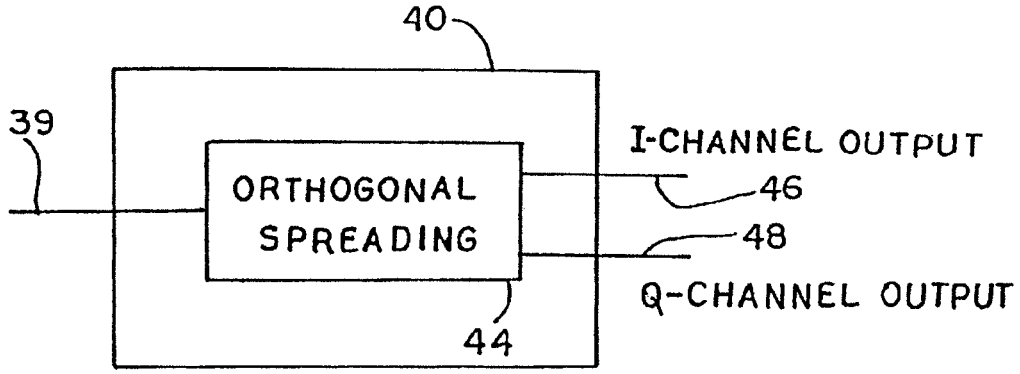

FIG 8

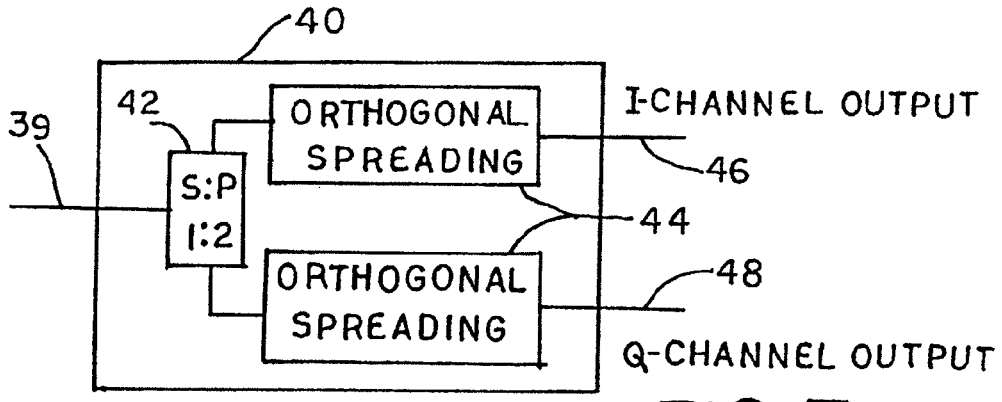

FIG. 7

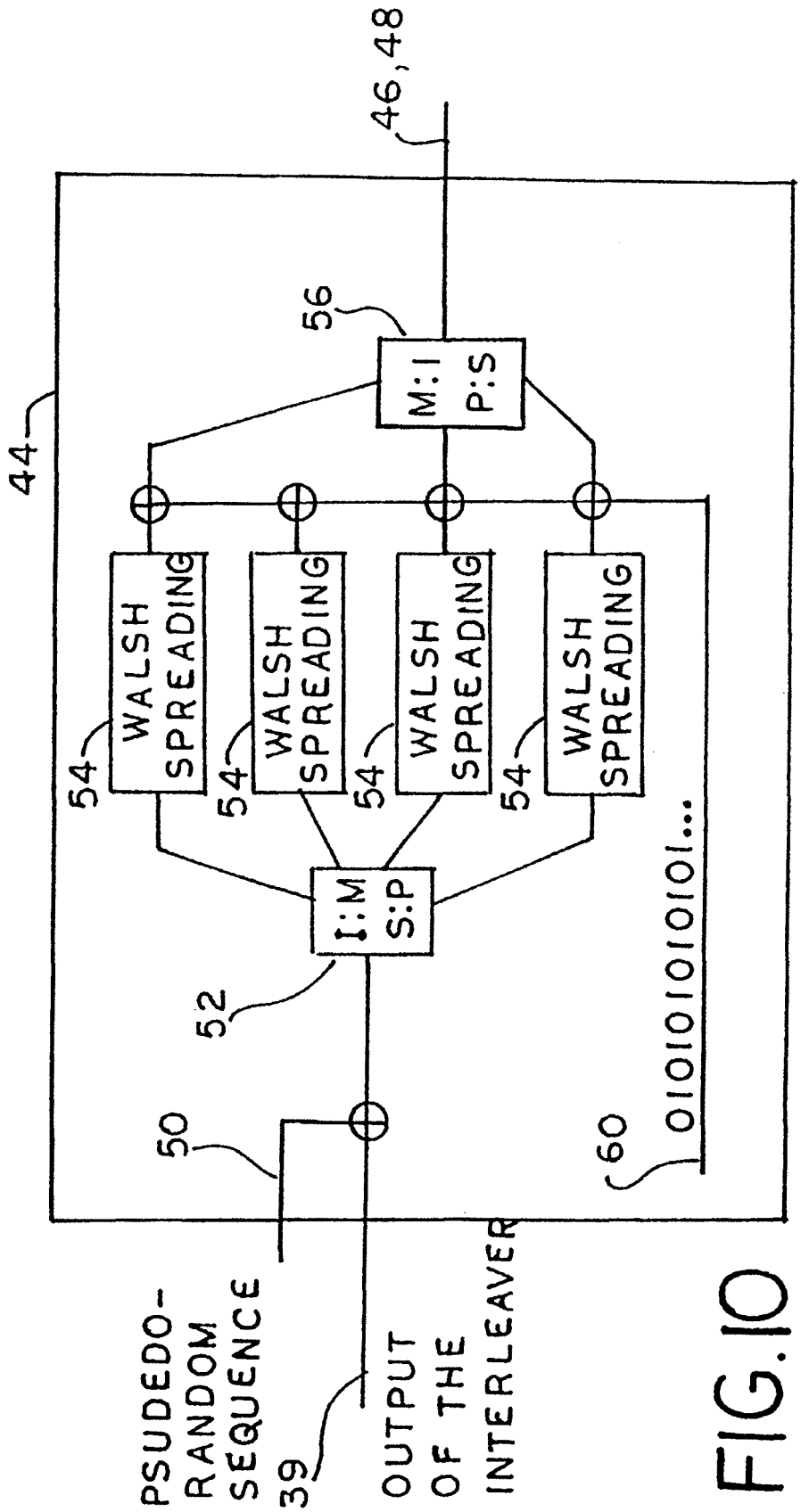
46,48
56
M:1
P:S
44
WALSH SPREADING
54
WALSH SPREADING
54
WALSH SPREADING
54
WALSH SPREADING
54
1:M
S:P
52
50
60
0101010101010101...
PSUDEDO-RANDOM SEQUENCE
39
OUTPUT OF THE INTERLEAVER

FIG. 10

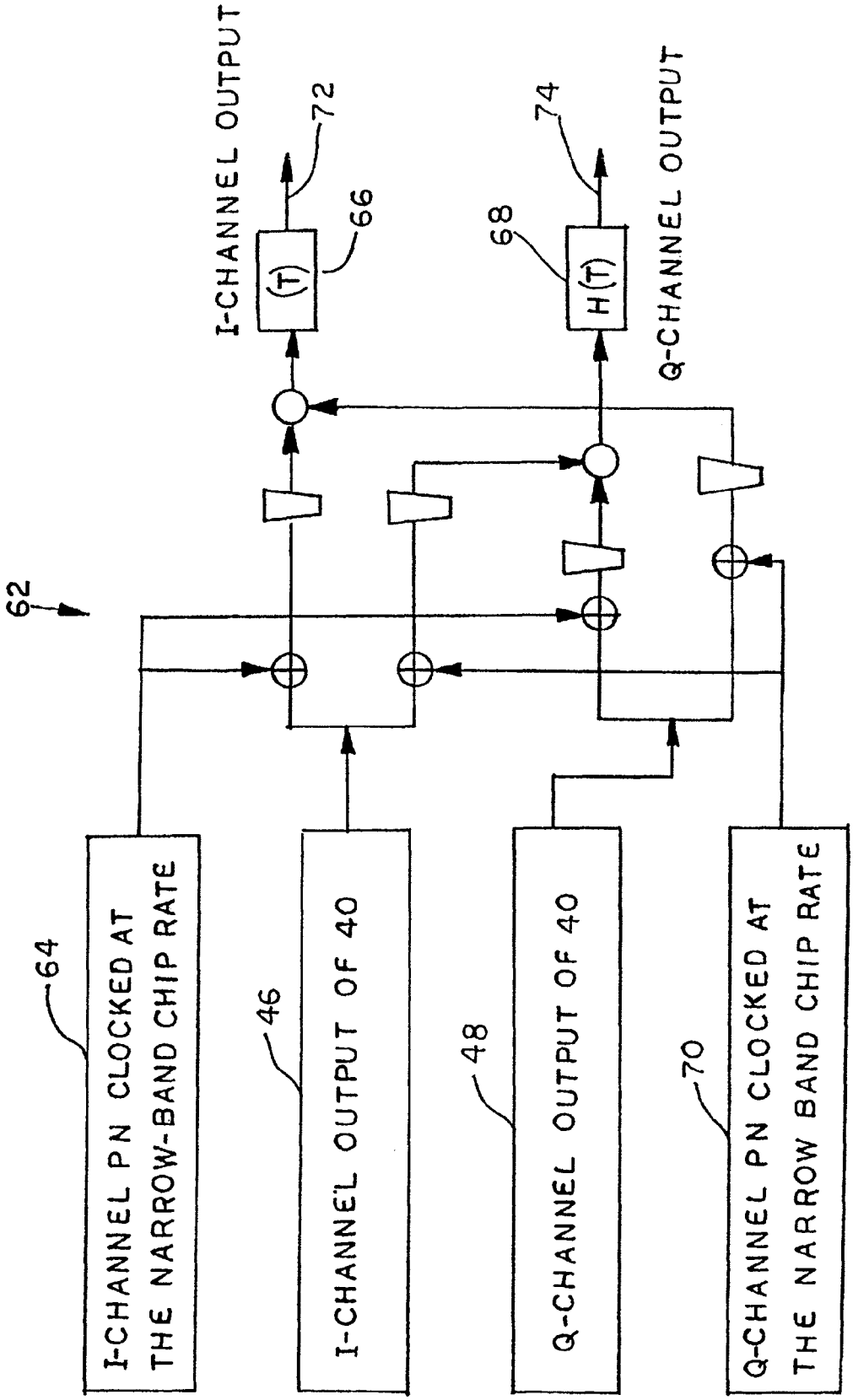
62
64
I-CHANNEL PN CLOCKED AT THE NARROW-BAND CHIP RATE
46
I-CHANNEL OUTPUT OF 40
48
Q-CHANNEL OUTPUT OF 40
70
Q-CHANNEL PN CLOCKED AT THE NARROW BAND CHIP RATE
(T)
66
H(T)
68
I-CHANNEL OUTPUT
72
Q-CHANNEL OUTPUT
74

FIG. 11

METHOD AND APPARATUS FOR ORTHOGONALLY OVERLAYING VARIABLE CHIP RATE SPREAD SPECTRUM SIGNALS

RELATED APPLICATION

This application claims priority from U.S. provisional application Ser. No. 60/052,574 which was filed on Jul. 15, 1997.

TECHNICAL FIELD OF THE INVENTION

The present invention relates generally to radio communication systems, and more particularly to a method and apparatus for transmitting wideband signals via a communications system adapted for transmitting narrow-band signals.

BACKGROUND OF THE INVENTION

Radio communication systems rely on modulating carrier frequencies in a finite portion of the electromagnetic spectrum to wirelessly transmit and receive signals. Modulation can be performed on the amplitude, frequency, and/or phase of the carrier frequency to separate the signal from unwanted noise. The signals typically convey information such as voice, video, and computer data to and from transceiving devices such as cellular base stations, cellular subscriber units, and personal computers.

The portion of the electromagnetic spectrum occupied by a particular transmission or communication system (i.e. bandwidth) may be wide or narrow. Wideband signals can be used to transmit large amounts of data in a relatively short period of time. For example, large computer data files and real-time video could benefit from a wideband signal. Narrow-band signals can be used to conserve the electromagnetic spectrum when transmitting signals with more modest requirements. For example, base stations and cellular subscriber units in most conventional cellular communication systems transmit and receive voice signals using a relatively narrow-band signal.

The amount of usable electromagnetic spectrum is limited by technology, environment, and cost. Extremely high frequency signals require expensive transceiving equipment. Accordingly, communication systems benefit by sharing desirable frequencies. Well known multiple access techniques, such as code division multiple access (CDMA), time division multiple access (TDMA), and frequency division multiple access (FDMA) can be used by a communication system to share the electromagnetic spectrum available to that system.

Spread spectrum communication systems transmit signals occupying a bandwidth in excess of the minimum necessary to send the information. Spreading may be accomplished by means of a code which is independent of the data. Each symbol of the spreaded signal is a chip. The chip rate determines the bandwidth of the signal; and, the ratio of the chip rate to the incoming information data rate is the spreading gain. In the mobile communication industry, a redundancy code such as a forward error correction code is also generally included when computing the total spreading gain.

In spread spectrum CDMA systems a predefined chip rate (i.e. one bandwidth) is typically used so that orthogonality can be readily achieved using binary orthogonal codes (e.g., Walsh codes) thus minimizing intra-cell interference. The chip rate is the rate (i.e., frequency) at which changes (i.e., modulations) are being made to the carrier frequency. There are many reasons for spreading the spectrum. One application in a mobile communications environment is to achieve efficient multiple access (i.e., CDMA). By spreading the signal to wider bandwidth, CDMA allows multiple users to share the same frequency band at the same time. More conventional applications for spread spectrum communications include anti-jamming, anti-interference, and low probability of intercept.

Prior art approaches to bandwidth utilization suffer from certain drawbacks. For instance, prior art approaches do not allow wideband signals to occupy excess capacity in a narrow band system or narrow-band signals to occupy excess capacity in a wide band system. Further, prior art approaches require new communications systems infrastructure (e.g., base stations) to support new types of signals (i.e., signals using different bandwidths).

As known in the art, a wide-band spreaded signal can in principal overlay one or more narrow-band signals that are transmitted simultaneously with the wideband signal. Spreaded signals occupy a bandwidth that is wider than necessary for their transmission, thereby spreading their total power across a wideband spectrum with respect to narrow-band underlay signals. Ideally, narrow-band receivers recognize the portion of the spreaded signal within their narrow spectrum as noise and can discriminate their narrow-band signals from the interfering wideband signals.

In practice, simple spreading of a wideband signal fails to provide a workable overlay solution. For example, in the cellular/data system discussed above, a spreaded wideband transmission on the forward link (i.e. cell site to mobile station) introduces sufficient spectral power within the underlay narrow-band spectrum so that interference becomes intolerable, or discrimination at the narrow-band mobile user's units becomes cost prohibitive or infeasible.

SUMMARY OF THE INVENTION

In accordance with a first aspect of the invention, a system for transmitting data having first and second bandwidths, the second bandwidth being narrower than the first bandwidth, is provided. The system comprises a means for dividing the first bandwidth data into a predefined number of data streams based on the ratio of the first and second bandwidths, a means for encoding the first bandwidth data streams with a first orthogonal code selected from a set of mutually orthogonal codes, a means for combining the orthogonally encoded data streams into a first bandwidth spreaded signal, and a means for encoding the second bandwidth data to produce a second bandwidth spreaded signal. The first bandwidth and second bandwidth codes are selected from a set of mutually orthogonal codes so that no first or second bandwidth code or its complement is a prefix for another first or second bandwidth code or its complement. For even second to first bandwidth ratios every other bit of each first bandwidth data stream may be inverted. The system further comprises a first transmitter for transmitting the first bandwidth spreaded signal at a first carrier frequency and a second transmitter for transmitting the second bandwidth signal at a second carrier frequency. The second transmitter operates at a predefined chip rate, wherein the first and second carrier frequencies are substantially separated by an integer multiple for odd second to first bandwidth ratios, or an integer multiple plus one-half of the predefined chip rate for even second to first bandwidth ratios.

BRIEF DESCRIPTION OF THE DRAWINGS

These and other features and advantages of the present invention will become more apparent from a detailed consideration of the following detailed description of certain preferred embodiments when taken in conjunction with the drawings in which:

FIG. **1** is a schematic illustration of a communication system capable of utilizing the teachings of the present invention;

FIG. **2** is a spectral diagram of a wideband signal and narrow-band signals transmitted in accordance with the teachings of the invention;

FIG. **3** is a spectral diagram of a wideband signal and narrow-band signals transmitted in accordance with the teachings of the invention;

FIG. **4** is a diagram of Walsh tree;

FIG. **5** is a block diagram of a typical code-division multiple access transmitter and receiver;

FIG. **6** is a block diagram of a system embodying aspects of the present invention;

FIG. **7** is a more detailed diagram one possible orthogonal encoder of FIG. **6** in accordance with the teachings of the present invention;

FIG. **8** is a more detailed diagram of another possible orthogonal encoder of FIG. **6** in accordance with the teachings of the present invention;

FIG. **9** is a more detailed diagram of a possible orthogonal spreader of FIG. **6** for wideband signals;

FIG. **10** is a more detailed diagram of another possible orthogonal spreader of FIG. **6** for wideband signals;

FIG. **11** is a more detailed diagram of the complex spreader of FIG. **6**.

DETAILED DESCRIPTION OF THE PREFERRED EMBODIMENTS

Although for simplicity of explanation, the following description focuses primarily on transmitting wideband signals via a radio communication system adapted for transmitting narrow-band signals, persons of ordinary skill in the art will readily appreciate that the techniques of the present invention are in no way limited to radio communications, to transmitting signals with only two distinct bandwidths, or to systems adapted for transmitting narrow-band signals. On the contrary, any communication system which might benefit from shared access to a plurality of frequencies by two or more transceivers transmitting and/or receiving signals at two or more bandwidths may employ the techniques shown herein. Such systems might include systems employing methods for transmitting narrow-band signals via a radio communication system adapted for transmitting wideband signals. Further, wired systems such as computer networks could employ the techniques provided herein without departing from the scope of the invention.

A representative communication system capable of utilizing the teachings of the present invention is shown in FIG. **1**. A base station **10**, such as a cellular communications base station, is used to transmit and receive a plurality of relatively narrow-band signals **12**, such as voice signals, to and from a plurality of narrow-band transceivers (transmitter/receiver) **14**, such as mobile cellular subscriber units. The base station **10** is typically coupled to a network **20**, such as a public switched telephone network (PSTN), the Internet, and/or any other analog or digital network. Radio signals (narrow-band signals **12** and/or wideband signals **16**) transmitted to the transceivers (narrow-band transceivers **14** and/or wideband transceivers **18**) by the base station **10** could originate from a device connected to the network **20**. Similarly, signals **12**, **16** transmitted to the base station **10** by the transceivers **14**, **18** could be destined for a device connected to the network **20**.

The narrow-band signal(s) **12** are transmitted by modulating one or more carrier frequencies **15** (shown in FIGS. **2** and **3**) with relatively narrow bandwidths (e.g. 1.25 MHz as is used for a conventional voice cellular channel). The narrow-band signal(s) **12** may represent digitally encoded voice signals, short data messages, and/or any other narrow-band signals or combinations of signals. Cooperation among the narrow-band transceivers (i.e. mobile units) **14** to share the available electromagnetic spectrum can be achieved using well known multiple access techniques such as code-division multiple access (CDMA.)

The base station **10** could also be used to transmit and receive a plurality of relatively wideband signals **16**, such as data signals, to and from a plurality of wideband transceivers **18**, such as computers. The wideband signal(s) **16** are transmitted by modulating a carrier frequency **15***b* with a relatively wide bandwidth (e.g., a bandwidth sufficient for transmitting a data signal such as 3.75 MHz). The wideband signal(s) **16** could be analog video signals, digitally encoded video signals, long data messages, and/or any other wideband signals or combinations of signals. Cooperation among the wideband transceivers **18** to share the available electromagnetic spectrum can be similarly achieved using well known multiple access techniques such as code-division multiple access (CDMA). Preferably, the wideband signal **16** is encoded with forward error correction codes such as turbo codes, or any convolutional code.

In conventional wireless communication systems wideband and narrow-band signals would occupy distinct regions of the electromagnetic spectrum to avoid interference. However, in a preferred embodiment of the present invention, the electromagnetic spectrum available to the plurality of narrow-band signals **12** is selectively shared with the electromagnetic spectrum available to the wideband signals **16**. Important aspects of the present invention minimize interference between wideband signals and narrow-band signals by maintaining orthogonality between the wideband overlay and narrow-band underlay signals. As discussed in greater detail below, the present invention maintains substantial orthogonality between wideband and narrow-band signals that share a common frequency spectrum by 1) selectively aligning or spacing the narrow-band carrier frequency/frequencies with respect to the wideband carrier frequency, 2) spreading signals with orthogonal codes particularly selected to minimize correlation between wideband and narrow-band signals, and 3) spreading the wideband signals by dividing them into a plurality of data streams, spreading the individual data streams, and then recombining the data streams before transmission.

Illustrated in FIG. **2** and FIG. **3** are spectral diagrams of a spreaded wideband signal **16** (i.e., an overlay signal) overlapping a plurality of narrow-band signals **12** (i.e., underlay signals). Although a limited number of signals **12**, **16** are shown, any number of narrow-band signals **12** and wideband signals **16** may be accommodated using the teachings of the present invention. Namely, one or many wideband signals **16** may overlay one or many narrow-band signals **12**. In any case, the narrow band signal(s) **12** share substantially the same frequency spectrum as the wideband signal(s) **16**.

One aspect of the present invention maintains orthogonality between wideband overlay and narrow-band underlay

signals by selectively aligning or spacing the narrow-band carrier frequency/frequencies with respect to the wideband carrier frequency. Preferably, the carrier frequencies for one or more narrow-band signals are selected so that they are spaced or offset from the wideband carrier frequency by an integer multiple of the narrow-band chip rate, or alternatively by an integer multiple of the narrow-band chip rate plus one-half the narrow-band chip rate.

By way of example only, FIG. **2** illustrates one or more narrow band signals **12** and carrier frequencies **15** that may be present and overlaid by a wideband signal **16**. The wideband signal **16** has a first carrier frequency **15***b* and overlays a first narrow-band signal **12***a* having a second carrier frequency **15***a*. In accordance with the present invention, the second carrier frequency **15***a* is spectrally separated from the wideband carrier frequency **15***b* by a first offset **23***a* such that the offset **23***a* corresponds to an integer multiple of the narrow-band chip rate. Similarly, the wideband signal **16** may overlay a second narrow-band signal **12***b* having the first carrier frequency **15***b* (i.e. the offset corresponds to the integer zero times the narrow-band chip rate). Those skilled in the art will immediately recognize that FIG. **2** most clearly illustrates the spectral overlay aspect of the present invention for situations where the ratio of the wideband chip rate to the narrow-band chip rate (i.e. ratio of the bandwidths) is an odd integer (e.g. three).

By way of example only, FIG. **3** most clearly illustrates the spectral overlay aspect of the present invention for situations where the ratio of the narrow-band chip rate to the wideband chip rate is an even integer (e.g. four). As shown, the wideband signal **16** may overlay one or more narrow-band signals **12**. The wideband signal **16** has the first carrier frequency **15***b* and may overlay a third narrow-band signal **12***c* having a third carrier frequency **15***c*. In accordance with the present invention, the third carrier frequency **15***c* is spectrally separated from the wideband carrier frequency **15***b* by a second offset **23***b* such that the offset **23***b* corresponds to an integer multiple of the narrow-band chip rate or bandwidth plus one-half the narrow-band chip rate (i.e. zero times the narrow-band chip rate plus 0.5 times the narrow-band chip rate). Similarly, the wideband signal **16** may overlay a fourth narrow-band signal **12***e* having a fourth carrier frequency **15***e* that is spectrally separated from the wideband carrier frequency **15***b* by a third offset **23***c* (i.e. the offset corresponds to the integer one times the narrow-band chip rate plus one-half the narrow-band chip rate).

It is important to recognize that the number of underlay signals **12** present is not critical, but rather that any underlay signals that are present are preferably associated with carrier frequencies selectively spaced with respect to the wideband carrier frequency in accordance with the spectral overlay aspect of the present invention as discussed above.

Those skilled in the art will appreciate that, as a practical matter, the ratio of a wideband system's chip rate to that of a narrow-band system's chip rate may not result in a precise integer value as is preferred according to the spectral overlay aspect of the present invention described above. However, any interference between wideband signals and narrow-band signals resulting from imprecise carrier frequency spacings may be sufficiently mitigated by minimizing the spacing errors and through signal encoding that utilizes a particular set of orthogonal codes which are described in more detail below.

Another aspect of the present invention maintains orthogonality between wideband overlay and narrow-band underlay signals by selecting particular orthogonal codes. In a typical CDMA communication system orthogonal codes (e.g., Walsh codes) are used to spread a data stream and differentiate transmissions (i.e. maintain signal orthogonality).

Typically, each user, within a cell site for example, is assigned one or more orthogonal codes from a set of mutually orthogonal codes (e.g., Walsh codes) during the setup of a call. The user typically releases the assigned code in exchange for a new assigned code upon leaving a cell and entering a new cell.

By way of example only, each user's data stream is mapped to a Walsh code so that a logical one maps to the orthogonal code itself and logical zero maps to its binary complement or vice versa. In accordance with the present invention, orthogonal codes are selected from the set of Walsh codes to minimize potential correlation between wideband overlay signals and narrow-band underlay signals.

The set of Walsh codes can be generated using a Hadamard matrix. A Hadamard matrix of order n can be defined recursively as:

$$W_{2n} = \begin{bmatrix} W_n & W_n \\ W_n & \overline{W_n} \end{bmatrix}$$

Where W_1 is defined as $W_1=[0]$ and $\overline{W_1}$ is the binary complement of W_1. A Walsh code of length 2n corresponds to a row of the matrix W_{2n}.

An alternative way to describe the Walsh codes is illustrated in FIG. **4**. The unique Walsh code of length one (e.g. zero) sits at the root of the tree. Each node is connected to two additional nodes having Walsh codes that are generated by creating two longer Walsh codes. One longer code is made from the common node's code value concatenated with itself, and the other is made from the common node's code concatenated with its complement. For example, the common node "00" generates and is connected to longer codes "0000" and "0011". Thus, each level of the tree shown in FIG. **4** is associated with Walsh codes of the same length, and code length grows by a factor of two for each additional level that is added to the tree.

For any two Walsh codes (two nodes in the tree, not necessarily at the same level), we can trace the tree toward the root until the traced back path first meets at a node. This common node along the traced back paths of two different Walsh codes is defined as the first common node. Note that the Walsh code represented by the first common node of two Walsh codes is the prefix of both Walsh codes and it is the largest common prefix.

In accordance with the present invention, Walsh codes may be selected from various levels of the tree and assigned to wideband and narrow-band users within a cell site, for example. Codes are preferably selected for the wideband and narrow-band users to that no assigned codes, or their complements, contain a prefix matching another shorter assigned code. For example, if the codes 01101001 and 10010110 (i.e. the complement) have been assigned to a narrow-band user then no wideband users or narrow-band users, within the same cell site, may be assigned the codes 01, 10, 0110, 1001 etc.

Those skilled in the art will recognize that selectively assigning Walsh codes to narrow-band and wideband users as described above minimizes correlation between wideband and narrow-band signals, and thereby minimizes intracell interference between wideband and narrow-band users.

In accordance with another aspect of the present invention, the selection and assignment of Walsh codes to wide-

band and narrow-band users may be further refined to reduce intracell interference. As discussed above, practical considerations may prevent precise alignment or spacing of the wideband carrier frequency with respect to the narrow-band carrier frequency/frequencies. For these situations it is preferable to select Walsh codes having first common nodes that are close to the root of the Walsh tree (shown in FIG. **4**), and additionally in accordance with the mutually exclusive prefix aspect discussed above. Walsh codes having first common nodes as close as possible to the root of the Walsh tree to minimize interference between signals because orthogonality can be achieved with a minimal amount of correlation time.

A typical CDMA communication system is shown in FIG. **5**. A data signal **22** representing a message to be sent is processed by a spreader **24** to produce a spreaded signal **23**. The spreading may be accomplished using pseudo-random codes, orthogonal codes, forward error correction codes, and/or any other code. The spreaded signal **23** is mixed with a carrier frequency **15** by a transmitter **25** to produce a radio signal (narrow-band signal **12** or wideband signal **16**). The spreader **24** and the transmitter **25** may be one of many which are integral to the base station **10** and/or transceivers **14**, **18**. The radio signal **12**, **16** is captured by a receiver front-end **28** (integral to the base station **10** and/or transceivers **14**, **18**) and is mixed with a locally generated carrier frequency **15** thereby downconverting it to an intermediate frequency or baseband signal **27**. The baseband signal **27** is processed by a despreader **26** to produce an estimate **30** of the data signal **22**.

A block diagram of a system embodying the above and other aspects of the present invention is depicted generally in FIG. **6**. The data signal **22** to be transmitted is preferably encoded with a forward error correction code by a convolutional encoder **36**, typically comprising shift registers and modulo-2 adders. The encoded signal is then processed by an interleaver **38**. The interleaver **38** shuffles the bits into a random sequence thus making burst errors, which are common in a wireless communication system, appear to be random errors after deinterleaving. An interleaved data stream **39** is subsequently processed by an orthogonal encoder **40**. The orthogonal encoder **40** spreads the interleaved data stream by modulating it with orthogonal codes (i.e. Walsh codes). Spreaded data signals **46**, **48** are then passed through a complex spreading block **62** that multiplies the in-phase (I) and citriodora phase (Q) components of the spreaded signals with pseudo-random sequences. The output of the complex spreading block is coupled to a transmitter **76** that transmits encoded/spreaded signals **72**, **74** on a wideband or a narrow-band carrier frequency in accordance with the frequency overlay aspect of the present invention.

More detailed diagrams of the orthogonal encoder **40** are illustrated in FIGS. **7** and **8**. The topology of the encoder **40** may vary with the particular modulation scheme employed. For example, if Quadrature Phase Shift Keying (QPSK) modulation is used (shown in FIG. **7**), then the orthogonal encoder **40** preferably divides the interleaved data stream **39** into two data streams via a serial-to-parallel converter **42**. Each data stream is processed by an orthogonal spreading block **44**. The encoder **40** provides I&Q channel outputs **46**, **48** are provided by the encoder **40**. Alternatively, if Binary Phase Shift Keying (BPSK) modulation is used (as shown in FIG. **8**), then the interleaved data stream **39** is processed directly by the orthogonal spreading block **44** to provide I&Q channel outputs **46**, **48**. Those skilled in the art will recognize that with the QPSK modulation scheme shown in FIG. **7** the I channel **46** and the Q channel contain different information, whereas with the BPSK modulation scheme shown in FIG. **8** the I channel and Q channel contain identical, but phase shifted information.

In accordance with the present invention, for narrow-band signals/users, the orthogonal spreading block **44** directly maps the interleaved data stream **39** into the orthogonal code (i.e. Walsh code). Thus, a logical one maps to the orthogonal code and a logical zero maps to its binary complement or vice versa. For wideband signals/users the configuration of the orthogonal spreading block **44** corresponds to the ratio (M) of the wideband overlay signal chip rate to the narrow-band underlay signal chip rate. For M ratios that are substantially equal to an odd integer (e.g. three) the spreading block **44** is preferably configured as shown in FIG. **9**, and for substantially even M ratios the spreading block **44** is preferably configured as shown in FIG. **10**.

As shown by example in FIG. **9**, for an odd M ratio substantially equal to three, the interleaved data signal **39** is multiplied (scrambled) by a pseudo-random sequence **50** and is then divided into three data streams by a serial-to-parallel convertor **52**. Each of the data streams is processed by a Walsh spreading block **54** that encodes the data stream with a Walsh code selected in accordance with the present invention so that no orthogonal code is a prefix of any other orthogonal code assigned within a cell site. If the carrier frequencies for wideband overlay signals and narrow-band underlay signals cannot be precisely aligned or spaced in accordance with spectral overlay aspect of the present invention, then Walsh codes are preferably also selected so that the first common nodes are as close as possible to the root of the Walsh tree. Additionally, the Walsh codes used within the spreading blocks **54** may all be the same for a given user, or a user may have multiple codes assigned so that some or all of the spreading blocks **54** use different codes. The individually spreaded data streams are then recombined in a parallel-to-serial converter **56** that produces the I channel output **46** or Q channel output **48**.

As shown by example in FIG. **10**, for an even M ratio substantially equal to four, the interleaved data signal **39** is multiplied (scrambled) by a pseudo-random sequence **50** and is then divided into four data streams by a serial-to-parallel convertor **52**. Each of the data streams is processed by a Walsh spreading block **54** that encodes the data stream with a Walsh code selected in accordance with the present invention so that no orthogonal code is a prefix of any other orthogonal code assigned within a cell site. Additionally, the Walsh codes used within the spreading blocks **54** may all be the same for a given user, or a user may have multiple codes assigned so that some or all of the spreading blocks **54** use different codes. If the carrier frequencies for wideband overlay signals and narrow-band underlay signals cannot be precisely aligned or spaced in accordance with spectral overlay aspect of the present invention, then Walsh codes are preferably also selected so that the first common nodes are as close as possible to the root of the Walsh tree. The individually spreaded data streams are multiplied by an alternating bit sequence **60** (i.e. 1010101010 . . .) and then recombined in a parallel-to-serial converter **56** that produces the I channel output **46** or Q channel output **48**.

A more detailed diagram of the complex spreading block **62** is illustrated in FIG. **11**. For both wideband overlay signals and narrow-band underlay signals, the I channel **46** and Q channel **48** signals are multiplied by an I channel pseudo-random sequence **64** and a Q channel pseudo-random sequence **70** that are both clocked at the narrow-band chip rate. First and second pulse shaping filters **66**, **68** provide spreaded I and Q outputs **72**, **74** to the transmitter

76. Subsequently, the spreaded I and Q outputs are sent as a transmitted signal **78** to wideband users.

Thus, the above description embodies aspects of the present invention. Namely, a wireless communication system simultaneously transmits one or more wideband overlay signals and one or more narrow-band underlay signals by maintaining substantial orthogonality between wideband and narrow-band signals. Orthogonality is maximized, and thus interference between the wideband and narrow-band users is minimized by selectively aligning or spacing the narrow-band carrier frequency/frequencies in accordance with the spectral overlay aspect of the present invention, spreading signals with orthogonal codes particularly selected to minimize correlation between wideband and narrow-band users, and spreading the wideband signals by dividing them into a plurality of data streams, spreading the individual streams, and then recombining the data streams before transmission.

The above method and system of simultaneously transmitting variable chip rate signals are best applied to the synchronized forward link (from the base station to the mobile unit) within a wireless communication system such as the voice/cellular systems described above. However, it is inherently feasible to apply the teachings of the above system and method to the reverse link (i.e. from the mobile unit to the central unit), or more broadly to any communication system employing variable chip rate spread spectrum signals wherein it is desirable to reduce interference between users sharing a common frequency spectrum.

In summary, persons of ordinary skill in the art will readily appreciate that a system and method for transmitting wideband signals via a communications system adapted for transmitting narrow-band signals has been provided. In the accordance with the present invention, by systematically selecting/separating the orthogonal codes and the carrier frequencies **15** (as described above) used by base stations **10** and transceivers **14**, **18** in a CDMA system, wideband signals **16** can be transmitted substantially simultaneously with narrow-band signals **12**. Systems and apparatus implementing the teachings of the invention can enjoy increased efficiency in bandwidth utilization. In addition, existing communication systems can be inexpensively modified to employ the teachings of the invention without requiring modification to, or replacement of, consumer transmitters **14** such as cellular telephones. In other words, the system is backwards compatible. Further, a wideband system and a narrow-band system (i.e., one spread spectrum system supporting multiple chip rates) may share some common signaling (e.g., control signaling), thereby allowing for seamless hand-offs between the two systems. Still further, having variable chip rates in one system may be desirable for enhancing the system performance of a multimedia network. For instance, by excessively spreading the bandwidth of a low rate service, such as voice service, the capability of multipath tracking and channel estimation is reduced. This incurs implementation loss for the low rate services.

Another benefit of the proposed spreading method can reduce the interference (both self interference and other-users interference) in a multipath communication environment. In a typical radio communication environment, radio signals are reflected from many different features of the physical environment. As a result, a signal arrives at a mobile station receiver from many directions with different transmission delays. When the mobile receiver tunes to one of the multipaths, the other paths represent interference. This interference includes the replica of other users and the designated user's signal. An inherent advantage of the spreading scheme presented can mitigate the multipath interference. Besides CDMA systems, this spreading scheme thus may benefit other spread spectrum communication systems.

The foregoing description has been presented for the purposes of illustration and description. It is not intended to be exhaustive or to limit the invention to the precise form disclosed. Many modifications and variations are possible in light of the above teachings. It is intended that the scope of the invention be limited not by this detailed description, but rather by the claims appended hereto.

The invention claimed is:

1. A method comprising:

spreading one or more narrow-band carrier frequency signals and a wideband carrier frequency signal using orthogonal codes, wherein the one or more narrow-band carrier frequency signals are aligned with respect to the wideband carrier frequency signal according to an offset, and wherein a ratio of a wideband chip rate of the wideband carrier frequency and a chip rate of the one or more narrow-band carrier frequency signals is not 2^n; and

further spreading the wideband carrier frequency signal into a plurality of data streams, wherein each of the data streams are spread individually, the data streams being recombined prior to transmission,

wherein every other bit of the data streams is inverted.

2. A method according to claim **1**, wherein the offset is by an integer multiple of a chip rate associated with the one or more narrow-band carrier frequency signals, or by the integer multiple of a chip rate plus one-half of the chip rate.

3. A method according to claim **1**, wherein the orthogonal codes include Walsh codes.

4. A method according to claim **1**, wherein the narrow-band carrier frequency signals are overlaid by another wideband carrier frequency signal.

5. A method according to claim **1**, wherein the narrow-band carrier frequency signal and the wideband carrier frequency signal are encoded using turbo coding or convolutional coding.

6. A method according to claim **1**, further comprising:

transmitting the recombined data streams to a narrow-band device and a wideband device.

7. A method according to claim **1**, wherein the narrow-band carrier frequency signals include digitally encoded voice signals or short data messages, and the wideband carrier frequency signal includes an analog video signal, a digitally encoded video signal, or a long data message.

8. An apparatus comprising:

a spreader configured to spread one or more narrow-band carrier frequency signals and a wideband carrier frequency signal using orthogonal codes, wherein the one or more narrow-band carrier frequency signals are aligned with respect to the wideband carrier frequency signal according to an offset, and wherein a ratio of a wideband chip rate of the wideband carrier frequency signal and a chip rate of the one or more narrow-band carrier frequency signals is not 2^n,

wherein the spreader is configured to further spread the wideband carrier frequency signal into a plurality of data streams, the data streams being recombined prior to transmission,

wherein every other bit of the data streams is inverted.

9. An apparatus according to claim **8**, wherein the offset is by an integer multiple of a chip rate associated with the one or more narrow-band carrier frequency signals, or by the integer multiple of a chip rate plus one-half of the chip rate.

10. An apparatus according to claim **8**, wherein the orthogonal codes include Walsh codes.

11. An apparatus according to claim **8**, wherein the narrow-band carrier frequency signals are overlaid by another wideband carrier frequency signal.

12. An apparatus according to claim **8**, wherein the narrow-band carrier frequency signal and the wideband carrier frequency signal are encoded using turbo coding or convolutional coding.

13. An apparatus according to claim **8**, further comprising:

a transceiver configured to transmit the recombined data streams to a narrow-band device and a wideband device.

14. An apparatus according to claim **13**, wherein the narrow-band device includes a mobile unit.

15. An apparatus according to claim **8**, wherein the narrow-band carrier frequency signals include digitally encoded voice signals or short data messages, and the wideband carrier frequency signal includes an analog video signal, a digitally encoded video signal, or a long data message.

16. An apparatus according to claim **8**, wherein the apparatus is a base station or a computer.

* * * * *